Cat. No. W664-E1-01

SYSMAC CJ Series

CJ3M-CPU□□

CJ3 CPU Unit Hardware

USER'S MANUAL

OMRON

NOTE

All rights reserved. No part of this publication may be reproduced, stored in a retrieval system, or transmitted, in any form, or by any means, mechanical, electronic, photocopying, recording, or otherwise, without the prior written permission of OMRON.

No patent liability is assumed with respect to the use of the information contained herein. Moreover, because OMRON is constantly striving to improve its high-quality products, the information contained in this manual is subject to change without notice. Every precaution has been taken in the preparation of this manual. Nevertheless, OMRON assumes no responsibility for errors or omissions. Neither is any liability assumed for damages resulting from the use of the information contained in this publication.

Trademarks

- Sysmac and SYSMAC are trademarks or registered trademarks of OMRON Corporation in Japan and other countries for OMRON factory automation products.
- CX-One is a registered trademark for Programming Software made by OMRON Corporation.
- Microsoft, Windows, Excel, Visual Basic, and Microsoft Edge are either registered trademarks or trademarks of Microsoft Corporation in the United States and other countries.
- EtherCAT® is a registered trademark and patented technology, licensed by Beckhoff Automation GmbH, Germany.
- ODVA, CIP, CompoNet, DeviceNet, and EtherNet/IP are trademarks of ODVA.
- The SD and SDHC logos are trademarks of SD-3C, LLC.

Other company names and product names in this document are the trademarks or registered trademarks of their respective companies.

Copyrights

- Microsoft product screen shots used with permission from Microsoft.
- This product incorporates certain third party software. The license and copyright information associated with this software is available at https://www.fa.omron.co.jp/product/tool/cj-info/index_en.html.

SYSMAC CJ Series
CJ3M-CPU□□
CJ3 CPU Unit Hardware

User's Manual

Revised October 2026

Introduction

Thank you for purchasing a CJ-series CJ3M-CPU□□ Programmable Controller. This manual contains information required to use the CJ3M-CPU□□. Please thoroughly read and understand this manual before you use the CJ3M-CPU□□.

Intended Audience

This manual is intended for the following personnel, who must also have knowledge of electrical systems (an electrical engineer or the equivalent).

- Personnel in charge of installing FA systems
- Personnel in charge of designing FA systems.
- Personnel in charge of installing and connecting FA systems
- Personnel in charge of managing FA systems and facilities.

Applicable Products

CJ-series CJ3 CPU Units

- CJ3M-CPU1□
- CJ3M-CPU3□

In this manual, the following notation is used to indicate the CPU Units.

- CJ3M-CPU□□: Indicates the CJ3M-CPU1□/3□.

Optional Pulse I/O Modules can be used for pulse I/O with a CJ3M CPU Unit.

CJ3 CPU Unit Manuals

Information on the CJ3 CPU Units is provided in the following manuals. Refer to the appropriate manual for the information that is required.

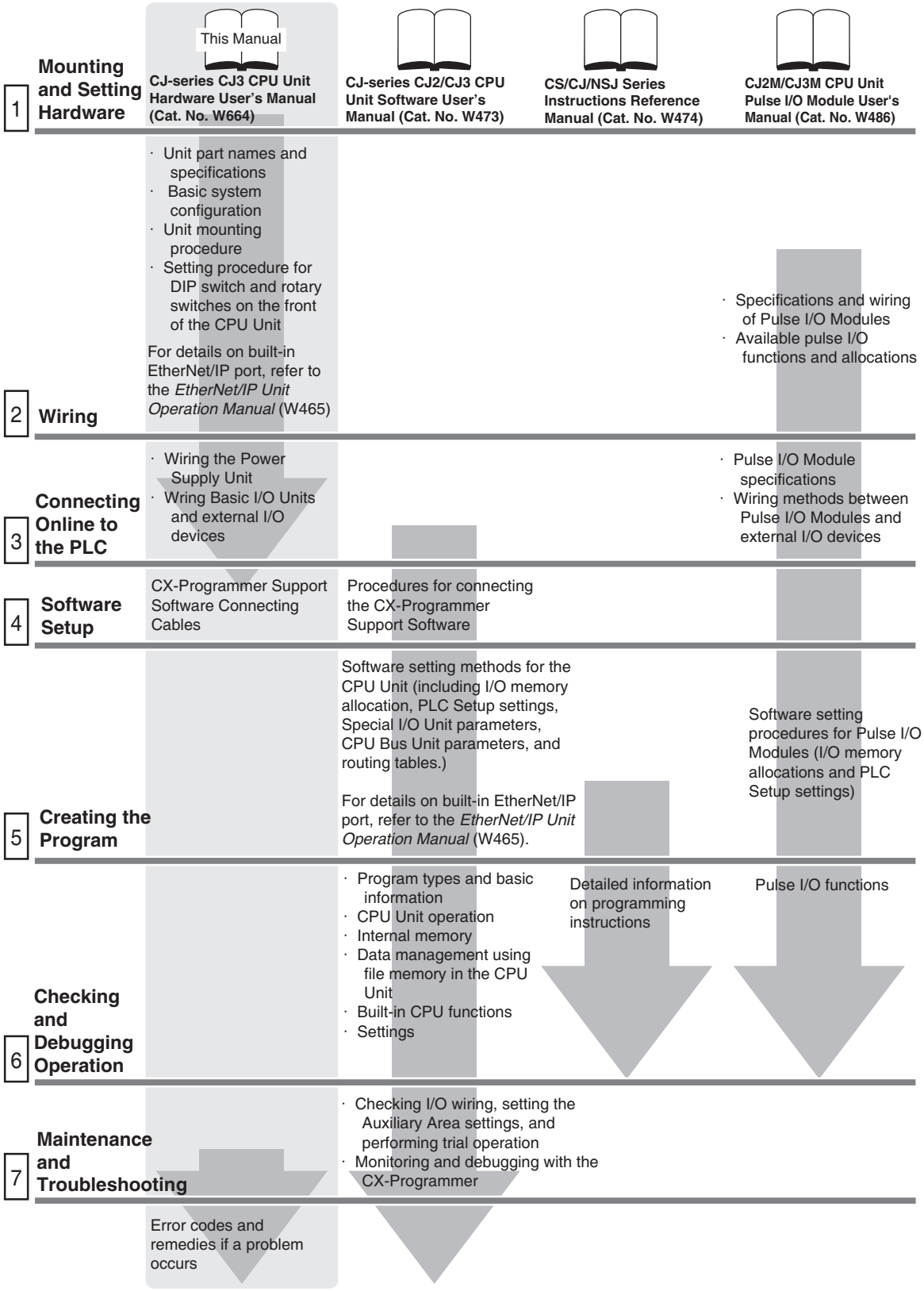

Manual Configuration

The CJ3 CPU manuals are organized in the sections listed in the following tables. Refer to the appropriate section in the manuals as required.

CJ3 Hardware User's Manual (W664) (This Manual)

Section	Content
Section 1 Overview	This section gives an overview of the CJ3 CPU Units and describes the features and specifications.
Section 2 Basic System Configuration and Devices	This section describes the system configuration for the CJ3 CPU Unit.
Section 3 Nomenclature and Functions	This section describes the part names and functions of the CPU Unit and Configuration Units.
Section 4 Support Software	This section describes the types of Support Software to use to perform programming and debugging and how to connect the PLC to the Support Software.
Section 5 Installation	This section describes the installation locations and how to wire CPU Units and Configuration Units.
Section 6 Troubleshooting	This section describes how to check the status for errors that occur during system operation and the remedies for those errors.
Section 7 Inspection and Maintenance	This section describes periodic inspection, the service life of the Battery and Power Supply Unit, and how to replace the Battery.
Section 8 Backup Operations	This section describes the procedure to back up PLC data.
Appendices	The appendices provide Unit dimensions, details on fatal and non-fatal errors, information on connecting to serial ports on the CPU Unit, the procedure for installing the USB driver on a computer, and information on load short-circuit protection and line disconnection detection.

CJ2/CJ3 Software User's Manual (W473)

Section	Content
Section 1 Overview	This section gives an overview of the CJ2/CJ3 CPU Units and describes the features and specifications.
Section 2 Internal Memory in the CPU Unit	This section describes the types of memory in the CPU Unit and the data that is stored.
Section 3 CPU Unit Operation	This section describes the internal operation of the CPU Unit.
Section 4 CPU Unit Initialization	This section describes the initial setup of the CPU Unit.
Section 5 Understanding Programming	This section describes program types and programming details, such as symbols and programming instructions.
Section 6 I/O Memory Areas	This section describes the I/O memory areas in the CPU Unit.
Section 7 File Operations	This section describes the files that can be stored in the CPU Unit, the storage destination for those files, and file operations.
Section 8 I/O Allocations and Unit Settings	This section describes the I/O allocations used to exchange data between the CPU Unit and other Units.
Section 9 PLC Setup	This section describes details on the PLC Setup settings, which are used to perform basic settings for the CPU Unit.
Section 10 CPU Unit Functions	This section describes functions that are built into the CPU Unit.
Section 11 Programming Devices and Communications	This section describes the procedure for connecting the CPU Unit to the CX-Programmer or other Support Software and to other devices.
Section 12 CPU Unit Cycle Time	This section describes how to monitor and calculate the cycle time.
Appendices	The appendices provide information on programming instructions, execution times, number of steps, Auxiliary Area words and bits, a memory map of the continuous PLC memory addresses, I/O memory operation when power is interrupted, and a comparison of CJ-series and CS-series PLCs.

Instructions Reference Manual (W474)

Section	Content
Section 1 Basic Understanding of Instructions	This section provides basic information on designing ladder programs for a CS/CJ/NSJ-series CPU Unit.
Section 2 Summary of Instructions	This section provides a summary of instructions used with a CS/CJ/NSJ-series CPU Unit.
Section 3 Instructions	This section describes the functions, operands and sample programs of the instructions that are supported by a CS/CJ/NSJ-series CPU Unit.
Section 4 Instruction Execution Times and Number of Steps	This section provides the instruction execution times for each CS/CJ/NSJ-series CPU Unit instruction.
Appendices	The appendices provide a list of instructions by function code and by mnemonic and an ASCII table for the CS/CJ/NSJ-series CPU Units.

CJ2M/CJ3M Pulse I/O Module User's Manual (W486)

Section	Content
Section 1 Overview	This section gives an overview of the Pulse I/O Modules and the pulse I/O functions of the CJ2M/CJ3M.
Section 2 I/O Application Procedures and Function Allocations	This section lists the pulse functions of the CJ2M CPU Units and describes the overall application flow and the allocation of the functions.
Section 3 I/O Specifications and Wiring for Pulse I/O Modules	This section provides the I/O specifications and describes the wiring of the Pulse I/O Module.
Section 4 General-purpose I/O	This section describes the general-purpose I/O.
Section 5 Quick-response Inputs	This section describes the quick-response function that can be used to input signals that are shorter than the cycle time.
Section 6 Interrupts	This section describes the interrupt input function.
Section 7 High-speed Counters	This section describes the high-speed counter inputs and high-speed counter interrupts.
Section 8 Pulse Outputs	This section describes positioning functions, such as trapezoidal control, S-curve control, jogging, and origin search functions.
Section 9 PWM Outputs	This section describes the variable-duty-factor (PWM) outputs.
Appendices	The appendices provide a table of flag changes for pulse outputs, a comparison table with other models, and a performance table.

Manual Structure

Page Structure

The following page structure is used in this manual.

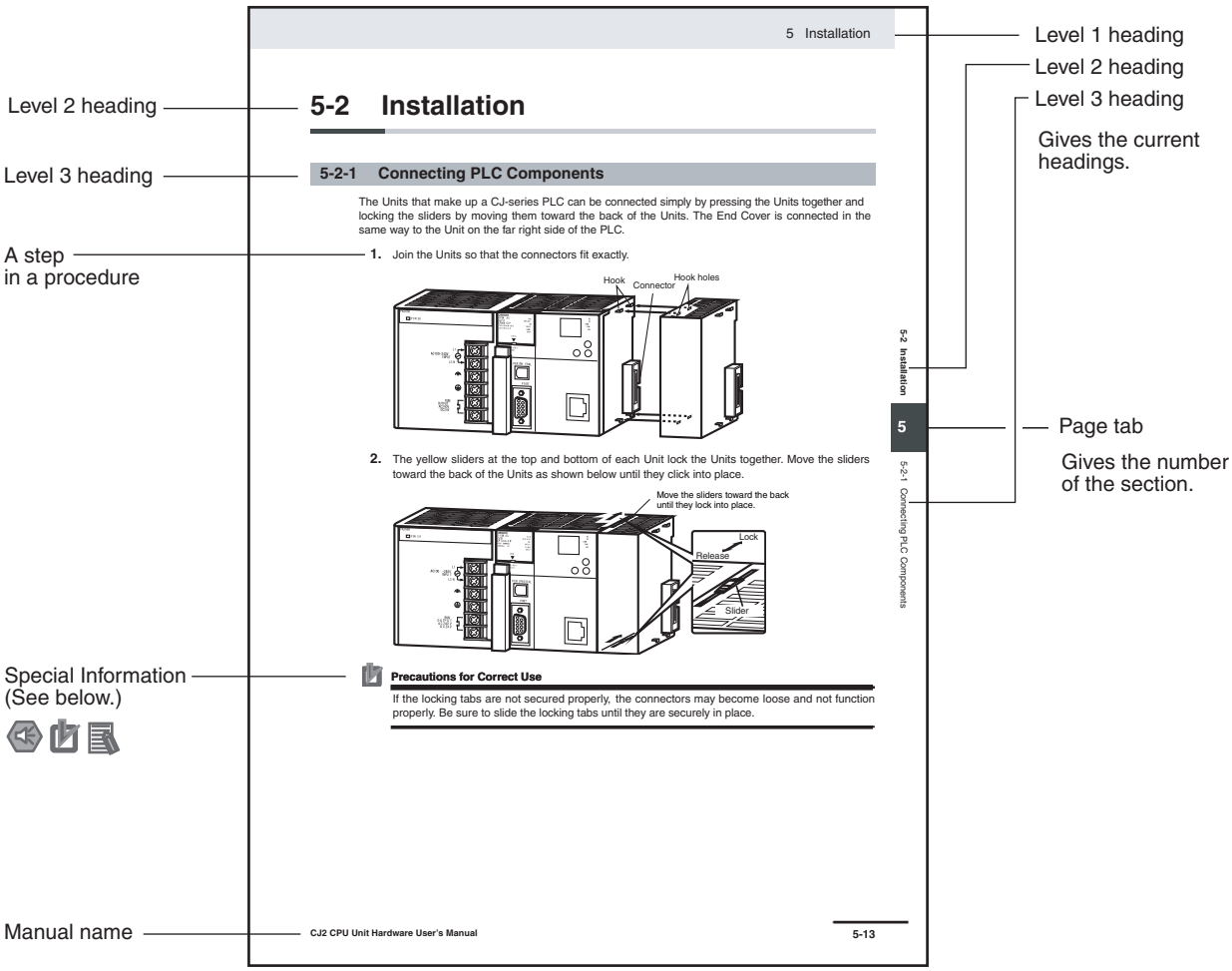

This illustration is provided only as a sample and may not literally appear in this manual.

Special Information

Special information in this manual is classified as follows:

Precautions for Safe Use

Precautions on what to do and what not to do to ensure using the product safely.

Precautions for Correct Use

Precautions on what to do and what not to do to ensure proper operation and performance.

Additional Information

Additional information to increase understanding or make operation easier.

Sections in this Manual

1 Overview

2 Basic System Configuration and Devices

3 Nomenclature and Functions

4 Support Software

5 Installation

6 Troubleshooting

7 Inspection and Maintenance

8 Backup Operations

A Appendices

CONTENTS

Introduction **1**

CJ3 CPU Unit Manuals **2**

Manual Structure **5**

Sections in this Manual **7**

Terms and Conditions Agreement **13**

Safety Precautions **15**

Application Precautions **21**

Operating Environment Precautions **26**

Regulations and Standards **27**

Protective Countermeasures Against Security Threats **29**

Unit Versions **31**

Related Manuals **35**

Sec. 1 Overview 1-1

1-1 Overview of CJ3 CPU Units **1-2**
- 1-1-1 CJ3 CPU Unit Features 1-2
- 1-1-2 Functions Enhanced on the CJ3M CPU Unit 1-8

1-2 Basic Operating Procedure **1-9**

1-3 Specifications **1-10**
- 1-3-1 General Specifications 1-10
- 1-3-2 Performance Specifications 1-11
- 1-3-3 Function Specifications 1-17

Sec. 2 Basic System Configuration and Devices 2-1

2-1 Basic System Configuration **2-2**
- 2-1-1 Basic System Configuration 2-2
- 2-1-2 CPU Rack 2-3
- 2-1-3 Expansion Racks 2-8
- 2-1-4 Configuration Units 2-11
- 2-1-5 Calculating Unit Current Consumption 2-20
- 2-1-6 Calculating Power Consumption 2-22

2-2 Expanded System Configuration **2-24**
- 2-2-1 Serial Communications 2-24
- 2-2-2 Communications Networks 2-26

Sec. 3 Nomenclature and Functions 3-1

3-1 CPU Units **3-2**

3-1-1 CPU Section ... 3-2
3-1-2 Built-in EtherNet/IP Section ... 3-8

3-2 Memory Card ... 3-13
3-2-1 Models and Specifications ... 3-13
3-2-2 Operating Procedures ... 3-13
3-2-3 Installing and Removing ... 3-14

3-3 Pulse I/O Modules ... 3-16
3-3-1 Models and Specifications ... 3-16
3-3-2 Part Names and Functions ... 3-16

3-4 Power Supply Units ... 3-19
3-4-1 Models and Specifications ... 3-19
3-4-2 Components ... 3-22
3-4-3 Selecting a Power Supply Unit ... 3-25

3-5 CJ-series Basic I/O Units ... 3-26
3-5-1 Basic I/O Units with Terminal Blocks ... 3-26
3-5-2 Thirty-two/Sixty-four-point Basic I/O Units with Connectors ... 3-28

3-6 I/O Control Units and I/O Interface Units ... 3-30
3-6-1 Component Names ... 3-30
3-6-2 System Configuration ... 3-30

Sec. 4 Support Software ... 4-1

4-1 Support Software ... 4-2
4-1-1 CX-One FA Integrated Tool Package ... 4-2

4-2 Connection Methods ... 4-6
4-2-1 Connecting by USB ... 4-6
4-2-2 Connecting by RS-232C ... 4-8
4-2-3 Connecting to Ethernet ... 4-10

Sec. 5 Installation ... 5-1

5-1 Fail-safe Circuits ... 5-2

5-2 Installation ... 5-4
5-2-1 Installation and Wiring Precautions ... 5-4
5-2-2 Installation in a Control Panel ... 5-6
5-2-3 Assembled Appearance and Dimensions ... 5-8
5-2-4 Connecting PLC Components ... 5-12
5-2-5 DIN Track Installation ... 5-14
5-2-6 Connecting CJ-series Expansion Racks ... 5-16

5-3 Wiring ... 5-19
5-3-1 Power Supply Wiring ... 5-19
5-3-2 Wiring CJ-series Basic I/O Units with Terminal Blocks ... 5-26
5-3-3 Wiring Basic I/O Units with Connectors ... 5-28
5-3-4 Connecting to Connector-Terminal Block Conversion Units or I/O Relay Terminals ... 5-32
5-3-5 Connecting Pulse I/O Modules to External I/O Devices ... 5-32
5-3-6 Connecting I/O Devices ... 5-34
5-3-7 Wiring of Ethernet Cable ... 5-38

5-4 Control Panel Installation ... 5-41
5-4-1 Temperature ... 5-41
5-4-2 Humidity ... 5-43
5-4-3 Vibration and Shock ... 5-43
5-4-4 Atmosphere ... 5-43
5-4-5 Electrical Environment ... 5-44
5-4-6 Grounding ... 5-49

Sec. 6 Troubleshooting 6-1

6-1 CPU Unit Errors 6-2
6-1-1 Errors and Remedies 6-2
6-1-2 Checking Errors 6-2
6-1-3 Checking Detailed Status 6-3
6-1-4 Reading Error Log Information 6-3
6-1-5 I/O Table Verification 6-5
6-1-6 Types of Errors 6-6
6-1-7 Handling Errors 6-7

6-2 Troubleshooting Built-in EtherNet/IP Port Errors 6-23
6-2-1 Checking Built-in EtherNet/IP Port Error Status 6-23
6-2-2 Checking Error Status at the EtherNet/IP Port Seven-segment Display 6-24

6-3 Non-CPU Unit Errors and Remedies 6-26
6-3-1 Error Causes and Remedies 6-26

Sec. 7 Inspection and Maintenance 7-1

7-1 Inspections 7-2
7-1-1 Inspection Points 7-2
7-1-2 Unit Replacement Precautions 7-4

7-2 Replacing the Battery 7-5
7-2-1 Battery Replacement 7-5

7-3 Power Supply Unit Replacement Time 7-8

Sec. 8 Backup Operations 8-1

8-1 Backing Up Data 8-2

8-2 Using a Computer to Back Up Data 8-3
8-2-1 PLC Backup Tool 8-3
8-2-2 PLC Backup Tool Operations 8-4
8-2-3 Backup File Encryption 8-7

8-3 Simple Backup 8-9
8-3-1 Overview 8-9
8-3-2 Operating Procedures 8-10
8-3-3 Verifying Backup Operations with Indicators 8-12
8-3-4 Verifying Backup Operations with Indicators 8-13
8-3-5 Related Auxiliary Bits/Words 8-15
8-3-6 Time Required for Simple Backup 8-15
8-3-7 Data Backed Up Using Simple Backup 8-16

Appendices A-1

A-1 Specifications of Basic I/O Units A-3
A-1-1 Overview of Units A-3
A-1-2 Basic I/O Units A-5
A-1-3 Precautions on Contact Output Units A-62
A-1-4 Connecting Connector-Terminal Block Conversion Units and I/O Relay Terminals A-64

A-2 Dimensions A-83
A-2-1 CJ3M CPU Units A-83
A-2-2 Power Supply Units A-84
A-2-3 Basic I/O Units A-86
A-2-4 I/O Control Unit and I/O Interface Unit A-89
A-2-5 I/O Memory Card A-89
A-2-6 Pulse I/O Modules A-89

A-2-7 B7A Interface Unit A-90

A-3 Fatal and Non-fatal Error Details A-91
A-3-1 Fatal Errors A-91
A-3-2 Non-fatal Errors A-99

A-4 Connecting to a Serial Port on the CPU Unit A-102
A-4-1 Serial Port Interface Types and Specifications A-102
A-4-2 Connection Examples A-107
A-4-3 Applicable Connectors and Recommended Cables A-114

A-5 Load Short-circuit Protection and Line Disconnection Detection for Basic I/O Units ...A-121
A-5-1 Load Short-circuit Protection and Line Disconnection Detection for CJ1W-OD202 ....A-121
A-5-2 Load Short-circuit Protection for CJ1W-OD204/OD212/OD232/MD232 ....A-123

A-6 Relay Output Noise Reduction Methods A-125

A-7 Deleting Data when Disposing of the Unit A-127
A-7-1 Target and Data to Delete A-127
A-7-2 Deleting the Data of the CPU Function A-127
A-7-3 Deleting the Data of the Built-in EtherNet/IP Function A-129

A-8 B7A Interface Unit A-131
A-8-1 Overview A-131
A-8-2 System Configuration A-131
A-8-3 Models A-131
A-8-4 B7A Communications Specifications A-132
A-8-5 Common Specifications A-133
A-8-6 I/O Memory Allocations A-133
A-8-7 Transmission Error Processing A-133
A-8-8 Parts and Names A-135
A-8-9 Preparing and Connecting Cables A-137
A-8-10 Connection Diagrams A-139

A-9 Installing the USB Driver A-142

Index Index-1

Revision History Revision-1

Terms and Conditions Agreement

Warranty, Limitations of Liability

Warranties

- **Exclusive Warranty**

  Omron's exclusive warranty is that the Products will be free from defects in materials and workmanship for a period of twelve months from the date of sale by Omron (or such other period expressed in writing by Omron). Omron disclaims all other warranties, express or implied.

- **Limitations**

  OMRON MAKES NO WARRANTY OR REPRESENTATION, EXPRESS OR IMPLIED, ABOUT NON-INFRINGEMENT, MERCHANTABILITY OR FITNESS FOR A PARTICULAR PURPOSE OF THE PRODUCTS. BUYER ACKNOWLEDGES THAT IT ALONE HAS DETERMINED THAT THE PRODUCTS WILL SUITABLY MEET THE REQUIREMENTS OF THEIR INTENDED USE.

  Omron further disclaims all warranties and responsibility of any type for claims or expenses based on infringement by the Products or otherwise of any intellectual property right.

- **Buyer Remedy**

  Omron's sole obligation hereunder shall be, at Omron's election, to (i) replace (in the form originally shipped with Buyer responsible for labor charges for removal or replacement thereof) the non-complying Product, (ii) repair the non-complying Product, or (iii) repay or credit Buyer an amount equal to the purchase price of the non-complying Product; provided that in no event shall Omron be responsible for warranty, repair, indemnity or any other claims or expenses regarding the Products unless Omron's analysis confirms that the Products were properly handled, stored, installed and maintained and not subject to contamination, abuse, misuse or inappropriate modification. Return of any Products by Buyer must be approved in writing by Omron before shipment. Omron Companies shall not be liable for the suitability or unsuitability or the results from the use of Products in combination with any electrical or electronic components, circuits, system assemblies or any other materials or substances or environments. Any advice, recommendations or information given orally or in writing, are not to be construed as an amendment or addition to the above warranty.

See http://www.omron.com/global/ or contact your Omron representative for published information.

Limitation on Liability; Etc

OMRON COMPANIES SHALL NOT BE LIABLE FOR SPECIAL, INDIRECT, INCIDENTAL, OR CONSEQUENTIAL DAMAGES, LOSS OF PROFITS OR PRODUCTION OR COMMERCIAL LOSS IN ANY WAY CONNECTED WITH THE PRODUCTS, WHETHER SUCH CLAIM IS BASED IN CONTRACT, WARRANTY, NEGLIGENCE OR STRICT LIABILITY.

Further, in no event shall liability of Omron Companies exceed the individual price of the Product on which liability is asserted.

Application Considerations

Suitability of Use

Omron Companies shall not be responsible for conformity with any standards, codes or regulations which apply to the combination of the Product in the Buyer's application or use of the Product. At Buyer's request, Omron will provide applicable third party certification documents identifying ratings and limitations of use which apply to the Product. This information by itself is not sufficient for a complete determination of the suitability of the Product in combination with the end product, machine, system, or other application or use. Buyer shall be solely responsible for determining appropriateness of the particular Product with respect to Buyer's application, product or system. Buyer shall take application responsibility in all cases.

NEVER USE THE PRODUCT FOR AN APPLICATION INVOLVING SERIOUS RISK TO LIFE OR PROPERTY WITHOUT ENSURING THAT THE SYSTEM AS A WHOLE HAS BEEN DESIGNED TO ADDRESS THE RISKS, AND THAT THE OMRON PRODUCT(S) IS PROPERLY RATED AND INSTALLED FOR THE INTENDED USE WITHIN THE OVERALL EQUIPMENT OR SYSTEM.

Programmable Products

Omron Companies shall not be responsible for the user's programming of a programmable Product, or any consequence thereof.

Disclaimers

Performance Data

Data presented in Omron Company websites, catalogs and other materials is provided as a guide for the user in determining suitability and does not constitute a warranty. It may represent the result of Omron's test conditions, and the user must correlate it to actual application requirements. Actual performance is subject to the Omron's Warranty and Limitations of Liability.

Change in Specifications

Product specifications and accessories may be changed at any time based on improvements and other reasons. It is our practice to change part numbers when published ratings or features are changed, or when significant construction changes are made. However, some specifications of the Product may be changed without any notice. When in doubt, special part numbers may be assigned to fix or establish key specifications for your application. Please consult with your Omron's representative at any time to confirm actual specifications of purchased Product.

Errors and Omissions

Information presented by Omron Companies has been checked and is believed to be accurate; however, no responsibility is assumed for clerical, typographical or proofreading errors or omissions.

Safety Precautions

Definition of Precautionary Information

The following notation is used in this manual to provide precautions required to ensure safe usage of a CJ-series PLC. The safety precautions that are provided are extremely important to safety. Always read and heed the information provided in all safety precautions.

WARNING	Indicates a potentially hazardous situation which, if not avoided, could result in death or serious injury. Additionally, there may be severe property damage.
Caution	Indicates a potentially hazardous situation which, if not avoided, may result in minor or moderate injury, or property damage.

Precautions for Safe Use
Indicates precautions on what to do and what not to do to ensure using the product safely.

Precautions for Correct Use
Indicates precautions on what to do and what not to do to ensure proper operation and performance.

Symbols

The triangle symbol indicates precautions (including warnings). The specific operation is shown in the triangle and explained in text. This example indicates a precaution for electric shock.

The circle and slash symbol indicates operations that you must not do. The specific operation is shown in the circle and explained in text.

The filled circle symbol indicates operations that you must do. The specific operation is shown in the circle and explained in text. This example shows a general precaution for something that you must do.

The triangle symbol indicates precautions (including warnings). The specific operation is shown in the triangle and explained in text. This example indicates a general precaution.

The triangle symbol indicates precautions (including warnings). The specific operation is shown in the triangle and explained in text. This example indicates a precaution for hot surfaces.

⚠ WARNING

Do not attempt to take any Unit apart or touch the inside of any Unit while the power is being supplied. Doing so may result in electric shock.

Do not touch any of the terminals or terminal blocks while the power is being supplied. Doing so may result in electric shock.

Provide safety measures in external circuits (i.e., not in the Programmable Controller), including the following items, to ensure safety in the system if an abnormality occurs due to malfunction of the Programmable Controller or another external factor affecting the operation of the Programmable Controller. “Programmable Controller” indicates the CPU Unit and all other Units and is abbreviated “PLC” in this manual. Not doing so may result in serious accidents.

- Emergency stop circuits, interlock circuits, limit circuits, and similar safety measures must be provided in external control circuits.
- The PLC will turn OFF all outputs when its self-diagnosis function detects any error or when a severe failure alarm (FALS) instruction is executed. Unexpected operation, however, may still occur for errors in the I/O control section, errors in I/O memory, and other errors that cannot be detected by the self-diagnosis function. As a countermeasure for all such errors, external safety measures must be provided to ensure safety in the system.
- The PLC outputs may remain ON or OFF due to deposition or burning of the output relays or destruction of the output transistors. As a countermeasure for such problems, external safety measures must be provided to ensure safety in the system.
- Provide measures in the computer system and programming to ensure safety in the overall system even if communications errors or malfunctions occur in data link communications or remote I/O communications.

Confirm safety before transferring data files stored in the file memory (Memory Card or EM file memory) to the I/O area (CIO) of the CPU Unit using a peripheral tool. Otherwise, the devices connected to the output unit may malfunction regardless of the operation mode of the CPU Unit.

Fail-safe measures must be taken by the customer to ensure safety in the event of incorrect, missing, or abnormal signals caused by broken signal lines, momentary power interruptions, or other causes. Serious accidents may result from abnormal operation if proper measures are not provided.

Do not apply a voltage or current outside the specified range to the PLC.

Doing so may cause a malfunction or fire.

⚠ WARNING

Anti-virus protection

Install the latest commercial-quality antivirus software on the computer connectedto the control system and maintain to keep the software up-to-date.

Security measures to prevent unauthorized access

Take the following measures to prevent unauthorized access to our products.

- Install physical controls so that only authorized personnel can access control systems and equipment.
- Reduce connections to control systems and equipment via networks to prevent access from untrusted devices.
- Install firewalls to shut down unused communications ports and limit communications hosts and isolate control systems and equipment from the IT network.
- Use a virtual private network (VPN) for remote access to control systems and equipment.
- Adopt multifactor authentication to devices with remote access to control systems and equipment.
- Set strong passwords and change them frequently.
- Scan virus to ensure safety of USB drives or other external storages before connecting them to control systems and equipment.

Data input and output protection

Validate backups and ranges to cope with unintentional modification of input/output data to control systems and equipment.

- Checking the scope of data
- Checking validity of backups and preparing data for restore in case of falsification and abnormalities
- Safety design, such as emergency shutdown and fail-soft operation in case of data tampering and abnormalities

Data recovery

Backup data and keep the data up-to-date periodically to prepare for data loss.

⚠ WARNING

When constructing an intranet, communication failure may occur due to cable disconnection or the influence of unauthorized network equipment. Take adequate measures, such as restricting physical access to network devices, by means such as locking the installation area.

When using a device equipped with the SD Memory Card function, there is a security risk that a third party may acquire, alter, or replace the files and data in the removable media by removing the removable media or unmounting the removable media.

Please take sufficient measures, such as restricting physical access to the Controller or taking appropriate management measures for removable media, by means of locking the installation area, entrance management, etc., by yourself.

⚠ Caution

Execute online edit only after confirming that no adverse effects will be caused by extending the cycle time. Otherwise, the input signals may not be readable.

Confirm safety at the destination node before transferring a program, PLC Setup, I/O tables, I/O memory contents, or parameters to another node or changing contents of the any of these items. Transferring or changing data can result in unexpected system operation.

Tighten the terminal screws on the AC Power Supply Unit to the torque specified in the operation manual. The loose screws may result in burning or malfunction.

Do not touch the Power Supply Unit when power is being supplied or immediately after the power supply is turned OFF. The Power Supply Unit will be hot and you may be burned.

When connecting a personal computer or other peripheral device to a PLC to which a non-insulated Power Supply Unit (CJ1W-PD022) is mounted, either ground the 0 V side of the external power supply or do not ground the external power supply at all ground. A short-circuit will occur in the external power supply if incorrect grounding methods are used. Never ground the 24 V side, as shown below.

Wiring in Which the 24-V Power Supply Will Short

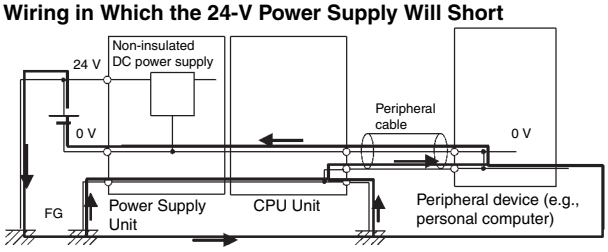

Pay careful attention to the polarities (+/-) when wiring the DC power supply. A wrong connection may cause malfunction of the system.

After programming (or re-programming) using the IOWR instruction, confirm that correct operation is possible with the new ladder program and data before starting actual operation. Any irregularities may cause the product to stop operating, resulting in unexpected operation in machinery or equipment.

Application Precautions

Observe the following precautions when using a CJ-series PLC.

Power Supply

- Always use the power supply voltages specified in the user's manuals. An incorrect voltage may result in malfunction or burning.
- Exceeding the capacity of the Power Supply Unit may prevent the CPU Unit or other Units from starting.
- Take appropriate measures to ensure that the specified power with the rated voltage and frequency is supplied. Be particularly careful in places where the power supply is unstable. An incorrect power supply may result in malfunction.
- Always turn OFF the power supply to the PLC before attempting any of the following. Not turning OFF the power supply may result in malfunction or electric shock.
  - Mounting or dismounting Power Supply Units, I/O Units, CPU Units, Pulse I/O Modules or any other Units.
  - Assembling the Units.
  - Setting DIP switches or rotary switches.
  - Connecting cables or wiring the system.
  - Connecting or disconnecting the connectors.
- When cross-wiring terminals, the total current for all the terminal will flow in the wire. Make sure that the current capacity of the wire is sufficient.
- Observe the following precautions when using a Power Supply Unit that supports the Replacement Notification Function.
  - Replace the Power Supply Unit within six months if the display on the front of the Power Supply Unit alternates between 0.0 and A02, or if the alarm output automatically turns OFF.
  - Keep the alarm output cable separated from power line and high-voltage lines.
  - Do not apply a voltage or connect a load exceeding the specifications to the alarm output.
  - When storing the Power Supply Unit for more than three months, store it at –20 to 30°C and 25% to 70% humidity to preserve the Replacement Notification Function.
  - If the Power Supply Unit is not installed properly, heat buildup may cause the replacement notification signal to appear at the wrong time or may cause interior elements to deteriorate or become damaged. Use only the standard installation method.
- Do not touch the terminals on the Power Supply Unit immediately after turning OFF the power supply. Residual voltage may cause electrical shock.
- Observe the following precautions to prevent failure due to difference in electrical potential if the computer is connected to the PLC.
  - Before connecting a laptop computer to the PLC, disconnect the power supply plug of the computer from the AC outlet. Residual current in the AC adaptor may cause difference in electrical potential to occur between the computer and the PLC. After you connect the computer and PLC, supply the power again from the AC adaptor.
  - If the computer has an FG terminal, make the connections so that it has the same electrical potential as the FG (GR) terminal on the PLC.
- If the computer is grounded to a separate location, difference in electrical potential may occur depending on the grounding conditions.
- If full voltage is applied or cut off using a switch during a withstand voltage test, the resulting impulse voltage could potentially damage the power supply unit. Please gradually adjust the applied voltage using the test equipment's voltage control knob.
- Do not allow foreign matter to enter the openings in the Unit. Doing so may result in Unit burning, electric shock, or failure.

Installation

- Before touching a Unit, be sure to first touch a grounded metallic object in order to discharge any static build-up. Not doing so may result in malfunction or damage.
- Be sure that the terminal blocks, connectors, Memory Cards, Pulse I/O Modules, expansion cables, and other items with locking devices are properly locked into place.
- The sliders on the tops and bottoms of the Power Supply Unit, CPU Unit, I/O Units, Special I/O Units, CPU Bus Units, and Pulse I/O Modules must be completely locked (until they click into place) after connecting to adjacent Units.
  The Unit may not operate properly if the sliders are not locked in place.
- Do not allow wire clippings, shavings, or other foreign material to enter any Unit. Otherwise, Unit burning, failure, or malfunction may occur. Cover the Units or take other suitable countermeasures, especially during wiring work.

Wiring

- Follow the instructions in this manual to correctly perform wiring.
- Double-check all wiring and switch settings before turning ON the power supply. Incorrect wiring may result in burning.
- Be sure that all terminal screws, and cable connector screws are tightened to the torque specified in the relevant manuals. Incorrect tightening torque may result in malfunction.
- Mount terminal blocks and connectors only after checking the mounting location carefully.
- Leave the label attached to the Unit when wiring. Removing the label may result in malfunction if foreign matter enters the Unit.
- Remove the label after the completion of wiring to ensure proper heat dissipation. Leaving the label attached may result in malfunction.
- Use crimp terminals for wiring. Do not connect bare stranded wires directly to terminals. Connection of bare stranded wires may result in burning.
- Do not apply voltages to the Input Units in excess of the rated input voltage. Excess voltages may result in burning.
- Always connect to a ground of 100 Ω or less when installing the Units. Not connecting to a ground of 100 Ω or less may result in electric shock.
  A ground of 100 Ω or less must be installed when shorting the GR and LG terminals on the Power Supply Unit.
- Do not apply voltages or connect loads to the Output Units in excess of the maximum switching capacity. Excess voltage or loads may result in burning.
- Do not pull on the cables or bend the cables beyond their natural limit. Doing either of these may break the cables.
- Do not place objects on top of the cables or other wiring lines. Doing so may break the cables.
- Do not use commercially available RS-232C personal computer cables. Always use the special cables listed in this manual or make cables according to manual specifications. Using commercially available cables may damage the external devices or CPU Unit.
- Never connect pin 6 (5-V power supply) on the RS-232C port on the CPU Unit to any device other than an NT-AL001 Link Adapter, CJ1W-CIF11 Converter, and Programmable Terminals (NV3W-M□20L). The external device or the CPU Unit may be damaged.

Handling

- The Power Supply Unit may possibly be damaged if the entire voltage for a dielectric strength test is applied or shut OFF suddenly using a switch. Use a variable resistor to gradually increase and decrease the voltage.
- Separate the line ground terminal (LG) from the functional ground terminal (GR) on the Power Supply Unit before performing withstand voltage tests or insulation resistance tests. Not doing so may result in burning.
- Make sure that the DIP switches and DM Area are set correctly before starting operation.

- After replacing the CPU Unit, a Special I/O Unit, or a CPU Bus Unit, make sure that the required data for the DM Area, Holding Area, and other memory areas has been transferred to the new Unit before restarting operation.
- Confirm that no adverse effect will occur in the system before attempting any of the following. Not doing so may result in an unexpected operation.
  - Changing the operating mode of the PLC (including the setting of the startup operating mode).
  - Force-setting/force-resetting any bit in memory.
  - Changing the present value of any word or any set value in memory.
  - When the settings (IP address or tag data link settings) of the EtherNet/IP Unit or built-in EtherNet/IP port are transferred from a Programming Device, all of the destination EtherNet/IP Units or built-in EtherNet/IP ports (nodes) will be reset in order to enable the transferred settings. Transfer settings to the EtherNet/IP Units or built-in EtherNet/IP ports only after verifying that restarting the Units will not cause any problems in the system.
- Do not attempt to disassemble, repair, or modify any Units. Any attempt to do so may result in malfunction, fire, or electric shock.
- Do not drop the PLC or subject abnormal vibration or shock to it.
- The life of the battery will be reduced if the PLC is left for a period of time without a battery installed and without power supply, and then a battery is installed without turning ON the power supply.
- Replace the battery as soon as a battery error occurs or as soon as the specified battery backup time expires. Be sure to install a replacement battery within two years of the production date shown on the battery's label.
- Before replacing the battery, turn ON power for at least 5 minutes before starting the replacement procedure and complete replacing the battery within 5 minutes of turning OFF the power supply. Not doing so may stop the clock.
- If the Battery Error Flag is used in programming the application, confirm system safety even if the system detects a battery error before you replace the battery while the power is ON.
- Do not short the battery terminals or charge, disassemble, heat, or incinerate the battery. Do not subject the battery to strong shocks. Doing any of these may result in leakage, rupture, heat generation, or ignition of the battery. Dispose of any battery that has been dropped on the floor or otherwise subjected to excessive shock. Batteries that have been subjected to shock may leak if they are used.
- UL standards require that only an experienced engineer can replace the battery. Make sure that an experienced engineer is in charge of battery replacement. Follow the procedure for battery replacement given in this manual.
- Dispose of the product and batteries according to local ordinances as they apply.

  廢電池請回收
- The following precaution must be displayed on all products containing lithium pri-mary batteries with a perchlorate content of 6 ppb or higher when exporting them to or shipping them through California, USA.
  Perchlorate Material–special handling may apply.
  See http://www.dtsc.ca.gov/hazardouswaste/perchlorate
- Battery (CJ1W-BAT01) contain a lithium primary battery with a perchlorate con-tent of 6 ppb or higher. When exporting a product containing the CJ3M-CPU□□ to or shipping such a product through California, USA, label all packing and ship-ping containers appropriately.
- If the I/O Hold Bit is turned ON, the outputs from the PLC will not be turned OFF and will maintain their previous status when the PLC is switched from RUN or MONITOR mode to PROGRAM mode. Make sure that the external loads will not produce dangerous conditions when this occurs. (When operation stops for a fatal error, including those produced with the FALS(007) instruction, all outputs from Output Unit will be turned OFF and only the internal output status will be maintained.)

- Unexpected operation may result if inappropriate data link tables or parameters are set. Even if appropriate data link tables and parameters have been set, confirm that the controlled system will not be adversely affected before starting or stopping data links.
- Write programs so that any data that is received for data link communications is used only if there are no errors in the CPU Units that are the sources of the data. Use the CPU Unit error information in the status flags to check for errors in the source CPU Units. If there are errors in source CPU Units, they may send incorrect data.
- All CPU Bus Units will be restarted when routing tables are transferred from a Programming Device to the CPU Unit. Restarting these Units is required to read and enable the new routing tables. Confirm that the system will not be adversely affected before transferring the routing tables.
- Tag data links will stop between related nodes while tag data link parameters are being transferred during PLC operation. Confirm that the system will not be adversely affected before transferring the tag data link parameters.
- If there is interference with network communications, output status will depend on the devices that are being used. When using devices with outputs, confirm the operation that will occur when there is interference with communications, and implement safety measures as required.
- When creating an AUTOEXEC.IOM file from a Programming Device (a Programming Console or the CX-Programmer) to automatically transfer data at startup, set the first write address to D20000 and be sure that the size of data written does not exceed the size of the DM Area. When the data file is read from the Memory Card at startup, data will be written in the CPU Unit starting at D20000 even if another address was set when the AUTOEXEC.IOM file was created. Also, if the DM Area is exceeded (which is possible when the CX-Programmer is used), the remaining data will be written to the EM Area.
- The user program and parameter area data in the CJ3 CPU Units are backed up in the built-in flash memory. The BKUP indicator will light on the front of the CPU Unit when the backup operation is in progress. Do not turn OFF the power supply to the CPU Unit when the BKUP indicator is lit. The data will not be backed up if power is turned OFF.
- Check the user program and Unit parameter settings for proper execution before actually running them on the Unit. Not checking the program and parameter settings may result in an unexpected operation.
- When setting a Special I/O Unit or CPU Bus Unit in the I/O tables, carefully check the safety of the devices at the connection target before restarting the Unit.
- Do not turn OFF the power supply to the PLC when reading or writing a Memory Card. Also, do not remove the Memory Card when the SD BUSY indicator is lit. Doing so may make the Memory Card unusable.
  To remove a Memory Card, first press the memory card power supply switch and then wait for the SD BUSY indicator to go out before removing the Memory Card.
- When restoring data, carefully check that the selected data is the correct data to be restored before executing the restore operation. Depending on the contents of the selected data, the control system may operate unexpectedly after the data is restored.
- Some Special I/O Units and CPU Bus Units operate with parameters stored in the CPU Unit (e.g., words allocated in DM Area, data link tables, or Ethernet settings). Information on restrictions will be displayed in the Information Area in the PLC Backup Tool if there are any restrictions for the selected CPU Bus Unit or Special I/O Unit. Check the restrictions, and then be sure to select both the CPU Unit and the CPU Bus Unit or Special I/O Unit when backing up or restoring data. The control system may operate unexpectedly if the equipment is started with the data backed up or restored without selecting both Units.
- Information on restrictions will be displayed in the Information Area in the PLC Backup Tool if the data to be stored includes a Unit that has restrictions on backup. Check the information on restrictions and take the required countermeasures. The control system may operate unexpectedly when the equipment is operated after the data is restored
- Before restoring data during PLC operation, be sure that there will be no problem if PLC operation stops. If the PLC stops at an unexpected time, the control system may operate unexpectedly.

- Be sure to turn the PLC power supply OFF and then back ON after restoring data. If the power is not reset, the system may not be updated with the restored data, and the control system may operate unexpectedly.
- Data on forced status can be backed up but it cannot be restored. Perform the procedure to force-set or force-reset bits from the CX-Programmer as required before starting operation after restoring data that includes forced status. Depending on the difference in the forced status, the control system may operate unexpectedly.
- If a symbol or memory address (only symbols are allowed for ST programming) is specified for the suffix of an array variable in ladder or ST programming, be sure that the specified element number does not exceed the maximum memory area range.
  Specifying an element number that exceeds the maximum range of the memory area specified for the symbol will result accessing data in a different memory area, and may result in unexpected operation.
- If a symbol or address is specified for an offset in a ladder diagram, program so that the memory area of the start address is not exceeded when the offset is specified indirectly using a word address or symbol.
  If an indirect specification causes the address to exceed the area of the start address, the system will access data in other area, and unexpected operation may occur.
- Do not connect any devices other than a personal computer to the USB port.
- If you use the clock data in the user program and turn OFF the power supply for a long time, use a Battery (CJ1W-BAT01) which is sold separately. The Battery is not mounted when the product is at factory setting. The clock data is retained by the built-in capacitor. The capacitor is charged while the power is supplied and discharged while the power is not supplied. If the power OFF time rate is high, the clock data is initialized and malfunctions may occur in the program for which the clock data is used.
- If you use the Battery, connect the CX-Programmer and set the Battery-related error detection to “Detect”. The Battery-related error detection is set to Do not use at the factory setting because the Battery is not built in. If the Battery-related er-ror detection is set to “Not Detect”, an error cannot be detected when the Battery is exhausted and malfunctions may occur in the program for which the clock data is used.
- When using the BIT COUNTER (BCNT), BLOCK SET (BSET), and BLOCK TRANSFER(XFER) in the ladder program, do not specify more than 99 words for each instruction. If more than 99 words must be used, use more than one in-struction. Pulse output is not possible during execution of these instructions. If more than 99 words are specified for one of them, pulse output will not be predi-cable and may stop momentarily.
- Before resetting the built-in EtherNet/IP, make sure that performing the reset will not cause any issues with the equipment.

● External Circuits

- Always turn ON power to the PLC before turning ON power to the control system. If the PLC power supply is turned ON after the control power supply, temporary errors may result in control system signals because the output terminals on DC Output Units and other Units will momentarily turn ON when power is turned ON to the PLC.
- Install external breakers and take other safety measures against short-circuiting in external wiring. Insufficient safety measures against short-circuiting may result in burning.

Operating Environment Precautions

- Follow the instructions in this manual to correctly perform installation.

- Do not operate the control system in the following locations:
  - Locations subject to direct sunlight.
  - Locations subject to temperatures or humidity outside the range specified in the specifications.
  - Locations subject to condensation as the result of severe changes in temperature.
  - Locations subject to corrosive or flammable gases.
  - Locations subject to dust (especially iron dust) or salts.
  - Locations subject to exposure to water, oil, or chemicals.
  - Locations subject to shock or vibration.

- Take appropriate and sufficient countermeasures when installing systems in the following locations:
  - Locations subject to strong, high-frequency noise.
  - Locations subject to static electricity or other forms of noise.
  - Locations subject to strong electromagnetic fields.
  - Locations subject to possible exposure to radioactivity.
  - Locations close to power supplies.

Regulations and Standards

Conformance to EMC and Electrical Safety Regulations

Concepts

OMRON products are industrial electrical devices that are incorporated into various types of machines and manufacturing equipment. The products conform to the relevant standards so that the machines and equipment incorporating the OMRON products can comply with EMC and Electrical Safety Regulations more easily.

Refer to the OMRON website (www.ia.omron.com) or ask your OMRON representative for the most recent standards to which our products conform.

● Conformance to EMC regulations

This product complies with EMC regulations when assembled in a PLC system or Machine Automation Controller.

To ensure that your machine or equipment complies with EMC regulations, please observe the following precautions.

- This product is defined as an in-panel device and must be installed within a control panel.
- This product complies with the emission standards. For the radiated emission requirements, in particular, please note that the actual emission varies depending on the configuration of the control panel to be used, the connected devices, and wiring methods. Therefore, customers themselves must confirm that the entire machine or equipment conforms to EMC regulations, even you are using a device that conforms to EMC regulations.
- You must use reinforced insulation or double insulation for the DC power supplies connected to DC Power Supply Units and I/O Units.
- The OMRON S8VK-S-series power supplies are recommended. Conformance to EMC standards has been confirmed for these recommended power supplies.

Caution:

This equipment is not intended for use in residential environments and may not provide adequate protection to radio reception in such environments.

● Conformance to Electrical Safety regulations

This product complies with Electrical Safety regulations required by specific laws and regulations such as the EU Directives and UKCA.

For precautions for each product, see the instruction manual included with the product.

Conformance to UL and CSA

The CJ Series includes models that conform to UL and CSA standards.

To apply these standards to your machines or equipment using models that conform to UL and CSA standards, refer to INSTRUCTION SHEET included with the product. INSTRUCTION SHEET explains the conditions of use for applying the standards.

Conformance to KC Standards

When you use this product in South Korea, observe the following precautions.

사 용 자 안 내 문
이 기기는 업무용 환경에서 사용할 목적으로 적합성평가를 받은 기기로서 가정용 환경에서 사용하는 경우 전파간섭의 우려가 있습니다.

This product meets the electromagnetic compatibility requirements for business use. There is a risk of radio interference when this product is used in home.

Software Licenses and Copyrights

This product incorporates certain third party software. The license and copyright information associated with this software is available at https://www.fa.omron.co.jp/product/tool/cj-info/index_en.html.

- OpenSSL
  This product includes software developed by the OpenSSL Project for use in the OpenSSL Toolkit (http://www.openssl.org/).
  Copyright (C) 1998-2019 The OpenSSL Project. All rights reserved.
  Copyright (C) 1995-1998 Eric Young (eay@cryptsoft.com) All rights reserved.
  This product includes cryptographic software written by Eric Young

Protective Countermeasures Against Security Threats

The customer must take the following measures to protect the CJ-series from threats during operation.

Restriction of Physical Access of Units

Install a physical system to prevent non-authorized persons without privileges from accessing the PLC system.

Specifically, restrict access to the relevant areas or provide physical access restraints for control systems and equipment by, for example, locking entrances and exits, and control panels.

Physical access to be restricted

- Accessing of serial port, USB port, and Ethernet port
- Accessing of DIP switches and rotary switches for setting on each Unit including the CPU Unit
- Accessing of memory card and memory card power OFF switch

Use of Security Functions

The CJ3 CPU Unit is equipped with functions intended to improve security. Use security functions to protect the PLC system from threats.

Examples of functions

- Operation Log Function
- CPU Unit Write Protection Function, Access Log Function
- File Encryption Function
- Ethernet Line User Authentication Function, Secure Communications Function
- Ethernet Port Close Function
- Ethernet Packet Filter Function

For details on CJ3 CPU Unit security functions, refer to the following.

- CJ-series CJ2/CJ3 CPU Unit Software User's Manual (W473) 10-6 Security Functions
- CS/CJ-series EtherNet/IP Units Operation Manual (W465) Section 13 Security Functions

Location of Communications Devices on a Reliable Network

When services other than secure communications are used on the EtherNet/IP port of CJ3M-CPU3□, locate communications devices including the EtherNet/IP Unit in a reliable network. When communicating via a non-reliable network, implement measures such as using a VPN.

Management of Access Restrictions and Configuration for Non-encrypted Files

Implement measures to ensure that individuals other than authorized personnel cannot access or tamper with the configuration files for Units other than the CPU Unit. For example, store files in restricted-access locations and perform configuration management.

Use of Unopened Individual Packaging Box

Use a CJ3 CPU Unit that still has the security tape intact on its individual packaging box at the time of purchase.

To prevent tampering with the product, the CJ3 CPU Unit's individual packaging box is sealed with tape so that the user can tell if the box has been opened.

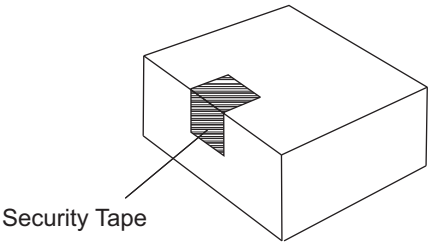

Safe Disposal of Equipment

If the product is disposed of or transferred to another party, there is a risk that information such as user data stored on the equipment may be leaked. Before disposing of or transferring the equipment, it is the user's responsibility to delete user data.

For details on how to delete Unit data, refer to *A-7 Deleting Data when Disposing of the Unit*.

Also, refer to the following manuals at the same time.

Manual Name	Manual Number	Usage
Security Guideline for Factory Automation System TECHNICAL GUIDE	P162	When you want to learn about the thinking behind security for FA systems in general.
Security Guideline for CS/CJ/CP-series CPU Unit	P176	Outlines the security measures that can be implemented using the CS/CJ/CP-series.
CJ3 Hardware User's Manual	W664 (This Manual)	When you want to know the names of the various parts of the CJ3 CPU Unit, details such as hardware settings, and how to use them.
CJ2/CJ3 Software User's Manual	W473	When you want to learn about the various functions of the CJ3 CPU Unit in detail including its security functions, and how to use them.
CS/CJ-series EtherNet/IP Units Operation Manual	W465	When you want to learn about the built-in Ethernet/IP functions of the CJ3M-CPU3□ and the security functions mounted on the CJ1W-EIP21S, and how to use them.

Unit Versions

Hardware revisions and unit versions are used to manage the hardware and software in CJ3 CPU Units.

The hardware revision or unit version is updated each time there is a change in hardware or software specifications. Therefore, even if Units have the same model number, they will have functional or performance differences if they have different hardware revisions or unit versions.

For the types of unit versions and the relationship between unit versions and Support Software, refer to *CJ-series CJ2/CJ3 CPU Unit Software User's Manual* (Cat. No. W473) Unit Versions of CJ2/CJ3 CPU Units.

The version at the time of shipment can be confirmed on the product nameplate or with Support Software.

Notation of Unit Versions on Products

The unit version, hardware revision, and lot number can be confirmed on the nameplate on the side of the product.

Example: For CJ3M-CPU35

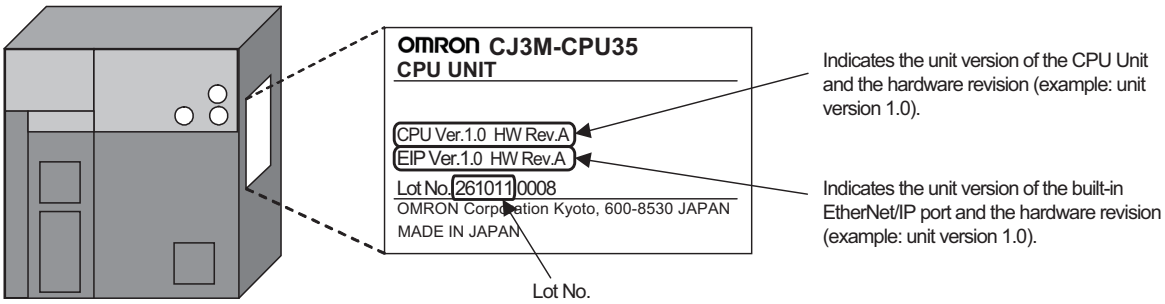

Confirming Unit Versions with Support Software

CX-Programmer can be used to confirm the unit version using one of the following two methods.

- Using the **PLC Information**
- Using the ***Unit Manufacturing Information*** (This method can be used for Special I/O Units and CPU Bus Units as well.)

● PLC Information

Only the unit version of the CPU Unit can be confirmed.

1 Use one of the following methods to display the PLC Information Dialog Box.

- If you know the device type and CPU type, select them in the *Change PLC* Dialog Box, go online, and select ***PLC - Edit - Information*** from the menus.
- If you don't know the device type and CPU type, but are connected directly to the CPU Unit on a serial line, select ***PLC - Auto Online*** to go online, and then select ***PLC - Edit - Information*** from the menus.

2 In either case, the following *PLC Information* Dialog Box will be displayed.

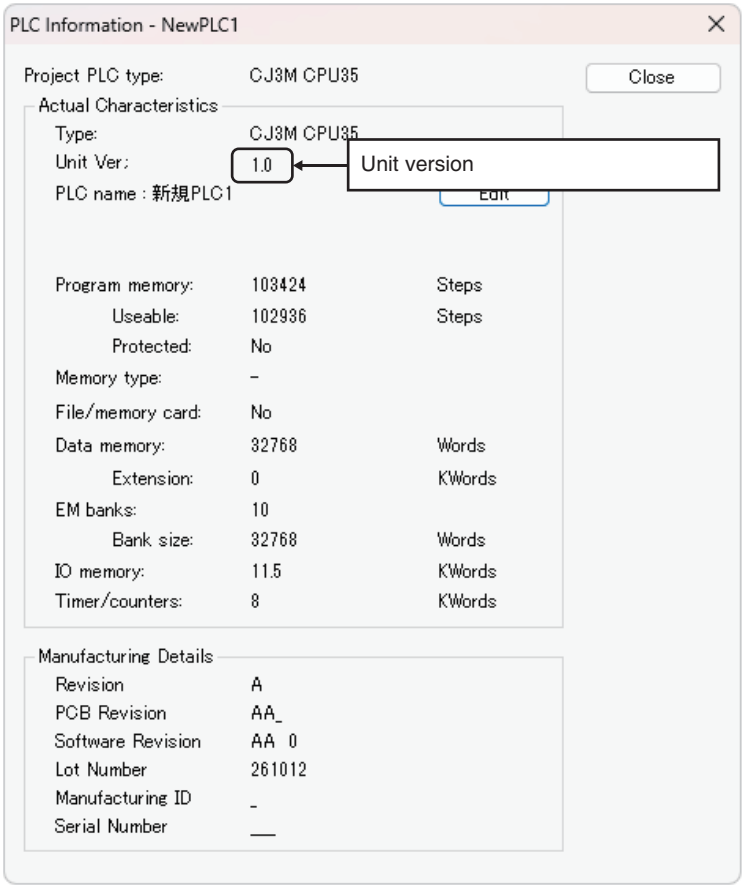

Use the above display to confirm the unit version of the CPU Unit.

● Unit Manufacturing Information

The unit version of a CPU Unit and built-in EtherNet/IP section, and the unit version of a Special I/O Unit and CPU Bus Unit can be confirmed.

1 In the I/O Table Window, right-click and select Unit Manufacturing information - CPU Unit.

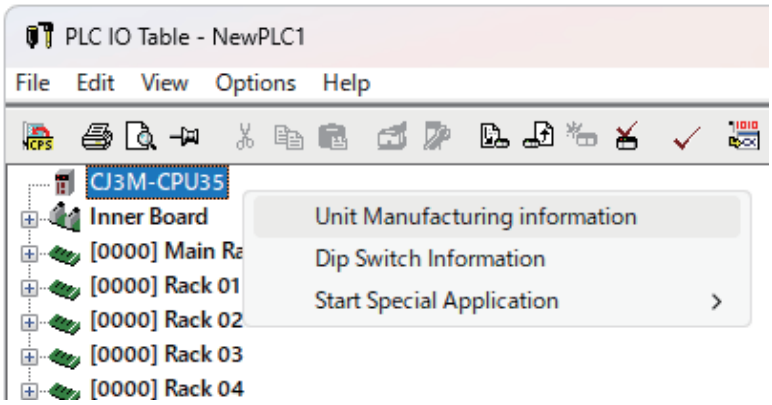

2 The following *Unit Manufacturing information* Dialog Box will be displayed.

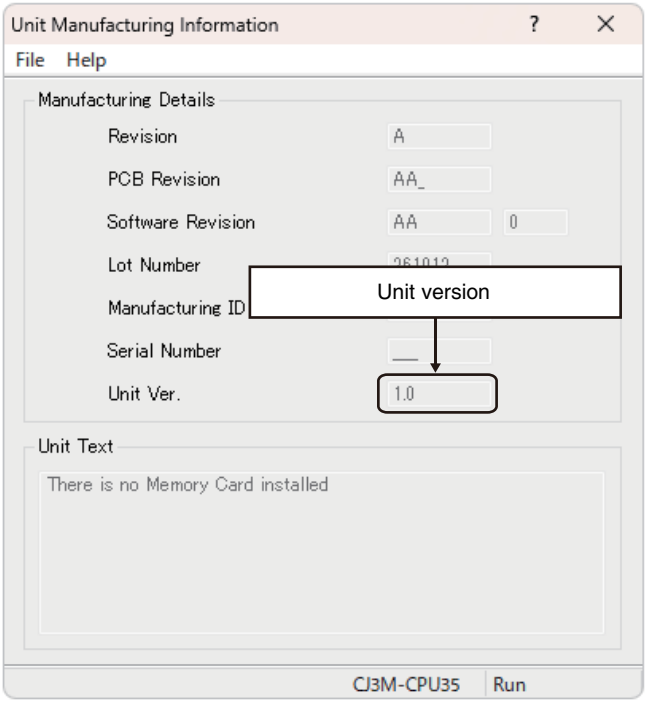

Use the above display to confirm the unit version of the CPU Unit connected online.

3 Using the Unit Version Labels

The following unit version labels are provided with the CPU Unit.

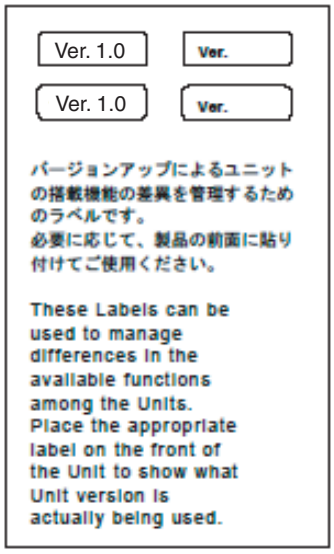

These labels can be attached to the front of previous CPU Units to differentiate between CPU Units of different unit versions.

Troubleshooting Problems with Unit Versions on the CX-Programmer

Problem	Cause	Solution
 After the above message is displayed, a compiling error will be displayed on the *Compile* Tab Page in the Output Window.	An attempt was made to download a program containing instructions supported only by later unit versions or a CPU Unit to a previous unit version.	Check the program or change to a CPU Unit with a later unit version.
	An attempt was to download a PLC Setup containing settings supported only by later unit versions or a CPU Unit to a previous unit version.	Check the settings in the PLC Setup or change to a CPU Unit with a later unit version.
"????" is displayed in a program transferred from the PLC to the CX-Programmer.	An attempt was made to upload a program containing instructions supported only by higher versions of CX-Programmer to a lower version.	New instructions cannot be uploaded to lower versions of CX-Programmer. Use a higher version of CX-Programmer.
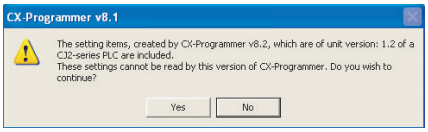 The above error is displayed when a project file is read.	An attempt was made to read a project file for an unsupported unit version.	Click the **Yes** Button to initialize unsupported settings and read the file. Click the **No** Button to cancel reading the project file.
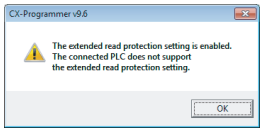 The above warning is displayed when going online.	An attempt was made to go online with an earlier version of a CPU Unit for a project file that contains an extended read protection setting that is supported only by a newer version of the CPU Unit.	Change the protection setting in the PLC Properties Dialog Box. Or, replace the CPU Unit with which you need to go online with a higher version of CPU Unit.

Related Manuals

Manuals related to a PLC built using a CJ-series CJ3 CPU Unit are listed in the following table. Use these manuals for reference.

Manual	Cat. No.	Model	Application	Description
CJ-series CJ3 CPU Unit Hardware User's Manual (this manual)	W664	CJ3M-CPU□□	Hardware specifications for CJ2 CPU Units	Describes the following for CJ3 CPU Units: • Overview and features • Basic system configuration • Part nomenclature and functions • Mounting and setting procedure • Remedies for errors • Also refer to the *Software User's Manual* (W473).
CJ-series CJ2/CJ3 CPU Unit Software User's Manual	W473	CJ3M-CPU□□ CJ2H-CPU6□-EIP CJ2H-CPU6□ CJ2M-CPU□□	Software specifications for CJ2/CJ3 CPU Units	Describes the following for CJ2/CJ3 CPU Units: • CPU Unit operation • Internal memory • Programming • Settings • Functions built into the CPU Unit Also refer to the *Hardware User's Manual* (W472)
CS/CJ-series EtherNet/IP™ Units Operation Manual	W465	CJ3M-CPU3□ CJ2H-CPU6□-EIP CJ2M-CPU3□/4□ CS1W-EIP21/EIP21S CJ1W-EIP21/EIP21S	Using the built-in EtherNet/IP port of the CJ2/CJ3 CPU Unit	Describes the built-in EtherNet/IP port and EtherNet/IP Units. Describes basic settings, tag data links, FINS communications, and other functions.
CJ-series CJ2M/CJ3M CPU Unit Pulse I/O Module User's Manual	W486	CJ3M-CPU□□ CJ2M-CPU□□ + CJ2M-MD21□	Information on using pulse I/O on CJ2M/CJ3M CPU Units	Provides the following information on the CJ2M/CJ3M CPU Units: • Specifications and wiring methods • I/O functions • Quick-response inputs • Interrupt functions • High-speed counters • Pulse outputs • PWM outputs When programming, use this manual together with the *Instructions Reference Manual* (Cat. No. W474).
CS/CJ/NSJ-series Instructions Reference Manual	W474	CJ3M-CPU□□ CJ2H-CPU6□-EIP CJ2H-CPU6□ CJ2M-CPU□□ CS1G/H-CPU□□H CS1G/H-CPU□□-V1 CS1D-CPU□□H CS1D-CPU□□S CJ1H-CPU□□H-R CJ1G/H-CPU□□H CJ1G-CPU□□P CJ1G-CPU□□ CJ1M-CPU□□ NSJ□-□□□□(B)-G5D NSJ□-□□□□(B)-M3D	Information on instructions	Describes each programming instruction in detail. Also refer to the *Software User's Manual* (W473) when you do programming.

Manual	Cat. No.	Model	Application	Description
CS/CJ/CP/NSJ-series Communications Command Reference Manual	W342	CJ3M-CPU3□ CJ2H-CPU6□-EIP CJ2H-CPU6□ CJ2M-CPU□□ CS1G/H-CPU□□H CS1G/H-CPU□□-V1 CS1D-CPU□□H CS1D-CPU□□S CS1W-SCU□□-V1 CS1W-SCB□□-V1 CJ1H-CPU□□H-R CJ1G/H-CPU□□H CJ1G-CPU□□P CJ1M-CPU□□ CJ1G-CPU□□ CJ1W-SCU□□-V1 CP1H-X□□□□-□ CP1H-XA□□□□-□ CP1H-Y□□□□-□ CP1L-M/L□□□-□□ CP1E-E/N□□D□-□	Information on communications for CS/CJ/CP-series CPU Units and NSJ-series Controllers	Describes C-mode commands and FINS commands Refer to this manual for a detailed description of commands for communications with the CPU Unit using C mode commands or FINS commands. **Note** This manual describes the communications commands that are addressed to CPU Units. The communications path that is used is not relevant and can include any of the following: serial ports on CPU Units, communications ports on Serial Communications Units/Boards, and Communications Units. For communications commands addressed to Special I/O Units or CPU Bus Units, refer to the operation manual for the related Unit.
CX-One Setup Manual	W463	CXONE-AL□□D-V4/ LT□□□-V4	Installing software from the CX-One	Provides an overview of the CX-One FA Integrated Tool Package and describes the installation procedure.
CX-Programmer Operation Manual	W446	CXONE-AL□□D-V4	Support Software for Windows computers CX-Programmer operating procedure	Describes operating procedures for the CX-Programmer. Also refer to the *Software User's Manual* (W473) and *CS/CJ/NSJ-series Instructions Reference Manual* (W474) when you do programming.
CX-Programmer Operation Manual Functions Blocks/Structured Text	W447			
CX-Programmer Operation Manual SFC Programming	W469			
CS/CJ/CP/NSJ-series CX-Simulator Operation Manual	W366		Operating procedures for CX-Simulator Simulation Support Software for Windows computers Using simulation in the CX-Programmer with CX-Programmer version 6.1 or higher	Describes the operating procedures for the CX-Simulator. When you do simulation, also refer to the *CX-Programmer Operation Manual* (W446), *Software User's Manual* (W473), and *CS/CJ/NSJ-series Instructions Reference Manual* (W474).
CS/CJ/CP/NSJ-series CX-Integrator Network Configuration Software Operation Manual	W464		Network setup and monitoring	Describes the operating procedures for the CX-Integrator.

1

Overview

This section provides an overview of the CJ3 CPU Units.

1-1 Overview of CJ3 CPU Units 1-2
1-1-1 CJ3 CPU Unit Features 1-2
1-1-2 Functions Enhanced on the CJ3M CPU Unit 1-8
1-2 Basic Operating Procedure 1-9
1-3 Specifications 1-10
1-3-1 General Specifications 1-10
1-3-2 Performance Specifications 1-11
1-3-3 Function Specifications 1-17

1-1 Overview of CJ3 CPU Units

1-1-1 CJ3 CPU Unit Features

Large Memory Capacity

● Large Program Capacity

The CJ3M CPU Units provide a large program capacity of up to 100 Ksteps.

● Special Function Block Definition Area

A special area called the FB Program Area is provided to store function block definitions. This allows you to use function blocks to make program components and structures from previous programs while reducing the usage of the User Program Area. And any function block definitions that would exceed the FB Program Area are stored in the User Program Area.

● Large Data Memory Capacity

The CJ3M CPU Units provide a large EM Area capacity of up to 320 Kwords (10 banks).

● Up to 128 Cyclic Tasks

The user program can be divided into up to 128 tasks. Using smaller task programs makes it easier to structure programs and contributes to shorter cycle times.

General-purpose Networks for Support Software Interface

● Built-in USB and EtherNet/IP Ports

A commercially available USB cable can be used to connect to the PLC directly from a USB port on a personal computer. In addition, with the CJ3M-CPU3□, a PLC on the EtherNet/IP network can be accessed via USB.

● Prevent Connecting to the Wrong PLC by Using PLC Names from Support Software

A user-set PLC name can be recorded. When using Support Software to connect online to a PLC, verification of the PLC name prevents incorrect connections from the Support Software.

Built-in EtherNet/IP Port

The CJ3M CPU Units provide as standard equipment a built-in EtherNet/IP port that supports the same FINS Ethernet functions as an Ethernet Unit (including features such as an FTP server, Modbus TCP/UDP and time coordination) as well as the EtherNet/IP open network.
(CJ3M-CPU3□ only)

● High-speed, High-capacity Data Links with User-set Refresh Cycles

The CJ3M CPU Units provide high-speed, high-capacity data links, and refresh cycles can be set individually for each data link area.

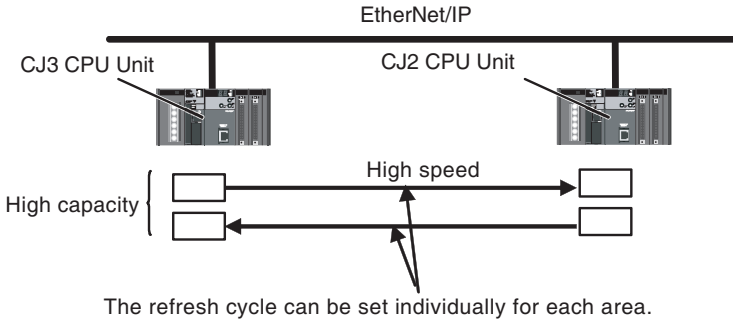

Network Symbols (Tags) for Flexible Support of Program Changes

The CPU Units support network symbols (tags). They have an internal tag name server that enables them to store tag names and addresses in advance in symbol tables in the CPU Units. Tags enable the following features.

Data links can be set using tags.

With data links on an EtherNet/IP network, send and receive areas can be specified using symbols rather than addresses. This enables flexible support for design changes made by simply changing the symbol tables that serve as correspondence tables without changing the data link areas set by tag names.

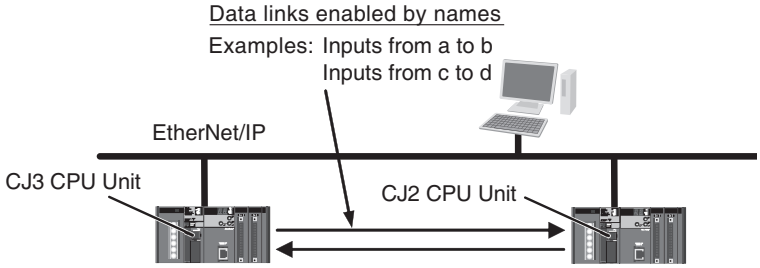

Access from host devices is enabled using tags.

Tags can be used for access from host devices, such as HMI or PC Programmable Terminals. This makes the creation of host screens and programs at devices such as PTs much more convenient.

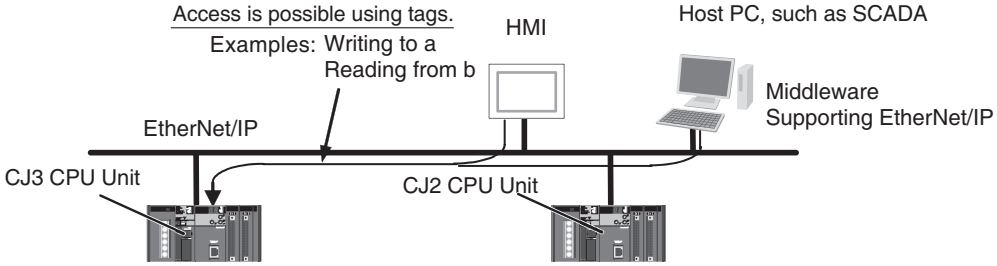

Automatic tag allocation makes it unnecessary to know the addresses.

Automatic allocation of tags in the high-capacity EM Area, using automatic address allocation in CX-Programmer symbol tables, enables data link design and access from host devices without having to pay attention to addresses.

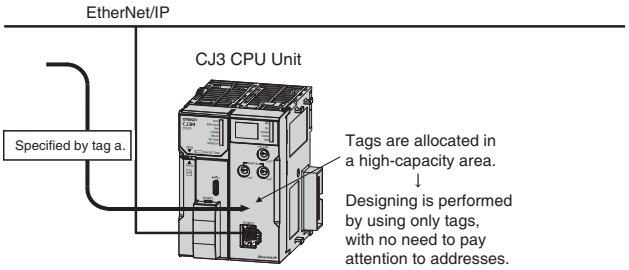

Easier Programming

● Address offsets can be specified.

When an address is specified for an instruction operand, an offset can be specified in brackets after the address to offset it. For example, by setting a word address in brackets to specify the offset, the address can be dynamically specified according to the contents of that word.

Example
W0.00[D0]: W0.00 is the starting address and the contents of D0 is the offset. If D0 is &3, then W0.03 is specified.

● Symbols can be specified for array variable subscripts.

By specifying symbols for array variable subscripts, elements can be dynamically specified according to the values of the symbols.

Example
a[b]: The value of symbol b specifies the element for array variable a[ ].

● Create and Use Data Structures

Data structures can be created and used. This enables easily using I/O memory in the CPU Unit as a database or for library data.

● Bit addresses can be used in the DM Area and EM Area.

Previously the DM Area and the EM Area could be addressed only by words, and bit addresses could not be specified. The work area for bits can now be expanded by enabling bit addresses in the DM and EM Areas.

For example, D10.00 specifies bit 00 of D10.

● The format for timer/counter PV refreshing can be selected individually for each instruction.

Either BCD or binary can be selected individually for each instruction as the format for timer/counter PV refreshing. For example, the TIM (BCD) and TIMX (binary) instructions can be used together.

- **The optimum languages can be combined for structured programming.**

Ladder diagrams, ST, and SFC languages can be freely combined in the user program. Being able to use the optimum languages for a particular process helps reduce the time involved in programming.

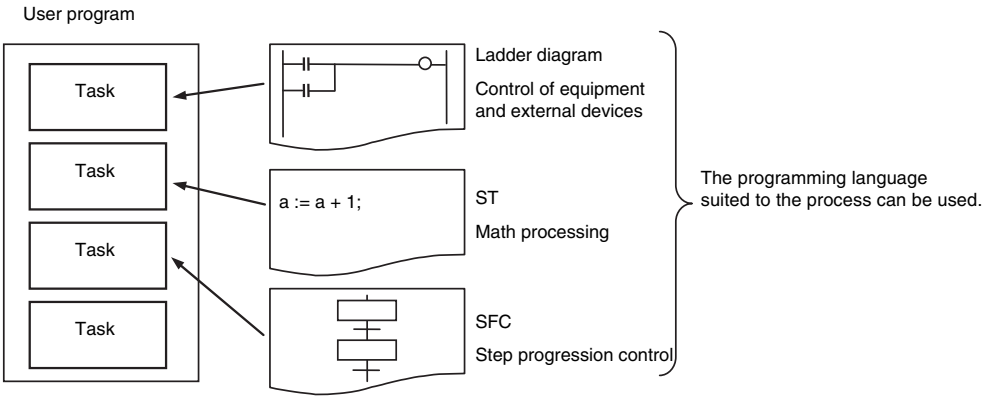

In addition, ladder diagrams and ST language can be freely used for function blocks (FBs) in ladder diagrams and ST programs, and for transition and action programs in SFC. This feature makes it possible to optimize structured programming.

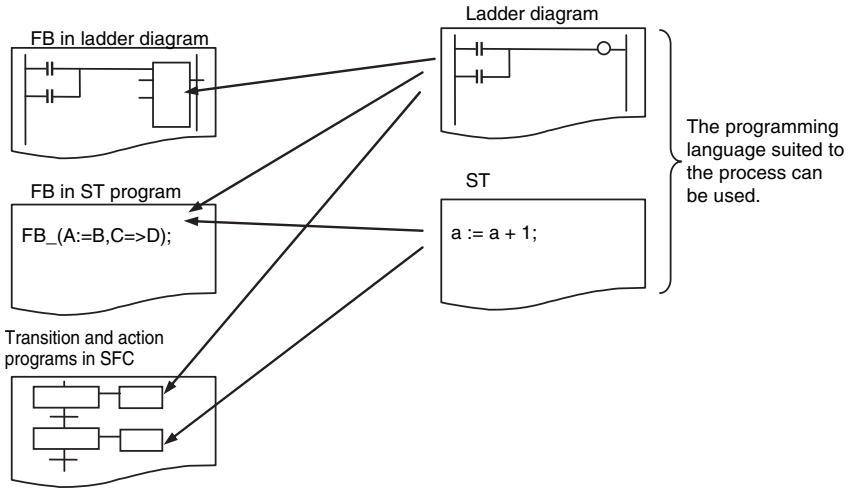

Debugging

- **Reduced Effect on Cycle Time from Online Editing**

The additional cycle time due to online editing has been reduced to approx. 1 ms, minimizing the effects on equipment operation during debugging.

- **Fast, High-capacity Data Tracing**

Up to 220 Kwords of data can be traced (6 times more than previously), with ample trigger conditions, and data can be traced continuously for long periods of time.

- **I/O Module Auxiliary Area Selection**

I/O module auxiliary data to be traced can be easily selected from lists.

- **Force-set/Reset Bits in Specified EM Area Banks**

A parameter can be set to enable force-setting/resetting bits in specified EM Area banks.

Battery-free I/O Memory Backup Function

This function holds DM Area (D), EM Area (E), Holding Area (H), Counter (C), and Auxiliary Area (A) data without the need for a battery when the power is interrupted. Battery maintenance is no longer required. To use the clock function, connect the optional battery.

SD Memory Card

The SD Memory Card installed in the CPU Unit can be accessed from the user program.

Enhanced Security Functions (CJ3M CPU Unit)

Various security functions enhance the security of network access as well as the programs and data stored in the devices, and reduces the risk of theft or tampering with customer assets. This enables you to improve the system's overall security performance. (CJ3M CPU Unit only)

● Secure Communications Function (Built-in CJ3M-CPU3□ EtherNet/IP Port)

This function ensures the confidentiality and integrity of the line used to access important data on the CPU Unit from CX-Programmer.

● User Authentication (Built-in CJ3M-CPU3□ EtherNet/IP Port)

This function allows only specified users to perform online operation from peripheral tools, and further restricts online operation based on privileges set for each user.

● Port Open/Close Function (Built-in CJ3M-CPU3□ EtherNet/IP Port)

This function allows you to block or allow communications to pass through the TCP/UDP ports allocated to individual communication functions according to the configured setting.

Setting unused communication functions to **Disabled** reduces the number of entry points that can be illegally accessed by external hackers.

● IP Packet Filter (Built-in CJ3M-CPU3□ EtherNet/IP Port)

This function selectively allows packets received by the EtherNet/IP port to pass through based on preset conditions.

● File Encryption Function

This function encrypts files handled by CX-Programmer, backup tools, SD Memory Cards, and file memory to prevent unauthorized access by third parties.

● Operation Log Function

- Operation Log Function of CPU Unit
  This function records important operations performed on a CPU Unit and the results of these operations.
- Operation Log Function of Built-in EtherNet/IP Port
  This function records important operations and the results of these operations performed by online users while they are online via SecureComm.

● Extended FINS Write Access Log

This function retains a log of requests to write to the CPU Unit from external sources when the source address is not the local node.

For information on the security functions of the built-in CJ3M-CPU3□ EtherNet/IP port, refer to Section *13 Security Functions* in the *CS/CJ-series EtherNet/ IP Units Operation Manual* (Cat. No. W465).

Use Pulse I/O and Interrupt Inputs

With the CJ3M CPU Units, up to two Pulse I/O Modules can be mounted.

This enables input functions, such as normal inputs, interrupt inputs, high-speed counter inputs, and quick-response inputs, and output functions, such as normal outputs, pulse outputs, and variable duty factor pulse outputs. This provides support for many different types of applications.

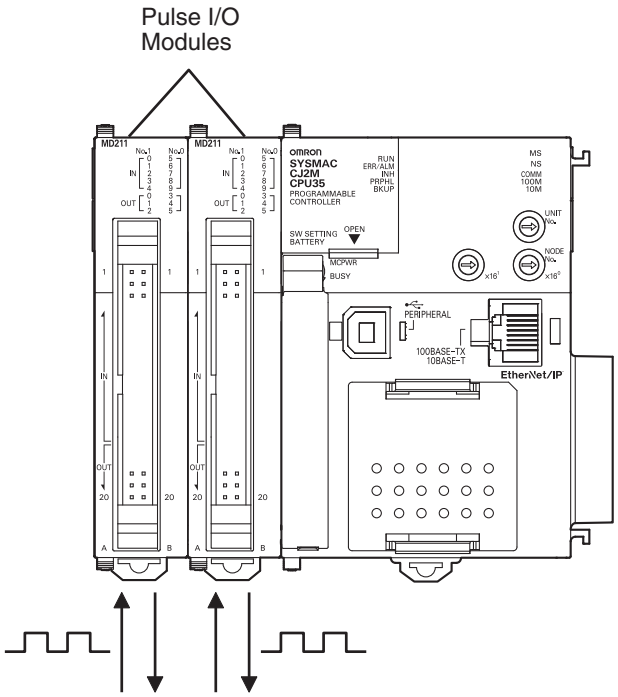

- Normal inputs: 20 (10 per Pulse I/O Module)
- Interrupt inputs: 8 (4 per Pulse I/O Module)
- High-speed counter inputs: 4 (2 per Pulse I/O Module)
- Quick-response inputs: 8 (4 per Pulse I/O Module)
- Normal outputs: 12 (6 per Pulse I/O Module)
- Pulse outputs: 4 (2 per Pulse I/O Module)
- Variable duty factor pulse outputs: 4 (2 per Pulse I/O Module)

1-1-2 Functions Enhanced on the CJ3M CPU Unit

Functions	Details of enhancement	CJ3M CPU unit	CJ2M CPU unit	CJ2H CPU unit
I/O capacity	Has been expanded up to a maximum of 5,120 points.	5,120 points max.	2,560 points max.	2,560 points max.
Maximum Number of Expansion Racks	Has been expanded up to a maximum of 7 racks and 80 units.	7 max. (80 Units)	3 max. (40 Units)	3 max. (40 Units)
Number of connected EtherNet/IP Units	The number of connected EtherNet/IP Units has been expanded to eight units.	8 Units max. 7 Units max. (CPU3□)	2 Units max.	8 Units max. 7 Units max. (CPU6□-EIP)
User Memory	Program capacity and FB program area have been expanded.	100K steps max. FB program area: 40K steps	60K steps max. FB program area: 20K steps	400K steps max.
EM Area	Extended data memory area (EM Area) has been expanded.	10 banks max.	4 banks max.	25 banks max.
Memory Card	SD Memory Cards are now supported.	SD Memory Cards HMC-SD□□□	Memory Card HMC-EF□□□	Memory Card HMC-EF□□□
Battery-free I/O memory backup	I/O memory is held without the need for a battery when the power is interrupted.	Supported	-	-
Data Tracing	• Trace memory has been expanded to allow data to be traced for long periods of time. • Trigger conditions comprising a combination of multiple bits and words can be set.	• Memory Capacity 220,000 words • Number of Samplings Bits = 31 max. Word data: 32 max. • Trigger Conditions Combination of 4 bits and 2 words	• Memory Capacity 8,000 words • Number of Samplings Bits = 31 max. Word data: 16 max. • Trigger Conditions 1 bit or 1 word	• Memory Capacity 32,000 words • Number of Samplings Bits = 31 max. Word data: 16 max. • Trigger Conditions 1 bit or 1 word
Security	Operation Log Function	Supported	-	-
	File Encryption Function	Supported	-	-
	Secure Communications Function	Supported *1	-	-
	User authentication	Supported *1	-	-
	Port Open/Close Function	Supported *1	-	-
	IP Packet Filter	Supported *1	-	-
Built-in EtherNet/IP *1	The EtherNet/IP function has been enhanced.	Equivalent to CJ1W-EIP21S	Exclusively for CJ2M	Equivalent to CJ1W-EIP21
	Number of Connections	256	32	256
	Permissible Communications Band	12,000 packets per second	3,000 packets per second	12,000 packets per second
	Number of Registrable Tags	256	32	256
	Maximum Link Data Size per Node	184,832 words	6,400 words	184,832 words
	Maximum Data Size per Connection	722 words	6,400 words	722 words
	Number of Registrable Tag Set	256	32	256
	Socket service	Supported (TCP/UDP)	-	-
	Modbus server	Supported (TCP/UDP)	-	-
	Modbus client	Supported (TCP/UDP)	-	-

*1 CJ3M-CPU3□ only.

1-2 Basic Operating Procedure

In general, use the following procedure.

1. Setting Devices and Hardware

Mount the Power Supply Unit, the CPU Unit, the other Units, and the End Covers. Set the DIP switch and rotary switches as required.

Refer to *Section 3 Nomenclature and Functions* and *Section 5 Installation* in the *CJ3 CPU Unit Hardware User's Manual* (W664).

2. Wiring

Wire the power supply, I/O, and communications. Refer to the following manuals.

Refer to *Section 5 Installation* in the *CJ3 CPU Unit Hardware User's Manual* (W664).
Refer to *Section 11 Programming Devices and Communications* in the *CJ2/CJ3 CPU Unit Software User's Manual* (W473).
Refer to *Section 3 I/O Specifications and Wiring for Pulse I/O Module* in the *CJ2M/CJ3M CPU Unit Pulse I/O Module User's Manual* (W486).

3. Connecting Online to the PLC

Connect the personal computer online to the PLC.

Refer to *Section 4 Support Software* in the *CJ3 CPU Unit Hardware User's Manual* (W664)

Set the internal clock before you use the CPU Unit for the first time.

Refer to *PART 2: CX-Server PLC Tools CHAPTER 9 - PLC Clock Tool in The CX-Programmer Operation Manual* (W446)

4. I/O Allocations

Using the CX-Programmer, allocate I/O memory in the CPU Unit to the mounted Units.

Refer to *Section 8 I/O Allocations and Unit Settings* in the *CJ2/CJ3 CPU Unit Software User's Manual* (W473)
Refer to *Section 2 I/O Application Procedures and Function Allocations* in the *CJ2M/CJ3M CPU Unit Pulse I/O Module User's Manual* (W486).

5. Software Setup

Make the PLC software settings.

- CPU Unit initialization: Refer to *Section 4 CPU Unit Initialization* in the *CJ2/CJ3 CPU Unit Software User's Manual* (W473).
- DM Area Settings for Special I/O Units and CPU Bus Units: Refer to *Section 8 I/O Allocations and Unit Settings* in the *CJ2/CJ3 CPU Unit Software User's Manual* (W473).
- PLC Setup: Refer to *Section 9 PLC Setup* in the *CJ2/CJ3 CPU Unit Software User's Manual* (W473).

6. Creating the Program

Create the program using the CX-Programmer.

Refer to *Section 5 Understanding Programming* in the *CJ2/CJ3 CPU Unit Software User's Manual* (W473).

7. Checking Operation

Check the I/O wiring and the AR Area settings, and perform trial operation. The CX-Programmer can be used for monitoring and debugging.

Refer to *10-7 Debugging* in the *CJ2/CJ3 CPU Unit Software User's Manual* (W473).

8. Basic Program Operation

Set the operating mode to RUN mode to start operation.

1-3 Specifications

1-3-1 General Specifications

Item		CJ3M-CPU1□/3□
Enclosure		Mounted in a panel
Grounding		Less than 100 Ω
CPU Unit Dimensions		CJ3M-CPU1□ 90 mm × 75 mm × 31 mm (H × D × W) CJ3M-CPU3□ 90 mm × 75 mm × 62 mm (H × D × W)
Weight*1		CJ3M-CPU1□: 140 g or less CJ3M-CPU3□: 240 g or less
Current Consumption		CJ3M-CPU1□: 5 VDC 0.26 A, 24 VDC 0.003 A CJ3M-CPU3□: 5 VDC 0.91 A, 24 VDC 0.003 A
Use Environment	Ambient Operating Temperature	0 to 55°C
	Ambient Operating Humidity	10% to 90% (with no condensation)
	Atmosphere	Must be free from corrosive gases.
	Ambient Storage Temperature	–20 to 70°C
	Altitude	2,000 m or less
	Pollution Degree	2 or less: Conforms to IEC 61010-2-201.
	Noise Immunity	2 kV on power supply line (Conforms to IEC 61000-4-4.)
	Overvoltage Category	Category II: Conforms to IEC 61010-2-201.
	EMC Immunity Level	Zone B
	Vibration Resistance	Conforms to IEC60068-2-6. 5 to 8.4 Hz with 3.5-mm amplitude, 8.4 to 150 Hz Acceleration of 10 m/s^2 for 100 min in X, Y, and Z directions (10 sweeps of 10 min each = 100 min total)
	Shock Resistance	Conforms to IEC60068-2-27. 150 m/s^2, 3 times in X, Y, and Z directions (100 m/s^2 for Relay Output Units)
Battery	Life	5 years at 25°C
	Weight	Approx. 10 g
	Model	CJ1W-BAT01 (Sold separately)
Applicable Standards		*2

*1 Includes the weights of the End Cover.

*2 Refer to the OMRON website (http://www.ia.omron.com/) or consult your OMRON representative for the most recent applicable standards for each model.

1-3-2 Performance Specifications

Items			CJ3M-CPU□□
User Memory			CPU11/31: 5K steps CPU12/32: 10K steps CPU13/33: 20K steps CPU14/34: 50K steps CPU15/35: 100K steps
I/O Bits			5,120 bits
Processing Speed	Overhead Processing Time*1		Normal Mode: CPU3□: 260 µs CPU1□: 160 µs
	Execution Time		Basic Instructions: 0.04 µs min.; Special Instructions: 0.06 µs min.
	Interrupts	I/O Interrupts and External Interrupts	Interrupt task startup time: 31 µs Return times to cyclic tasks: 10 µs
		Scheduled Interrupts	Minimum time interval: 0.4 ms (set in 0.1 ms increments)
			Interrupt task startup time: 30 µs Return time to cyclic task: 11 µs
Maximum Number of Connectable Units			Total per CPU Rack or Expansion Rack: 10 Units max.; Total per PLC: 80 Units max.
	Basic I/O Units		80 Units max. However, a maximum of two CJ1W-INT01 Interrupt Input Units can be mounted.
	Special I/O Units		Units for up to 96 unit numbers can be mounted. (Unit numbers run from 0 to 95. Units are allocated between 1 and 8 unit numbers.)
	CPU Bus Units		CPU1□: 16 Units max. CPU3□: 15 Units max.
	Pulse I/O Modules		2 max.*3
	Slots for which interrupts can be used		Slots 0 to 4 on CPU Rack
Maximum Number of Expansion Racks			7 max.
CIO Area	I/O Area		5,120 bits (320 words): Words CIO 0000 to CIO 0319
	Link Area		3,200 bits (200 words): Words CIO 1000 to CIO 1199
	CPU Bus Unit Area		6,400 bits (400 words): Words CIO 1500 to CIO 1899
	Special I/O Unit Area		15,360 bits (960 words): Words CIO 2000 to CIO 2959
	Pulse I/O Area		20 inputs, 12 outputs (CIO 2960 to CIO 2963)
	Serial PLC Link Area		1,440 bits (90 words): Words CIO 3100 to CIO 3189
	EtherCAT Remote Area		2,368 bits (148 words), 3,800 to 3863 words, 3,900 to 3,963 words, 3,980 to 3,999 words
	DeviceNet Area		9,600 bits (600 words): Words CIO 3200 to CIO 3799
Work Area	Internal I/O Area		3,200 bits (200 words): Words CIO 1300 to CIO 1499 (Cannot be used for external I/O.) 37,504 bits (2,344 words): Words CIO 4000 to CIO 6143 (Cannot be used for external I/O.)
	Work Area		8,192 bits (512 words): Words W000 to W511 (Cannot be used for external I/O.)
Holding Area			8,192 bits (512 words): Words H000 to H511 Bits in this area maintain their ON/OFF status when PLC is turned OFF or operating mode is changed. Words H512 to H1535: These words can be used only for function blocks. They can be used only for function block instances (i.e., they are allocated only for internal variables in function blocks).

*1 The following times are added if EtherNet/IP data tag links are used.
CJ3M-CPU3□: 100 µs + Number of transfer words x 0.78 µs
When the Pulse I/O Module is mounted, 10 µs × number of mounted units is added.

Items		CJ3M-CPU□□
Auxiliary Area		Read-only: 31,744 bits (1,984 words) • 7,168 bits (448 words): Words A0 to A447 • 24,576 bits (1,536 words): Words A10000 to A11535*2 Read/write: 16,384 bits (1,024 words) in words A448 to A1471*2
Temporary Area		16 bits: TR0 to TR15
Timer Area		4,096 timer numbers (T0000 to T4095)
Counter Area		4,096 counter numbers (C0000 to C4095)
DM Area		32k words*3 • DM Area words for Special I/O Units: D20000 to D29599 (100 words × 96 Units) • DM Area words for CPU Bus Units: D30000 to D31599 (100 words × 16 Units)
EM Area		32k words/bank × 1 to 10 banks max.: E00_00000 to E09_32767 max.*4
		CPU□1/□2/□3: 1 bank CPU□4/□5: 10 banks
Index Registers		IR0 to IR15 These are special registers for storing PLC memory addresses for indirect addressing. (Index Registers can be set so that they are unique in each task or so that they are shared by all tasks.)
Cyclic Task Flag Area		128 flags
Memory Card		HMC-SD29□: 2 GB HMC-SD49□: 4 GB HMC-SD1A□: 16 GB
Operating Modes		PROGRAM Mode: Programs are not executed. Preparations can be executed prior to program execution in this mode. MONITOR Mode: Programs are executed, and some operations, such as online editing, and changes to present values in I/O memory, are enabled in this mode. RUN Mode: Programs are executed. This is the normal operating mode.
Execution Mode		Normal Mode
Programming Languages		Ladder Logic (LD) Sequential Function Charts (SFC) Structured Text (ST) Instruction Lists (IL)
Function Blocks	Maximum number of definitions	2,048
	Maximum number of instances	2,048
FB Program Area		40K steps

*2 A960 to A1471 and A10000 to A11535 cannot be accessed by CPU Bus Units, Special I/O Units, PTs, and Support Software that do not specifically support the CJ2/CJ3 CPU Units.

*3 Bits in the EM Area can be addressed either by bit or by word. These bits cannot be addressed by CPU Bus Units, Special I/O Units, PTs, and Support Software that do not specifically support the CJ3 CPU Units.

*4 Force-setting/resetting bits in the EM Area is possible either for banks that have been specified for automatic address allocation or for banks specified for the EM Area force-set/reset function.

Items		CJ3M-CPU□□
Tasks	Type of Tasks	Cyclic tasks Interrupt tasks (Power OFF interrupt tasks, scheduled interrupt tasks, I/O interrupt tasks, external interrupt tasks, and input interrupt tasks(Pulse I/O Module)*3)
	Number of Tasks	Cyclic tasks: 128 Interrupt tasks: 256 (Interrupt tasks can be defined as cyclic tasks to create extra cyclic tasks. Therefore, the total number of cyclic tasks is actually 384 max.)
Symbols (Variables)	Type of Symbols	Local symbols: Can be used only within a single task in the PLC. Global symbols: Can be used in all tasks in the PLC. Network symbols (tags)*8: I/O memory in the CPU Unit can be externally accessed using symbols, depending on parameter settings.
	Data Type of Symbols	BOOL (bit) UINT (one-word unsigned binary) UDINT (two-word unsigned binary) ULINT (four-word unsigned binary) INT (one-word signed binary) DINT (two-word signed binary) LINT (four-word signed binary) UINT BCD (one-word unsigned BCD)*5 UDINT BCD (two-word unsigned BCD)*5 ULINT BCD (four-word unsigned BCD)*5 REAL (two-word floating-point) LREAL (four-word floating-point) CHANNEL (word) NUMBER (constant or number) WORD (one-word hexadecimal) DWORD (two-word hexadecimal) LWORD (four-word hexadecimal) STRING (1 to 255 ASCII characters) TIMER (timer)*6 COUNTER (counter)*6 User-defined data types (data structures)
	Maximum Size of Symbol	32k words
	Array Symbols (Array Variables)	One-dimensional arrays
	Number of Array Elements	32,000 elements max.
	Number of Registrable Network Symbols (Tags)*8	10,000 max.
	Length of Network Symbol (Tag) Name	255 bytes max.
	Encoding of Network Symbols (Tags)	UTF-8
Data Tracing	Memory Capacity	220,000 words (Up to 32k words x the maximum bank number for the CPU Unit when EM is specified in CX-Programmer)
	Number of Samplings	Bits = 31, one-word data =32, two-word data = 16, four-word data = 8
	Sampling Cycle	1 to 2,550 ms (Unit: 1 ms)
	Trigger Conditions	• Bit Upward/downward differentiation, ON, OFF AND/OD condition combinations for a maximum of 4 bits • Word =, >, ≥, <, ≤, ≠ AND/OR condition combinations for a maximum of 2 words • AND/OR condition combinations for bit conditions and word conditions
File Memory		Memory Card HMC-SD□□□ is used EM file memory (Part of the EM Area can be converted for use as file memory.)
Source/Comment Memory	Program source, comments, program index, and symbol table	Capacity: 2 Mbytes

*5 This data type cannot be used in Function blocks.

*6 This data type can be used only in Function blocks.

Item					CJ3M-CPU□□
Commu-nications	Logical Ports for Communications		Logical Ports		8 ports (Used for SEND, RECV, CMND, PMCR, TXDU, and RXDU instructions.)
			Extended Logical Ports		64 ports (Used for SEND2, RECV2, CMND2, and PMCR2 instructions.)
	CIP Communica-tions Specification		Class 3 (Number of Connections)		Number of connections: 128
			UCMM (Non-connec-tion Type)		Maximum number of clients that can communicate at the same time: 32 Maximum number of servers that can communicate at the same time: 32
	Peripheral (USB) Port				USB 2.0-compliant Type-C connector
		Baud Rate			12 Mbps max.
	Serial Port				Interface: Conforms to EIA RS-232C.
		Communications Method			Half-duplex
		Synchronization Method			Start-stop
		Baud Rate			0.3, 0.6, 1.2, 2.4, 4.8, 9.6, 19.2, 38.4, 57.6, or 115.2 (kbps)
		Transmission Distance			15 m max.
	EtherNet/IP Port*7				---
		Transmission Specifications	Media Access Method		CSMA/CD
			Modulation		Baseband
			Transmission Paths		Star
			Baud Rate		100 Mbps (100Base-TX)
			Transmission Media		Shielded twisted-pair (STP) cable; Categories: 5, 5e
			Transmission Distance		100 m (between Ethernet switch and node)
			Number of Cascade Connections		No restrictions if Ethernet switch is used.
		Communications Specifications	CIP Communications: Tag Data Links		---
				Number of Connections	256
				Packet Interval (Refresh period)	0.5 to 10,000 ms (Unit: 0.5 ms) Can be set for each connection. (Data will be refreshed at the set interval, regardless of the number of nodes.)
				Permissible Communications Band*8	12,000 packets per second
				Number of Registrable Tags	256
				Type of Tags	CIO, DM, EM, HR, WR, and network symbols
				Number of Tags per Connection	8 (Seven tags if PLC status is included in the segment.)
				Maximum Link Data Size per Node	184,832 words
				Maximum Data Size per Connection	252 or 722 words*9 (Data is synchronized within each connection.)
				Number of Registrable Tag Set	256 (1 connection = 1 segment)
				Maximum Tag Set Size	722 words (One word is used when PLC status is included in the segment.)
				Maximum Number of Tags Refresh-able in a Single Cycle of CPU Unit*16	Output/send (CPU Unit to EtherNet/IP): 256 Input/receive (EtherNet/IP to CPU Unit): 256
				Data Size Refreshable in a Single Cycle of CPU Unit*16	Output/send (CPU to EtherNet/IP): 6,432 words Input/receive (EtherNet/IP to CPU): 6,432 words
				Change of Tag Data Link Parameter Settings during Operation	Supported*11
				Multi-cast Packet Filter*12	Supported
				Quick Connect	Originator only is supported

*7 The EtherNet/IP port is built into the CJ3M-CPU3□ only.

*8 “Packets per second” is the number of communications packets that can be processed per second.

Item					CJ3M-CPU□□
Commu-nications		Communications Specifications	CIP Communications: Explicit Messages		---
				Class 3 (Number of Connections)	Number of connections: 128
				UCMM (Non-connection Type)	Maximum number of clients that can communicate at the same time: 32 Maximum number of servers that can communicate at the same time: 32
				CIP Routing	Supported (CIP routing is enabled for the following remote Units: CJ1W-EIP21/EIP21S, CJ3M-CPU3□, CJ2H-CPU6□-EIP, CJ2M-CPU3□, and CS1W-EIP21/EIP21S.)
			FINS Communications		---
				FINS/UDP	Supported
				FINS/TCP	16 connections max.
			Socket Service (TCP)		8 sockets max.
			Socket Service (UDP)		8 sockets max.
			Modbus TCP Server		8 connections max.
			Modbus UDP Server		Supported
			Modbus TCP Client		Possible by function block using Socket Service 8 connections max.
			Modbus UDP Client		Possible by function block using Socket Service 8 connections max.
			EtherNet/IP Conformance Test		Conforms to CT21.
			EtherNet/IP Interface		10Base-T/100Base-TX Auto Negotiation/Fixed Setting

*9 Large Forward Open (CIP optional specification) must be supported in order for 505 to 1,444 bytes to be used as the data size. Application is supported between CS/CJ-series PLCs. When connecting to devices from other manufacturers, make sure that the devices support the Large Forward Open specification.

*10 If the maximum number is exceeded, refreshing will require more than one CPU Unit cycle.

*11 When changing parameters, however, the EtherNet/IP port where the change is made will be restarted. In addition, a timeout will temporarily occur at the other node that was communicating with that port, and it will then recover automatically.

*12 The EtherNet/IP port supports an IGMP client, so unnecessary multicast packets are filtered by using an Ethernet switch that supports IGMP snooping.

Item			CJ3M-CPU□□
Pulse I/O (When using Pulse I/O Module)	External interface		CJ2M-MD211 or CJ2M-MD212 Pulse I/O Module with 40-pin MIL connector
	Pulse Inputs		Can be used as normal inputs, interrupt inputs, quick-response inputs, or high-speed counter inputs. (Functions of each input must be selected in the PLC Setup.) Input method: Line-driver input or 24-VDC input (selected by wiring)
		Normal inputs	20 max. (10 per Pulse I/O Module) Input constants: Set in the PLC Setup (0, 0.5, 1, 2, 4, 8, 16, or 32 ms). Default: 8 ms
		Interrupt inputs and quick-response inputs	8 max. (4 per Pulse I/O Module) Input signal minimum ON pulse width: 30 μs
		High-speed counter inputs	4 max. (2 per Pulse I/O Module) Input method: Differential-phase (×4) pulses, pulse + direction, up/down pulses, or increment pulse Maximum response frequency: 50 kHz for differential phases or 100 kHz for single phase Counting mode: Linear mode or circular (ring) mode Count value: 32 bits Counter reset: Phase Z + software reset or software reset Control method: Target-value comparison or range comparison Gate function: Supported
	Pulse Outputs		Can be used as normal outputs, pulse outputs, or PWM outputs. (Functions of each output must be selected in the PLC Setup.) Output method: Sinking or sourcing transistor outputs (The method is determined by Pulse I/O Module model.)
		Normal outputs	12 max. (6 per Pulse I/O Module)
		Pulse outputs	4 max. (2 per Pulse I/O Module) Output method: CW/CCW or pulse + direction (The method is determined by the I/O wiring and the instructions used in the ladder program.) Output frequency: 1 pps to 100 kpps (in increments of 1 pps) Output Mode: Continuous mode (for speed control) or independent mode (for position control) Output pulses: Relative coordinates: 0000 0000 to 7FFF FFFF hex (0 to 2,147,483,647 pulses) Absolute coordinates: 8000 0000 to 7FFF FFFF hex (−2,147,483,648 to 2,147,483,647) Acceleration/deceleration curves: Linear or S-curve Origin search function: Supported
		PWM outputs	4 max. (2 per Pulse I/O Module) Output frequency: 0.1 to 6,553.5 Hz (in 0.1-Hz increments) or 1 to 32,800 Hz (in 1-Hz increments) Duty ratio: 0.0% to 100.0% (in 0.1% increments)

1-3-3 Function Specifications

Functions				Description
Cycle Time Management	Minimum Cycle Time			A minimum cycle time can be set. (0.2 to 32,000 ms; Unit: 0.1 ms) The minimum cycle time setting can be changed in MONITOR mode
	Cycle Time Monitoring			The cycle time is monitored. (0.01 to 40,000 ms; Unit: 10 ms)
	Background Processing			Instructions with long execution times can be executed over multiple cycles to prevent fluctuations in the cycle time.
Unit (I/O) Management	Basic I/O Units, Special I/O Units, and CPU Bus Units	I/O Refreshing	Cyclic Refreshing	Cyclic refreshing of Basic I/O Units, Special I/O Units, and CPU Bus Units
			Immediate Refreshing	I/O refreshing by immediate refreshing instructions
			Refreshing by IORF	I/O refreshing by IORF instruction
		Unit Recognition at Startup		The number of units recognized when the power is turned ON is displayed.
	Basic I/O Units	Input Response Time Setting		The input response times can be set for Basic I/O Units. The response time can be increased to reduce the effects of chattering and noise at input contacts. The response time can be decreased to enable detecting shorter input pulses.
		Load OFF Function		All of the outputs on Basic I/O Units can be turned OFF when an error occurs in RUN or MONITOR mode.
		Basic I/O Unit Status Monitoring		Alarm information can be read from Basic I/O Units and the number of Units recognized can be read.
	Special I/O Units and CPU Bus Units	Reading/writing data using instructions for specific Units		Special instructions can be used to read/write required data for specific Units at high speed.
		Unit Restart Bits to Restart Units		A Special I/O Unit or CPU Bus Unit can be restarted.
	Configuration Management	Automatic I/O Allocation at Startup		I/O words can be automatically allocated to the Basic I/O Units that are connected in the PLC to start operation automatically without registering Units into I/O tables.
		I/O Table Creation		The current unit configuration can be registered in I/O tables to prevent it from being changed, to reserve words, and to set words.
		Rack/Slot First Word Settings		The first words allocated to a Units on the Racks can be set.

Functions			Description
Pulse I/O Functions (When using Pulse I/O Module)	Pulse Input Functions	Normal Inputs	Input signals are read during I/O refreshing and stored in I/O memory.
		Interrupt Inputs	An interrupt task can be started when an input signal turns ON or turns OFF.
		Quick-response Inputs	Input signals that are shorter than the cycle time are read and stored in I/O memory.
		High-speed Counter Inputs	High-speed pulse signals are counted. Interrupt tasks can also be started.
	Pulse Output Functions	Normal Outputs	The status of I/O memory is output during I/O refreshing.
		Pulse Outputs	A pulse signal is output with the specified frequency and number of pulses at a fixed duty ratio (50%).
		PWM Outputs	A pulse signal is output at the specified duty ratio.
	Origin Searches		The origin point of the machine is determined according to the specified origin search parameters while actually outputting pulses and using the origin and origin proximity input signals as conditions. (Pulse inputs and outputs are also used for this function.)
Memory Management	Holding I/O Memory when Changing Operating Modes		The status of I/O memory can be held when the operating mode is changed or power is turned ON. The forced-set/reset status can be held when the operating mode is changed or power is turned ON.
	File Memory		Files (such as program files, data files, and symbol table files) can be stored in Memory Card, EM File Memory, or Comment Memory.
	Built-in Flash Memory		The user program and Parameter Area can be backed up to an internal flash memory when they are transferred to the CPU Unit.
	EM File Function		Parts of the EM Area can be treated as file memory.
	Storing Comments		I/O comments can be stored as symbol table files in a Memory Card, EM file memory, or comment memory.
	EM Configuration		EM Area can be set as trace memory or EM file memory.
	Battery-free I/O Memory Backup Function		This function holds DM Area (D), EM Area (E), Holding Area (H), Counter (C), and Auxiliary Area (A) data without the need for a battery when the power is interrupted.
Memory Cards	Automatic File Transfer at Startup		A program file and parameter files can be read from a Memory Card when the power is turned ON.
	Program Replacement during PLC Operation		User programs can be transferred from a Memory Card to CPU Unit during operation.
	Function for Reading and Writing Data from a Memory Card		Data in I/O memory in the CPU Unit can be written to a Memory Card in CSV/TXT format. Data in CSV/TXT format in the Memory Card can be read to I/O memory in the CPU Unit.

Function			Description
Communications			---
	Peripheral (USB) Port		Bus for communications with various kinds of Support Software running on a personal computer.
	Serial Port		---
		Host Link (SYSWAY) Communications	Host Link commands or FINS commands placed between Host Link headers and terminators can be sent from a host computer or PT to read/write I/O memory, read/control the operating mode, and perform other operations for PLC.
		No-protocol Communications	I/O instructions for communications ports (such as TXD/RXD instructions) can be used for data transfer with peripheral devices such as bar code readers and printers.
		NT Link Communications	I/O memory in the PLC can be allocated and directly linked to various PT functions, including status control areas, status notification areas, touch switches, lamps, memory tables, and other objects.
		Peripheral Bus	Bus for communications with various kinds of Support Software running on a personal computer.
		Serial Gateway	This gateway enables receiving and automatically converting FINS to the CompoWay/F.
		Serial PLC Links	Data is exchanged between CPU Units using serial ports without communications programming. PTs set to the 1:N NT Link protocol can be included in the network.
	EtherNet/IP Port*1		100Base-TX/10Base-T Protocols: TCP/IP, UDP, ARP, ICMP (ping only), BOOTP, LLDP Applications: FINS, CIP, SNTP, DNS (Client), FTP (Server), Modbus (Server)
		CIP Communications Service: Tag Data Links	Programless cyclic data exchanges with the devices on the EtherNet/IP network.
		CIP Communications Service: Message Communications	Any CIP commands can be received from the devices on the EtherNet/IP network.
		FINS Communications Service: Message Communications	Any FINS commands can be transferred with the devices on the EtherNet/IP network.
		Socket service: Message Communications	Any data can be sent and received to and from general-purpose devices over Ethernet.
		Modbus Communications Service: Message Communications	Modbus commands can be sent and received to and from Modbus clients and Modbus servers on an EtherNet/IP network.

*1 Supported only by CJ3M-CPU□.

Function			Description
Interrupt	Scheduled Interrupts		A task is executed at a specified interval.
		Resetting and restarting with MSKS(690)	When MSKS(690) is executed, the internal timer is restarted and the time to first interrupt is set to a fixed value.
		Reading present value of internal timer with MSKS(690)	MSKS(690) can be used to read the time that has elapsed until the scheduled interrupt is started or since the previous scheduled interrupt.
	Power OFF Interrupts		A task can be executed when CPU Unit's power turns OFF.
	I/O Interrupts		A task can be executed when an input signal is input to an Interrupt Input Unit.
	External Interrupts		A task can be executed when interrupts are requested from a Special I/O Unit or a CPU Bus Unit.
	Input Interrupt Function of Pulse I/O Module		A task is started for an interrupt input from a Pulse I/O Module or for a high-speed counter input.
		Input Interrupts	Interrupt tasks are executed when the interrupt input turns ON or turns OFF. Direct Mode: An interrupt task is executed each time an input signal changes. Counter Mode: Changes in the input signal are counted up or down and the interrupt task is executed when the counter counts out. (The maximum response frequency is 3 kHz.)
		High-speed Counter Interrupts	An interrupt task is executed when preset comparison conditions for a high-speed counter are met. Target-value comparison: The interrupt task is executed when the count matches a specified value. Range comparison: The interrupt task is executed when the count enters or leaves a specified range of values.
Clock	Clock Function		Clock data is stored in memory. Accuracy (Accuracy depends on the temperature.) Ambient temperature of 55°C: –3.5 to +0.5 min error per month Ambient temperature of 25°C: –1.5 to +1.5 min error per month Ambient temperature of 0°C: –3 to +1 min error per month
	Built-in Capacitor Backup Time		At ambient temperature of 40°C: 10 days
	Operation Start Time Storage		The time when operating mode was last changed to RUN mode or MONITOR mode is stored.
	Operation Stop Time Storage		The last time a fatal error occurred or the last time the operating mode was changed to PROGRAM mode is stored.
	Startup Time Storage		The time when the power was turned ON is stored.
	Power Interruption Time Storage		The time when the power is turned OFF is stored.
	Total Power ON Time Calculation		The total time that the PLC has been ON is stored in increments of 10 hours.
	Power ON Clock Data Storage		A history of the times when the power was turned ON is stored.
	User Program Overwritten Time Storage		The time that the user program was last overwritten is stored.
	Parameter Date Storage		The time when the Parameter Area was overwritten is stored.

Function		Description
Power Supply Management	Memory Protection	Holding Area data, DM Area data, EM Area data, Counter Completion Flags, and counter present values are held even when power is turned OFF. CIO Area, Work Area, some Auxiliary Area data, and Timer Completion Flags, timer present values, index registers, and data registers can be protected by turning ON the IOM Hold Bit in the Auxiliary Area, and by also setting the IOM Hold Bit to “Hold” in the PLC Setup.
	Power OFF Detection Time Setting	The detection time for power interruptions can be set. AC power supply: 10 to 25 ms (variable) DC power supply: 2 to 5 ms (CJ1W-PD022) or 2 to 20 ms (CJ1W-PD025)
	Power OFF Detection Delay Time	The detection of power interruptions can be delayed: 0 to 10 ms (Not supported by the CJ1W-PD022.)
	Number of Power Interruptions Counter	The number of times power has been interrupted is counted.
Function Blocks		Standard programming can be encapsulated as function blocks.
	Languages in Function Block Definitions	Ladder programming or structured text
Debugging	Online Editing	The program can be changed during operation (in MONITOR or PROGRAM mode), except for block programming areas.
	Force-Set/Reset	Specified bits can be set or reset. A parameter can be set to enable force-setting/resetting bits in EM Area banks. Force-setting/resetting is enabled for the specified bank and all the banks after it.
	Differentiate Monitoring	ON/OFF changes in specified bits can be monitored.
	Data Tracing	The specified I/O memory data can be stored in the trace memory in the CPU Unit. The triggers can be set.
	Continuous Tracing	The trace data can be uploaded during data tracing using the CX-Programmer. This enables continuously logging the data by constantly uploading the trace data.
	Automatically starting tracing when operation starts	Data tracing can be automatically started when operation is started (i.e., when the operating mode is changed from PROGRAM mode to MONITOR or RUN mode).
	Storing Location of Error when an Error Occurs	The location and task number where execution stopped for a program error is recorded.
	Program Check	The programs can be checked for items such as no END instruction and FALS/FAL errors at startup.
Self-diagnosis and Restoration	Error Log	A function is provided to store predefined error codes in CPU Unit, error information, and time at which the error occurred.
	CPU Error Detection	CPU Unit WDT errors are detected.
	User-defined Failure Diagnosis	Errors can be generated for user-specified conditions: Non-fatal errors (FAL) and fatal errors (FALS). Program section time diagnosis and program section logic diagnosis are supported (FPD instruction).
	Load OFF Function	This function turns OFF all outputs from Output Units when an error occurs.
	RUN Output	The RUN output from the CJ1W-PA205R turns ON while CPU Unit is in RUN mode or MONITOR mode.
	Basic I/O Load Short-circuit Detection	This function provides alarm information from Basic I/O Units that have load short-circuit protection.
	Failure Point Detection	The time and logic of an instruction block can be analyzes using the FPD instruction.
	CPU Standby Detection	This function indicates when the CPU Unit is on standby because all Special I/O Units and CPU Bus Units have not been recognized at the startup in RUN or MONITOR mode.

Function				Description
Self-diagnosis and Restoration (Continued from previous page)	Non-fatal Error Detection	System FAL Error Detection (User-defined non-fatal error)		This function generates a non-fatal (FAL) error when the user-defined conditions are met in program.
		Duplicated Refreshing Error Detection		This function detects an error when an immediate refreshing Instruction in an interrupt task is competing with I/O refreshing of a cyclic task.
		Basic I/O Unit Error Detection		This function detects the errors in Basic I/O Units.
		Backup Memory Error Detection		This function detects errors in the memory backup of the user programs and parameter area (backup memory).
		PLC Setup Error Detection		This function detects setting errors in the PLC Setup.
		CPU Bus Unit Error Detection		This function detects an error when there is an error in data exchange between the CPU Unit and a CPU Bus Unit.
		Special I/O Unit Error Detection		This function detects an error when there is an error in data exchange between the CPU Unit and a Special I/O Unit.
		Tag Memory Error Detection		This function detects errors in tag memory.
		Battery Error Detection		This function detects an error when a battery is not connected to the CPU Unit or when the battery voltage drops.
		CPU Bus Unit Setting Error Detection		This function detects an error when the model of a CPU Bus Unit in the registered I/O tables does not agree with the model that is actually mounted in the PLC.
		Special I/O Unit Setting Error Detection		This function detects an error when the model of a Special I/O Unit in the registered I/O tables does not agree with the model of Unit that is actually mounted.
	Fatal Error Detection	Memory Error Detection		This function detects errors that occur in memory of the CPU Unit.
		I/O Bus Error Detection		This function detects when an error occurs in data transfers between the Units mounted in Rack slots and the CPU Unit and detects when the End Cover is not connected to the CPU Rack or an Expansion Rack.
		Unit/Rack Number Duplication Error		This function detects an error when the same unit number is set for two or more Units, the same word is allocated to two or more Basic I/O Units, or the same rack number is set for two or more Racks.
		Too Many I/O Points Error Detection		This function detects an error when the total number of I/O points set in the I/O tables or the number of Units per Rack exceeds the specified range.
		I/O Setting Error Detection		The registered I/O tables are used to detect errors if the number of Units in the registered I/O tables does not agree with the actual number of Units that are connected or an Interrupt Unit has been connected in the wrong position.
		Program Error Detection		This function detects errors in programs.
			Instruction Processing Error Detection	This function detects an error when the given data value is invalid when executing an instruction, or execution of instruction between tasks was attempted.
			Indirect DM/EM BCD Error Detection	This function detects an error when an indirect DM/EM address in BCD mode is not BCD.
			Illegal Area Access Error Detection	This function detects an error when an attempt is made to access an illegal area with an instruction operand.
			No END Error Detection	This function detects an error when there is no END instruction at the end of the program.
			Task Error Detection	This function detects an error when there are no tasks that can be executed in a cycle, there is no program for a task, or the execution condition for an interrupt task was met but there is no interrupt task with the specified number.
			Differentiation Overflow Error Detection	This function detects an error when too many differentiated instructions are entered or deleted during online editing (131,072 times or more).
			Invalid Instruction Error Detection	This function detects an error when an attempt is made to execute an instruction that is not defined in the system.
			User Program Area Overflow Error Detection	This function detects an error when instruction data is stored after the last address in user program area.

Function			Description
Self-diagnosis and Restoration (Continued from previous page)	Fatal Error Detection	Cycle Time Exceeded Error Detection	This function monitors the cycle time (10 to 40,000 ms) and stops the operation when the set value is exceeded.
		System FALS Error Detection (User-defined Fatal Error)	This function generates a fatal (FALS) error when the user-defined conditions are met in program.
		Version Error Detection	This function detects an error when a user program includes a function that is not supported by the current unit version.
		Memory Card Transfer Error Detection	This function detects an error when the automatic file transfer from Memory Card fails at startup.
Maintenance	Simple Backup Function		This function collectively backs up the data in CPU Unit (user programs, parameters, and I/O memory) and internal backup data in the I/O Units.
	Unsolicited Communications		A function that allows the PLC to use Network Communications Instruction to send required FINS commands to a computer connected via a Host Link
	Remote Programming and Monitoring		Host Link communications can be used for remote programming and remote monitoring through a Controller Link, Ethernet, DeviceNet, or SYSMAC LINK Network. Communications across network layers can be performed. Controller Link or Ethernet: 8 layers DeviceNet or SYSMAC LINK: 3 layers
	Automatic Online Connection via Network	Direct Connection	This function enables automatically connecting to the PLC online when the CX-Programmer is directly connected by a serial connection (peripheral (USB) port or serial port).
		Via Networks	This function enables connecting the CX-Programmer online to a PLC that is connected via an EtherNet/IP network.
Security	Read Protection using Password		This function protects reading and displaying programs and tasks using passwords. Write protection: Set using the DIP switch. Read protection: Set a password using the CX-Programmer.
	FINS Write Protection		This function prohibits writing by using FINS commands sent over the network.
	Unit Name Function		This function allows the users to give any names to the Units. Names are verified at online connection to prevent wrong connection
	Hardware ID Using Lot Numbers		This function sets operation protection by identifying hardware using the user programs according to lot numbers stored in the Auxiliary Area.
	Operation Log Function		Function for recording important operations and the results of operations performed by online users while they are online together with the date, IP address of PC, and user name.
	Extended FINS Write Access Log		Function for retaining a log of requests to write to the CPU Unit from external sources when the source address is not the local node.
	File Encryption Function		Function for encrypting files handled by CX-Programmer, backup tools, and file memory to prevent unauthorized access by third parties.
	Secure Communications Function *2		Function for ensuring the confidentiality and integrity of the line used to access important data on the CPU Unit from peripheral tools.
	User authentication *2		Function for allowing only specified users to perform online operation from peripheral tools to further restrict online operation based on privileges set for each user.
	Port Open/Close Function *2		Function for allowing you to block or allow communications to pass through the TCP/UDP ports allocated to individual communication functions according to the configured setting.
	IP Packet Filter *2		Function for selectively allowing packets received by the EtherNet/IP port to pass through based on preset conditions.

*2 This function can be used only with CJ3M-CPU3□.

2

Basic System Configuration and Devices

This section describes the basic system configuration and devices used in a CJ3 PLC.

The CJ Series supports the following two types of system configuration.

- Basic System Configuration:
  System consisting of CPU Rack and Expansion Racks.
- Expanded System Configuration:
  System connected via CPU Unit built-in serial port and PLC Units, such as Communications Units.

2-1 Basic System Configuration 2-2

2-1-1 Basic System Configuration 2-2

2-1-2 CPU Rack 2-3

2-1-3 Expansion Racks 2-8

2-1-4 Configuration Units 2-11

2-1-5 Calculating Unit Current Consumption 2-20

2-1-6 Calculating Power Consumption 2-22

2-2 Expanded System Configuration 2-24

2-2-1 Serial Communications 2-24

2-2-2 Communications Networks 2-26

2-1 Basic System Configuration

2-1-1 Basic System Configuration

● CPU Rack

A CPU Rack can consist of a CJ3 CPU Unit, a CJ-series Power Supply Unit, CJ-series Configuration Units (Basic I/O Units, Special I/O Units, CPU Bus Units), and a CJ-series End Cover. The same CJ-series Power Supply Units and CJ-series Configuration Units that are used with CJ1/CJ2 CPU Units.* An I/O Control Unit is required to connect a CJ-series Expansion Rack. A Memory Card is optional.

* All CJ-series Units can be used as Configuration Units, but only Units that specifically support the CJ2/CJ3 CPU Unit can access the expanded portions of the I/O memory areas of the CJ2/CJ3 CPU Units (i.e., A960 to A1471, A10000 to A11535). Only the following CJ1 Units specifically support the CJ2/CJ3 CPU Units.

- EtherNet/IP Unit: CJ1W-EIP21/EIP21S
- Position Control Units: CJ1W-NC□□4, CJ1W-NC□81, and CJ1W-NC□82
- Analog Input Unit: CJ1W-AD042
- Analog Output Unit: CJ1W-DA042V
- Serial Communications Units: CJ1W-SCU22, CJ1W-SCU32, and CJ1W-SCU42

● Expansion Racks

A CJ-series Expansion Rack can be connected to the CPU Rack or another CJ-series Expansion Rack. An Expansion Rack can consist of an I/O Interface Unit, a Power Supply Unit, Basic I/O Units, Special I/O Units, CPU Bus Units, and an End Cover.

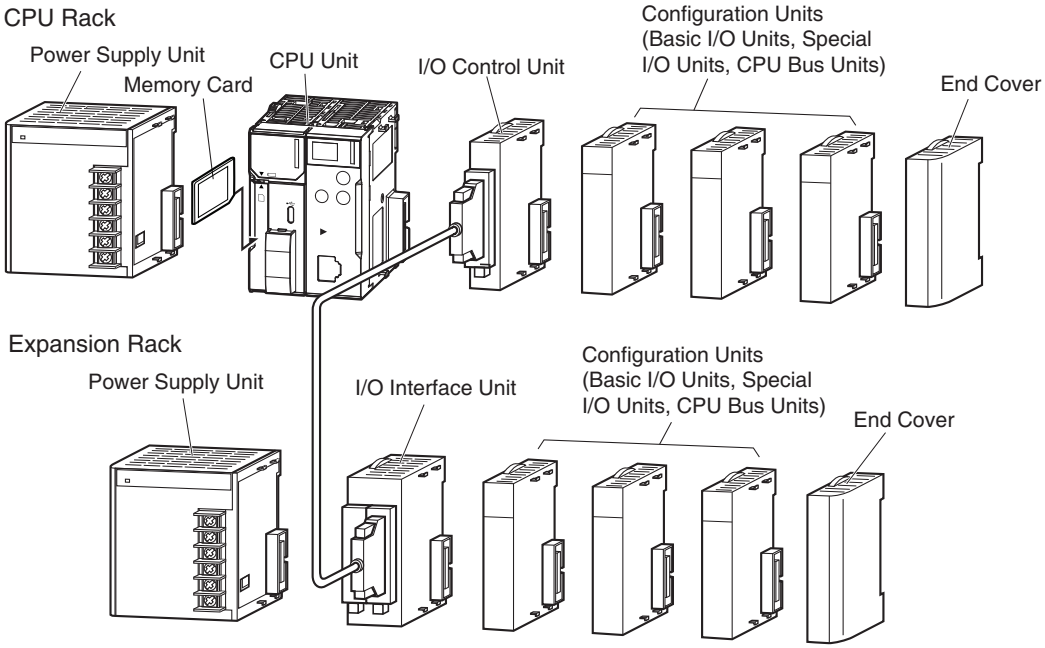

2-1-2 CPU Rack

The CPU Rack consists of a CJ3 CPU Unit, a CJ-series Power Supply Unit, CJ-series Configuration Units, and a CJ-series End Cover. Up to 10 Configuration Units can be connected.

● CJ3M CPU Units

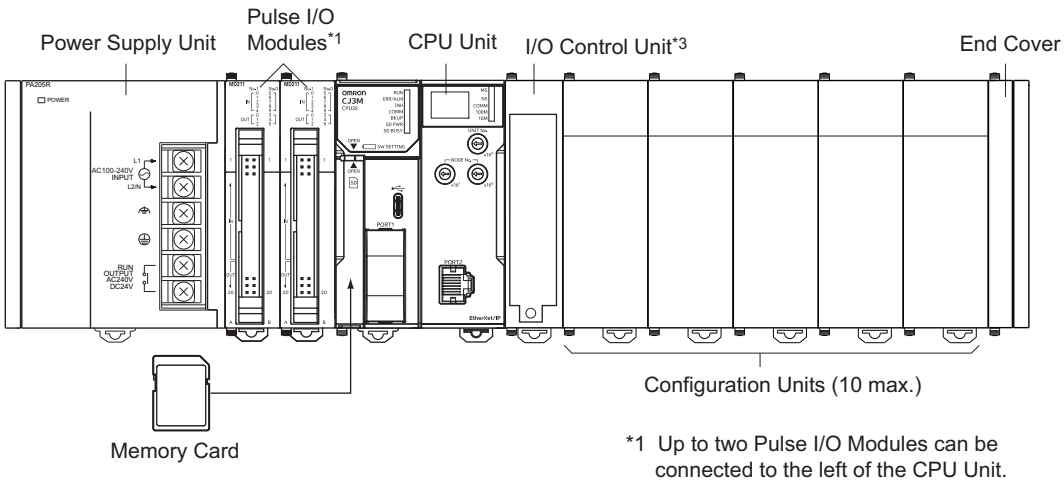

*1 Up to two Pulse I/O Modules can be connected to the left of the CPU Unit.
*2 The I/O Control Unit is required only to connect an Expansion Rack. It must be connected immediately to the right of the CPU Unit.

Even though the CJ-series PLCs do not have Backplanes, the term “slot” is still used to refer to the location of Units. Slot numbers are assigned in order to Units from left to right on the CPU Rack (slot 0, slot 1, slot 2, etc.).

Name	Configuration			Remarks
CJ-series CPU Rack	CPU Unit	CJ3M CPU Units		One required for every CPU Rack.
			Pulse I/O Module	Connected to use pulse I/O. Up to two Pulse I/O Modules can be connected. They must be connected to the immediate left of the CPU Unit. The Pulse I/O Module closest to the CPU Unit is Pulse I/O Module 0 and the other one is Pulse I/O Module 1.
		Memory Card		Install as required.
	CJ-series Power Supply Unit			One required for every CPU Rack.
	I/O Control Unit			Required to connect an Expansion Rack. Must be connected immediately to the right of the CPU Unit.
	Configuration Units	CJ-series Basic I/O Units		A total of up to 10 Units can be connected to the CPU Rack and to each of the Expansion Racks. (An error will occur if 11 or more Units are connected.)
		CJ-series Special I/O Units		
		CJ-series CPU Bus Units		
	End Cover			Must be connected to the right end of the CPU Rack. One End Cover is provided with the CPU Unit. A fatal error will occur if the End Cover is not connected.

Units

● CJ3M CPU Units

Model	I/O capacity	Program capacity	DM Area capacity	Current consumption (A)		Weight
				5 VDC	24 VDC	
CJ3M-CPU35	5,120 points	100 Ksteps	352 Kwords (DM: 32 Kwords, EM: 32 Kwords × 10 banks)	0.91	0.003	240 g
CJ3M-CPU34	5,120 points	50 Ksteps	352 Kwords (DM: 32 Kwords, EM: 32 Kwords × 10 banks)			
CJ3M-CPU33	5,120 points	20 Ksteps	64 Kwords (DM: 32 Kwords, EM: 32 Kwords × 1 bank)			
CJ3M-CPU32	5,120 points	10 Ksteps	64 Kwords (DM: 32 Kwords, EM: 32 Kwords × 1 bank)			
CJ3M-CPU31	5,120 points	5 Ksteps	64 Kwords (DM: 32 Kwords, EM: 32 Kwords × 1 bank)			
CJ3M-CPU15	5,120 points	100 Ksteps	352 Kwords (DM: 32 Kwords, EM: 32 Kwords × 10 banks)	0.26	0.003	140 g
CJ3M-CPU14	5,120 points	50 Ksteps	352 Kwords (DM: 32 Kwords, EM: 32 Kwords × 10 banks)			
CJ3M-CPU13	5,120 points	20 Ksteps	64 Kwords (DM: 32 Kwords, EM: 32 Kwords × 1 bank)			
CJ3M-CPU12	5,120 points	10 Ksteps	64 Kwords (DM: 32 Kwords, EM: 32 Kwords × 1 bank)			
CJ3M-CPU11	5,120 points	5 Ksteps	64 Kwords (DM: 32 Kwords, EM: 32 Kwords × 1 bank)			

*1 Increases by 0.15 A/Unit when an NT-AL001 Link Adapter is used.
Increases by 0.04 A/Unit when a CJ1W-CIF11 RS-422A Converter is used.

*2 Includes the weights of the End Cover.

Pulse I/O Modules

Model	Specifications	Current consumption (A)		Weight
		5 VDC	24 VDC	
CJ2M-MD211	Sinking outputs, MIL connector 10 inputs (including four interrupt/quick-response inputs and two high-speed counter inputs) 6 outputs (including two pulse outputs and two PWM outputs)	0.08	---	70 g
CJ2M-MD212	Sourcing outputs, MIL connector 10 inputs (including four interrupt/quick-response inputs and two high-speed counter inputs) 6 outputs (including two pulse outputs and two PWM outputs)	0.08	---	70 g

● CJ-series Power Supply Units

Model	Power supply voltage	Output capacity		Additional functions	Weight
		5 VDC	24 VDC		
CJ1W-PA205R	100 to 240 VAC	5.0 A	0.8 A	RUN output	350 g max.
CJ1W-PA205C	100 to 240 VAC	4.6 A	0.8 A	Replacement notification	400 g max.
CJ1W-PA202	100 to 240 VAC	2.8 A	0.4 A	---	200 g max.
CJ1W-PD025	24 VDC	5.0 A	0.8 A	---	335 g max.
CJ1W-PD022	24 VDC (non-insulated type)	2.0 A	0.4 A	---	130 g max.

● Memory Cards

Model	Specifications
HMC-SD29□	SD card, 2 GB
HMC-SD49□	SDHC card, 4 GB
HMC-SD1A□	SDHC card, 16 GB

● I/O Control Unit

Model	Specifications	Current consumption (A)		Weight
		5 VDC	24 VDC	
CJ1W-IC101	Required to connect a CJ-series Expansion Rack to a CJ-series CPU Rack. Must be connected immediately to the right of the CPU Unit. Connect to the I/O Interface Unit (CJ1W-II101) on the first Expansion Rack with a CS/CJ-series I/O Connecting Cable.	0.020	---	70 g max.

● End Cover

Model	Specifications	Current consumption (A)	Weight
CJ1W-TER01	Must be connected to the right end of the CPU Rack. (A fatal error will occur if the End Cover is not connected to the right end of the Rack.)	Included with CPU Unit and I/O Interface Unit.	---

Note One End Cover is provided with the CPU Unit and with an I/O Interface Unit.

Others

Name	Model	Specifications
DIN Track	PFP-50N	Track length: 50 cm, height: 7.3 mm
	PFP-100N	Track length: 1 m, height: 7.3 mm
	PFP-100N2	Track length: 1 m, height: 16 mm
	PFP-M	Stopper to prevent Units from moving on the track. Two each are provided with the CPU Unit and with an I/O Interface Unit.
Programming Device Connecting Cable for peripheral (USB) port	Commercially available USB cable	PLC-side Connectors (Type-C)
Programming Device Connecting Cables for serial port	XW2Z-200S-CV	Connects to IBM PC/AT computer D-Sub 9-pin connector (Cable length: 2.0 m). Uses static-resistant connector.
	XW2Z-500S-CV	Connects to IBM PC/AT computer D-Sub 9-pin connector (Cable length: 5.0 m). Uses static-resistant connector.
	XW2Z-200S-V	Connects to IBM PC/AT computer D-Sub 9-pin connector. (Cable length: 2.0 m)
	XW2Z-500S-V	Connects to IBM PC/AT computer D-Sub 9-pin connector. (Cable length: 5.0 m)
Connecting Cable for EtherNet/IP port	Commercially available 100Base-TX twisted-pair cable	Use STP (shielded twisted-pair) cable of category 5 or 5e.
Communications Adaptor (RS-422A Converter)	CJ1W-CIF11	Current consumption at 5 V: 0.04 A (not isolated)
RS-232C/RS-422A Link Adapter	NT-AL001	Maximum distance: 500 m; only RS-422A is supported. Current consumption at 5 V: 0.15 A (isolated)
MIL Flat Cable Connector for Pulse I/O Modules	XG4M-4030-T	40-pin MIL connector, pressure-welded type (This connector is used by user to make a cable.)
Connector-Terminal Block Conversion Units for Pulse I/O Modules	XW2D-40G6	Slim model (M3 screw terminals), 40 terminals
	XW2R-E40GD-T	General-purposemodel (M3 screw terminals), 40 terminals
	XW2R-J40GD-T	General-purposemodel (slotted screw), 40 terminals
	XW2B-40G5	Through model (M3 screw terminals), 40 terminals
	XW2B-40G4	Through model (M3.5 screw terminals), 40 terminals
Connector-Terminal Block Conversion Cables for Pulse I/O Modules	XW2Z-C25K	Cable length: 0.25 m
	XW2Z-C50K	Cable length: 0.5 m
	XW2Z-100K	Cable length: 1 m
	XW2Z-150K	Cable length: 1.5 m
	XW2Z-200K	Cable length: 2 m
	XW2Z-300K	Cable length: 3 m
	XW2Z-500K	Cable length: 5 m
Servo Relay Units for Pulse I/O Modules	XW2B-20J6-8A	To connect one axis
	XW2B-20J6-9A	To connect two axes

Name			Model	Specifications
Servo Relay Unit Connec-tion Cables	G5 Series	CJ2M Pulse I/O Module side	XW2Z-050J-A33	Cable length: 0.5 m
			XW2Z-100J-A33	Cable length: 1 m
		Servo Drive side	XW2Z-100J-B31	Cable length: 1 m
			XW2Z-200J-B31	Cable length: 2 m
	SMART-STEP 2 Series	CJ2M Pulse I/O Module side	XW2Z-050J-A33	Cable length: 0.5 m
			XW2Z-100J-A33	Cable length: 1 m
		Servo Drive side	XW2Z-100J-B32	Cable length: 1 m
			XW2Z-200J-B32	Cable length: 2 m
Battery Set			CJ1W-BAT01	For CPU Unit
Support Software		CX-One	CXONE-AL□□D-V□	CX-One is an FA Integrated Tool Package that integrates the PLC, network, HMI, components, motion control, and PLC-based process control. • CX-Programmer • CX-Integrator • SwitchBox Utility • CX-Simulator • CX-Protocol • CX-Designer • CX-Thermo • CX-Position • CX-Motion/CX-Motion-NCF/CX-Motion-MCH • CX-Drive • CX-Process Tool • NS Faceplate Auto-Builder • CX-FLnet • Network Configurator

2-1-3 Expansion Racks

When adding on Configuration Units beyond those mounted on the CPU Unit, up to seven CJ-series Expansion Racks can be connected to the CPU Unit.

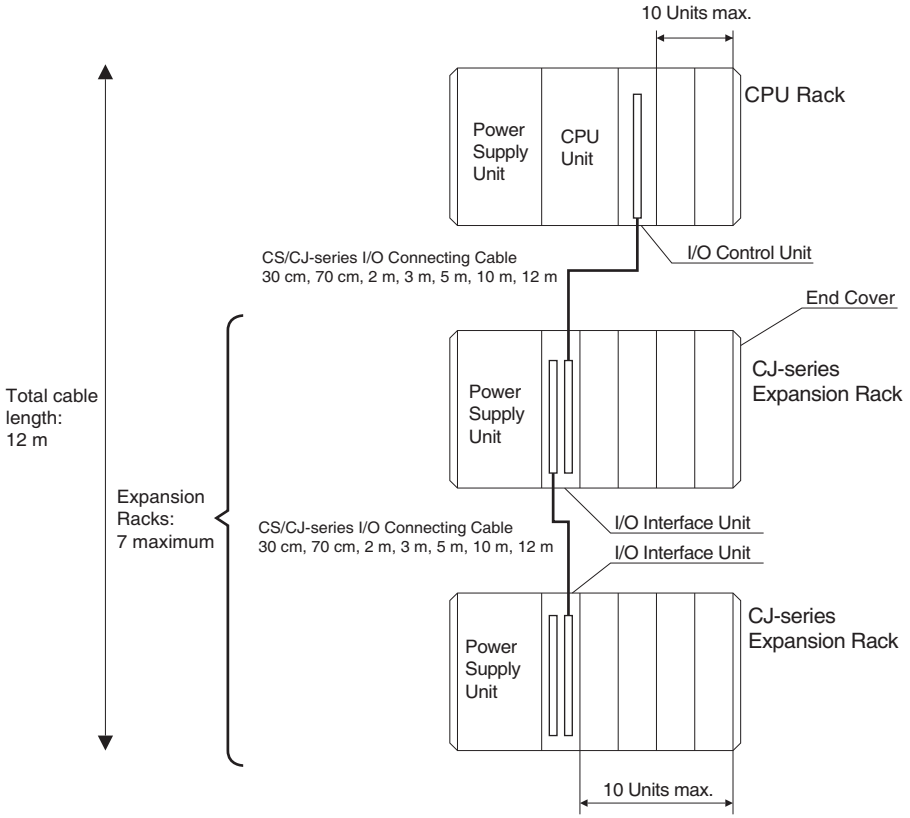

CS/CJ-series I/O Connecting Cables

Cable	Length
CS1W-CN313	0.3 m
CS1W-CN713	0.7 m
CS1W-CN223	2 m
CS1W-CN323	3 m
CS1W-CN523	5 m
CS1W-CN133	10 m
CS1W-CN133-B2	12 m

Units

Units for CJ-series Expansion Racks

Rack	Configuration	Remarks
CJ-series Expansion Racks	CJ-series Power Supply Unit	One required for each Expansion Rack. (An I/O Control Unit is required on the CJ-series CPU Rack.)
	I/O Interface Unit (one End Cover included.)	
	CJ-series Basic I/O Units	A total of up to 10 Units can be connected to the CPU Rack and to each of the Expansion Racks. (An error will occur if 11 or more Units are connected.)
	CJ-series Special I/O Units	
	CJ-series CPU Bus Units	
	End Cover	Must be connected to the right end of the Expansion Rack. (One End Cover is provided with the I/O Interface Unit. A fatal error will occur if the End Cover is not connected.)
	CS/CJ-series I/O Connecting Cable	Required to connect the I/O Interface Unit to the I/O Control Unit or previous I/O Interface Unit.

CJ-series Power Supply Unit

Model	Power supply voltage	Output capacity		Functions
		5 VDC	24 VDC	
CJ1W-PA205R	100 to 240 VAC	5.0 A	0.8 A	RUN output
CJ1W-PA205C	100 to 240 VAC	5.0 A	0.8 A	Replacement notification
CJ1W-PA202	100 to 240 VAC	2.8 A	0.4 A	---
CJ1W-PD025	24 VDC	5.0 A	0.8 A	---
CJ1W-PD022	24 VDC (non-insulated type)	2.0 A	0.4 A	---

I/O Interface Unit

Model	Specifications	Current consumption (A)		Weight
		5 VDC	24 VDC	
CJ1W-II101	One Interface Unit is required for each CJ-series Expansion Rack. One End Cover is provided with each Unit.	0.13	---	130 g max.*1

*1 Includes the weight of the End Cover.

● End Cover

Model	Specifications	Current consumption (A)	Weight
CJ1W-TER01	Must be connected to the right end of the CPU Rack. (A fatal error will occur if the End Cover is not connected to the right end of the Rack.) One End Cover is provided with the CPU Unit and with an I/O Interface Unit.	Included with the CPU Unit or I/O Interface Unit.	---

● CS/CJ-series I/O Connecting Cables

Model	Specifications	Cable length
CS1W-CN313	An I/O Connecting Cable connects an I/O Control Unit (CJ1W-IC101) to an I/O Interface Unit (CJ1W-II101), or connects an I/O Interface Unit to another I/O Interface Unit.	0.3 m
CS1W-CN713		0.7 m
CS1W-CN223		2 m
CS1W-CN323		3 m
CS1W-CN523		5 m
CS1W-CN133		10 m
CS1W-CN133-B2		12 m

2-1-4 Configuration Units

Maximum Number of Units

A maximum of 10 Units can be connected to the CPU Rack for a CJ3 CPU Unit or to an Expansion Rack. There are no restrictions in the number of each model of Unit based on location.

Note A fatal error will occur and the CPU Unit will not operate if more than the allowable number of Units is connected to a CJ3 CPU Rack or to an Expansion Rack.

Models of Configuration Units

The Configuration Units with which the CJ3 CPU Unit can exchange data are classified into three groups. The number of Units that can be mounted depends on the type of Unit.

Units	Description	Unit identification method
Basic I/O Units	Basic I/O Units are used for discrete inputs and outputs.	Identified by the CPU Unit according to mounting position.
Special I/O Units	Special I/O Units are more advanced than Basic I/O Units. They support functions other than discrete inputs and outputs. Examples: Analog I/O Units and High-speed Counter Units Special I/O Units have a smaller area for exchanging data with the CPU Unit than CPU Bus Units (including Network Communications Units).	Identified by the CPU Unit using unit numbers 0 to 95 set with the rotary switches on the front panel of the Unit.
CPU Bus Unit	CPU Units are advanced units that exchange data with the CPU Unit via the CPU bus. Examples: Network Communications Units and Serial Communications Units CPU Bus Units have a larger area for exchanging data with the CPU Unit than Special I/O Units.	Identified by the CPU Unit using unit number 0 to F set with the rotary switch on the front panel of the Unit.

● Number of mountable Units

Type	CJ3M-CPU1□/3□
Basic I/O Units	80 Units max.
Special I/O Units	80 Units max.
CPU Bus Units	16 Units max.*
System total	80 Units max.

* The maximum number of CJ3M-CPU3□ Units is 15.

Configuration Units

● CJ-series Basic I/O Units

Input Units

Name	Specifications	Model	Number of bits allocated	Current consumption (A)		Weight
				5 VDC	24 VDC	
DC Input Units	Terminal block 12 to 24 VDC, 8 inputs	CJ1W-ID201	16*1	0.08	---	110 g max.
	Terminal block 24 VDC, 16 inputs	CJ1W-ID211	16	0.08	---	110 g max.
		CJ1W-ID212*2	16	0.13	---	110 g max.
	Fujitsu/OTAX connector 24 VDC, 32 inputs	CJ1W-ID231	32	0.09	---	70 g max.
	MIL connector 24 VDC, 32 inputs	CJ1W-ID232*3	32	0.09	---	70 g max.
		CJ1W-ID233*2*3	32	0.20	---	70 g max.
	Fujitsu/OTAX connector 24 VDC, 64 inputs	CJ1W-ID261*3	64	0.09	---	110 g max.
	MIL connector 24 VDC, 64 inputs	CJ1W-ID262*3	64	0.09	---	110 g max.
AC Input Units	200 to 240 VAC, 8 inputs	CJ1W-IA201	16*1	0.08	---	130 g max.
	100 to 120 VAC, 16 inputs	CJ1W-IA111	16	0.09	---	130 g max.
Interrupt Input Units	24 VDC, 16 inputs	CJ1W-INT01*4	16	0.08	---	110 g max.
Quick-response Input Units	24 VDC, 16 inputs	CJ1W-IDP01	16	0.08	---	110 g max.
B7A Interface Units	64 inputs	CJ1W-B7A14	64	0.07	---	80 g max.

*1 Although 16 I/O bits are allocated, only 8 of these can be used for external I/O. This Unit is also treated as a 16-point I/O Unit in the I/O tables.

*2 The ON/OFF response time for the CJ1W-ID212/CJ1W-ID233 is shorter than for the CJ1W-ID211/CJ1W-ID232, as shown below.

- ON response time: 20 μs improved to 15 μs
- OFF response time: 400 μs improved to 90 μs

*3 The cable-side connector is not provided with Units equipped with cables. Purchase the connector separately (Refer to *5-3-3 Wiring Basic I/O Units with Connectors*.), or use an OMRON Connector- Terminal Block Conversion Unit or I/O Terminal (Refer to *5-3-4 Connecting to Connector-Terminal Block Conversion Units or I/O Relay Terminals*.).

*4 An Interrupt Input Unit can be connected only in a CPU Rack. Connect the Interrupt Input Units in slots 0 to 4 on the CPU Rack. An I/O setting error will occur if an Interrupt Input Unit is connected in other positions on the CPU Rack or to any position on an Expansion Rack. Up to two Interrupt Input Units can be connected.

Output Units

Name		Specifications	Model	Number of bits allocated	Current consumption (A)		Weight
					5 VDC	24 VDC	
Relay Output Units		Terminal block, 250 VAC/24 VDC, 2 A; 8 points, independent contacts	CJ1W-OC201	16*1	0.09	0.048 (0.006 × Number of ON outputs)	140 g max.
		Terminal block, 250 VAC/24 VDC, 2 A; 16 points	CJ1W-OC211	16	0.11	0.096 (0.006 × Number of ON outputs)	170 g max.
Triac Output Unit		Terminal block, 250 VAC, 0.6 A; 8 points	CJ1W-OA201 CJ1W-OA201-1	16*1	0.22	---	150 g max.
Transistor Output Units	Sinking outputs	Terminal block, 12 to 24 VDC, 2 A; 8 outputs	CJ1W-OD201	16*1	0.09	---	110 g max.
		Terminal block, 12 to 24 VDC, 0.5 A; 8 outputs	CJ1W-OD203	16*1	0.10	---	110 g max.
		Terminal block, 12 to 24 VDC, 0.5 A; 16 outputs	CJ1W-OD211	16	0.10	---	110 g max.
		Terminal block, 24 VDC, 0.5 A; 16 outputs	CJ1W-OD213*2	16	0.15	---	110 g max.
		Fujitsu/OTAX connector, 12 to 24 VDC, 0.5 A; 32 outputs	CJ1W-OD231*3	32	0.14	---	70 g max.
		MIL connector, 12 to 24 VDC, 0.5 A; 32 outputs	CJ1W-OD233*3	32	0.14	---	70 g max.
		MIL connector, 24 VDC, 0.5 A; 32 outputs	CJ1W-OD234*2*3	32	0.22	---	70 g max.
		Fujitsu/OTAX connector, 12 to 24 VDC, 0.3 A; 64 outputs	CJ1W-OD261*3	64	0.17	---	110 g max.
		MIL connector, 12 to 24 VDC, 0.3 A; 64 outputs	CJ1W-OD263*3	64	0.17	---	110 g max.
	Sourcing outputs	Terminal block, 24 VDC, 2 A; 8 outputs, load short-circuit protection and disconnected line detection	CJ1W-OD202	16*1	0.11	---	120 g max.
		Terminal block, 24 VDC, 0.5 A; 8 outputs, load short-circuit protection	CJ1W-OD204	16*1	0.10	---	120 g max.
		Terminal block, 24 VDC, 0.5 A; 16 outputs, load short-circuit protection	CJ1W-OD212	16	0.10	---	120 g max.
		MIL connector, 24 VDC, 0.5 A; 32 outputs, load short-circuit protection	CJ1W-OD232*3	32	0.15	---	80 g max.
		MIL connector, 12 to 24 VDC, 0.3 A; 64 outputs	CJ1W-OD262*3	64	0.17	---	110 g max.
B7A Interface Units		64 outputs	CJ1W-B7A04	64	0.07	---	80 g max.

*1 Although 16 I/O bits are allocated, only 8 of these can be used for external I/O. This Unit is also treated as a 16-point I/O Unit in the I/O tables.

*2 The ON/OFF response time for the CJ1W-OD213/CJ1W-OD234 is shorter than for the CJ1W-OD211/CJ1W-OD233, as shown below.

- ON response time: 0.1 ms improved to 0.015 ms
- OFF response time: 0.8 ms improved to 0.08 ms

*3 The cable-side connector is not provided with Units equipped with cables. Purchase the connector separately (Refer to *5-3-3 Wiring Basic I/O Units with Connectors*.), or use an OMRON Connector- Terminal Block Conversion Unit or I/O Terminal (Refer to *5-3-4 Connecting to Connector-Terminal Block Conversion Units or I/O Relay Terminals*.).

Mixed I/O Units

Name		Specifications	Model	Number of bits allocated	Current consumption (A)		Weight
					5 VDC	24 VDC	
24-VDC Input/ Transistor Output Units	Sinking	Fujitsu/OTAX connector Inputs: 24 VDC, 16 inputs Outputs: 12 to 24 VDC, 0.5 A; 16 outputs	CJ1W-MD231*1	32	0.13	---	90 g max.
		Fujitsu/OTAX connector Inputs: 24 VDC, 32 inputs Outputs: 12 to 24 VDC, 0.3 A; 32 outputs	CJ1W-MD261*1	64	0.14	---	110 g max.
		MIL connector Inputs: 24 VDC, 16 inputs Outputs: 12 to 24 VDC, 0.5 A; 16 outputs	CJ1W-MD233*1	32	0.13	---	90 g max.
		MIL connector Inputs: 24 VDC, 32 inputs Outputs: 12 to 24 VDC, 0.3 A; 32 outputs	CJ1W-MD263*1	64	0.14	---	110 g max.
	Sourcing	MIL connector Inputs: 24 VDC, 16 inputs Outputs: 24 VDC, 0.5 A; 16 outputs Load-short circuit protection	CJ1W-MD232*1	32	0.13	---	80 g max.
TTL I/O Units		MIL connector Inputs: TTL (5 VDC), 32 inputs Outputs: TTL (5 VDC, 35 mA), 32 outputs	CJ1W-MD563*1	64	0.19	---	110 g max.
B7A Interface Units		32 inputs, 32 outputs	CJ1W-B7A22	64	0.07	---	80 g max.

*1 The cable-side connector is not provided with Units equipped with cables. Purchase the connector separately (Refer to *5-3-3 Wiring Basic I/O Units with Connectors*.), or use an OMRON Connector- Terminal Block Conversion Unit or I/O Terminal (Refer to *5-3-4 Connecting to Connector-Terminal Block Conversion Units or I/O Relay Terminals*.).

● CJ-series Special I/O Units

Type	Name	Specifications	Model	Number of words allocated (CIO 2000 to CIO 2959)	Number of words allocated (D20000 to D29599)	Unit No.	Number of mountable Units	Current consumption (A)		Weight
								5 VDC	24 VDC	
Special I/O Units	General-purpose Universal Analog Input Unit	4 inputs, fully universal	CJ1W-AD04U	10 words	100 words	0 to 95	40 Units	0.32	---	150 g max.
	Analog Input Units	8 inputs (4 to 20 mA, 1 to 5 V, etc.)	CJ1W-AD081-V1	10 words	100 words	0 to 95	40 Units	0.42	---	140 g max.
		4 inputs (4 to 20 mA, 1 to 5 V, etc.)	CJ1W-AD041-V1	10 words	100 words	0 to 95	40 Units	0.42	---	140 g max.
		4 inputs (4 to 20 mA, 1 to 5 V, etc.)	CJ1W-AD042	10 words	100 words	0 to 95	40 Units	0.52	---	150 g max.
	Analog Output Units	4 outputs (1 to 5 V, 4 to 20 mA, etc.)	CJ1W-DA041	10 words	100 words	0 to 95	40 Units	0.12	---	150 g max.
		2 outputs (1 to 5 V, 4 to 20 mA, etc.)	CJ1W-DA021	10 words	100 words	0 to 95	40 Units	0.12	---	150 g max.
		8 outputs (1 to 5 V, 0 to 10 V, etc.)	CJ1W-DA08V	10 words	100 words	0 to 95	40 Units	0.14	---	150 g max.
		8 outputs (4 to 20 mA)	CJ1W-DA08C	10 words	100 words	0 to 95	40 Units	0.14	---	150 g max.
		4 outputs (1 to 5 V, 0 to 10 V, etc.)	CJ1W-DA042V	10 words	100 words	0 to 95	40 Units	0.40	---	150 g max.
	Analog I/O Unit	4 inputs (1 to 5 V, 4 to 20 mA, etc.) 2 outputs (1 to 5 V, 4 to 20 mA, etc.)	CJ1W-MAD42	10 words	100 words	0 to 95	40 Units	0.58	---	150 g max.
	Isolated-type High-resolution Universal Input Unit	4 inputs, fully universal Resolution: 1/256,000, 1/64,000, 1/16,000	CJ1W-PH41U	10 words	100 words	0 to 95	40 Units	0.30	---	150 g max.
	Isolated-type Thermocouple Input Units	4 thermocouple inputs	CJ1W-PTS51	10 words	100 words	0 to 95	40 Units	0.25	---	150 g max.
		2 thermocouple inputs	CJ1W-PTS15	10 words	100 words	0 to 95	40 Units	0.18	---	150 g max.
	Isolated-type Resistance Thermometer Input Units	4 resistance thermometer inputs	CJ1W-PTS52	10 words	100 words	0 to 95	40 Units	0.25	---	150 g max.
		2 resistance thermometer inputs	CJ1W-PTS16	10 words	100 words	0 to 95	40 Units	0.18	---	150 g max.
	Direct Current Input Unit	DC voltage or DC current, 2 inputs	CJ1W-PDC15	10 words	100 words	0 to 95	40 Units	0.18	---	150 g max.
	Temperature Control Units	4 control loops, thermocouple inputs, NPN outputs	CJ1W-TC001	20 words	200 words	0 to 94 (uses words for 2 unit numbers)	40 Units	0.25	---	150 g max.
		4 control loops, thermocouple inputs, PNP outputs	CJ1W-TC002	20 words	200 words	0 to 94 (uses words for 2 unit numbers)	40 Units	0.25	---	150 g max.
		2 control loops, thermocouple inputs, NPN outputs, heater burn-out detection	CJ1W-TC003	20 words	200 words	0 to 94 (uses words for 2 unit numbers)	40 Units	0.25	---	150 g max.
		2 control loops, thermocouple inputs, PNP outputs, heater burn-out detection	CJ1W-TC004	20 words	200 words	0 to 94 (uses words for 2 unit numbers)	40 Units	0.25	---	150 g max.

Type	Name	Specifications	Model	Number of words allocated (CIO 2000 to CIO 2959)	Number of words allocated (D20000 to D29599)	Unit No.	Number of mountable Units	Current consumption (A)		Weight
								5 VDC	24 VDC	
Special I/O Units	Temperature Control Units	4 control loops, temperature- resistance thermometer inputs, NPN outputs	CJ1W-TC101	20 words	200 words	0 to 94 (uses words for 2 unit numbers)	40 Units	0.25	---	150 g max.
		4 control loops, temperature- resistance thermometer inputs, PNP outputs	CJ1W-TC102	20 words	200 words	0 to 94 (uses words for 2 unit numbers)	40 Units	0.25	---	150 g max.
		2 control loops, temperature-resistance thermometer inputs, NPN outputs, heater burnout detection	CJ1W-TC103	20 words	200 words	0 to 94 (uses words for 2 unit numbers)	40 Units	0.25	---	150 g max.
		2 control loops, temperature-resistance thermometer inputs, PNP outputs, heater burnout detection	CJ1W-TC104	20 words	200 words	0 to 94 (uses words for 2 unit numbers)	40 Units	0.25	---	150 g max.
	Position Control Units	1 axis, pulse output; open collector output	CJ1W-NC113	10 words	100 words	0 to 95	40 Units	0.25	---	100 g max.
		2 axes, pulse outputs; open collector outputs	CJ1W-NC213	10 words	100 words	0 to 95	40 Units	0.25	---	100 g max.
			CJ1W-NC214*1*2	18 words*3	None	0 to 94 (uses words for 2 unit numbers)	5 Units/ Rack	0.27	---	170 g max.
		4 axes, pulse outputs; open collector outputs	CJ1W-NC413	20 words	200 words	0 to 94 (uses words for 2 unit numbers)	40 Units	0.36	---	150 g max.
			CJ1W-NC414*1*2	18 words*3	None	0 to 94 (uses words for 2 unit numbers)	5 Units/ Rack	0.31	---	220 g max.
		1 axis, pulse output; line driver output	CJ1W-NC133	10 words	100 words	0 to 95	40 Units	0.25	---	100 g max.
		2 axes, pulse outputs; line driver outputs	CJ1W-NC233	10 words	100 words	0 to 95	40 Units	0.25	---	100 g max.
			CJ1W-NC234*1*2	18 words*3	None	0 to 94 (uses words for 2 unit numbers)	5 Units/ Rack	0.27	---	170 g max.
		4 axes, pulse outputs; line driver outputs	CJ1W-NC433	20 words	200 words	0 to 94 (uses words for 2 unit numbers)	40 Units	0.36	---	150 g max.
			CJ1W-NC434*1*2	18 words*3	None	0 to 94 (uses words for 2 unit numbers)	5 Units/ Rack	0.31	---	220 g max.
		Space Unit*4	CJ1W-SP001	None	None	---	---	---	---	50 g max.

Type	Name	Specifications	Model	Number of words allocated (CIO 2000 to CIO 2959)	Number of words allocated (D20000 to D29599)	Unit No.	Number of mountable Units	Current consumption (A)		Weight
								5 VDC	24 VDC	
Special I/O Units	ID Sensor Units	V600-series single-head type	CJ1W-V600C11	10 words	100 words	0 to 95	40 Units	0.26	0.12	120 g max.
		V600-series two-head type	CJ1W-V600C12	20 words	200 words	0 to 94 (uses words for 2 unit numbers)	40 Units	0.32	0.24	130 g max.
		V680-series single-head type	CJ1W-V680C11	10 words	100 words	0 to 95	40 Units	0.26	0.13	120 g max.
		V680-series two-head type	CJ1W-V680C12	20 words	200 words	0 to 94 (uses words for 2 unit numbers)	40 Units	0.32	0.26	130 g max.
	High-speed Counter Unit	Number of counter channels: 2, Maximum input frequency: 500 kHz, line driver compatible*5	CJ1W-CT021*6	40 words	400 words	0 to 92 (uses words for 4 unit numbers)	24 Units	0.28	---	100 g max.
	CompoBus/S Master Units	CompoBus/S remote I/O, 256 bits max.	CJ1W-SRM21	10 words or 20 words	None	0 to 95 or 0 to 94	40 Units	0.15	---	66 g max.*7
	CompoNet Master Unit	CompoNet remote I/O	CJ1W-CRM21							130 g max.
		Communications mode No. 0: 128 inputs/ 128 outputs for Word Slaves		20 words	None	0 to 94 (uses words for 2 unit numbers)	40 Units	0.40	---	
		Communications mode No. 1: 256 inputs/ 256 outputs for Word Slaves		40 words	None	0 to 92 (uses words for 4 unit numbers)	24 Units	0.40	---	
		Communications mode No. 2: 512 inputs/ 512 outputs for Word Slaves		80 words	None	0 to 88 (uses words for 8 unit numbers)	12 Units	0.40	---	
		Communications mode No. 3: 256 inputs/ 256 outputs for Word Slaves and 128 inputs/ 128 outputs for Bit Slaves		80 words	None	0 to 88 (uses words for 8 unit numbers)	12 Units	0.40	---	
		Communications mode No. 8: 1,024 inputs/ 1,024 outputs for Word Slaves and 256 inputs/ 256 outputs for Bit Slaves maximum		10 words	Depends on setting	0 to 95 (uses words for 1 unit number)	40 Units	0.40	---	

*1 With a CJ3 CPU Unit, up to 10 Configuration Units can be connected in the CPU Rack and in each Expansion Rack. The CJ1W-NC□□4, however, must be counted as two Units. Configure the Units to satisfy the following formula.
Number of CJ1W-NC□□4 Units × 2 + Number of other Units ≤ 10
For example, if five CJ1W-NC□□4 Units are connected to one Rack, no other Units can be connected.

*2 Synchronous Unit operation cannot be used with the CJ3M CPU Unit.

*3 In addition to the words allocated in the Special I/O Unit Area, up to 144 words are allocated according to the number of axes and functions uses. Word allocations are set using the CX-Programmer.

*4 The Space Unit is for Position Control Units.

*5 If interrupts to the CPU Unit are used, mount the Interrupt Input Unit in one of the slots 0 to 4 on the CPU Rack.

*6 Use the CJ1W-CT021 with the lot number 030121 (unit version 1.06) or later when using it in combination with the CJ3 CPU Unit.

*7 Includes the weight of accessory connectors.

● CJ-series CPU Bus Units

Type	Name	Specifications	Model	Number of words allocated (CIO 1500 to CIO 1899)	Unit No.	Maximum number of Units*1	Current consumption (A)		Weight
							5 VDC	24 VDC	
CPU Bus Units*1	High-speed Analog Input Unit	4 inputs: 80 µs/2 inputs, 160 µs/4 inputs	CJ1W-ADG41*2	25 words	0 to F	16 Units*3	0.65	---	150 g max.
	Controller Link Units	Wired data links	CJ1W-CLK23	25 words	0 to F	8 Units	0.35	---	110 g max.
	Serial Communications Units	One RS-232C port and one RS-422A/485 port	CJ1W-SCU41-V1	25 words	0 to F	16 Units*3	0.38*4	---	110 g max.
		Two RS-232C ports	CJ1W-SCU21-V1				0.28*4		
		Two RS-422A/485 ports	CJ1W-SCU31-V1				0.38		
		Two RS-232C ports High-speed models	CJ1W-SCU22			16 Units*3	0.28*4		160 g max.
		Two RS-422A/485 ports High-speed models	CJ1W-SCU32				0.4		120 g max.
		One RS-232C port and one RS-422A/485 port High-speed models	CJ1W-SCU42				0.36*4		140 g max.
	Ethernet Units	100Base-TX, FINS communications, socket service, FTP server, and mail communications	CJ1W-ETN21	25 words	0 to F	4 Units	0.37	---	100 g max.
	EtherNet/IP Unit	Tag data links, FINS communications, CIP message communications, FTP server, etc.	CJ1W-EIP21	25 words	0 to F	*5	0.41	---	94 g max.
		Tag data links, FINS communications, CIP message communications, FTP server, socket communications, security functions etc.	CJ1W-EIP21S	25 words	0 to F	*5	0.65	---	91 g max.
	FL-net Unit	100Base-TX cyclic transmissions and message transmissions	CJ1W-FLN22	25 words	0 to F	4 Units	0.37	---	100 g max.
	DeviceNet Unit	DeviceNet remote I/O, 2,048 points; Both Master and Slave functions, Automatic allocation possible without Configurator	CJ1W-DRM21	25 words*6	0 to F	16 Units*3	0.29	---	118 g max.*7
	EtherCAT-compatible Position Control Units*8	2 servo axes	CJ1W-NC281	25 words	0 to F	16 Units*3	0.46	---	110 g max.
		4 servo axes	CJ1W-NC481						
		8 servo axes	CJ1W-NC881						
		16 servo axes	CJ1W-NCF81						
		4 servo axes and 64 I/O slaves	CJ1W-NC482						
		8 servo axes and 64 I/O slaves	CJ1W-NC882						

Type	Name	Specifications	Model	Number of words allocated (CIO 1500 to CIO 1899)	Unit No.	Maximum number of Units*1	Current consumption (A)		Weight
							5 VDC	24 VDC	
CPU Bus Units*1	Position Control Units supporting MECHATROLINK-II communications	MECHATROLINK-II, 16 axes max.	CJ1W-NCF71 (-MA)	25 words	0 to F	16 Units*3	0.36	---	95 g max.
	Motion Control Units supporting MECHATROLINK-II communications	MECHATROLINK-II, Real axes: 30 max., Virtual axes: 2 max., Special motion control language	CJ1W-MCH71	25 words	0 to F	3 Units/Rack *9	0.60	---	210 g max.
	SYSMAC SPU Unit (High-speed Storage and Processing Unit)	One CF card type I/II slot (used with OMRON HMC-EF□□□ Memory Card), one Ethernet port	CJ1W-SPU01-V2*10	Not used.	0 to F	16 Units*3	0.56	---	180 g max.

*1 Some CPU Bus Units are allocated words in the CPU Bus Unit Setup Area. The system must be designed so that the number of words allocated in the CPU Bus Unit Setup Area does not exceed its capacity. Refer to *4-6-2 CPU Bus Unit Setup Area in CJ2/CJ3 CPU Unit Software User's Manual* (Cat. No. W473).
There may also be limits due to the capacity of the Power Supply Unit that you are using or the maximum number of Units to which memory can be allocated in the CPU But Unit Setup Area.

*2 If interrupts to the CPU Unit are used, mount the Interrupt Input Unit in one of the slots 0 to 4 on the CPU Rack.

*3 Up to 15 Units can be connected for a CJ3M-CPU3□.

*4 Increases by 0.15 A/Unit when an NT-AL001 RS-232C/RS-422A Link Adapter is used. Increases by 0.04 A/Unit when a CJ1W-CIF11 RS-422A Converter is used.

*5 Up to seven Units can be connected for a CJ3M-CPU3□, up to eight Units can be connected for a CJ3M-CPU1□.

*6 Slave I/O are allocated in DeviceNet Area (CIO 3200 to CIO 3799).

*7 Includes the weight of accessory connectors.

*8 Only OMNUC G5-series, and 1S-Series Servo Drives with Built-in EtherCAT can be connected.

*9 When mounting to a CPU Rack or a Expansion Rack, one of these Units uses the space of three Units.

*10 Use version 2 or higher of the SYSMAC SPU Unit with a CJ3 CPU Unit.

2-1-5 Calculating Unit Current Consumption

The amount of current/power that can be supplied to the Units mounted in a Rack is limited by the capacity of the Rack's Power Supply Unit. Refer to the following tables when designing your system so that the total current consumption of the mounted Units does not exceed the maximum current for each voltage group and the total power consumption does not exceed the maximum for the Power Supply Unit.

For details on calculating the current consumption of Units, refer to *2-1-2 CPU Rack*, *2-1-3 Expansion Racks*, and *2-1-4 Configuration Units*.

Maximum Current and Power Supplied by Power Supply Units

The following table shows the maximum currents and power that can be supplied by Power Supply Units in CPU Racks and Expansion Racks.

Note 1 When calculating current/power consumption in a CPU Rack, be sure to include the power required by the CPU Unit itself, as well as the I/O Control Unit if one or more Expansion Racks is connected.

2 Be sure to include the power required by the I/O Interface Unit when calculating current/power consumption in an Expansion Rack.

Power Supply Unit	Max. current consumption			Max. total power consumption
	5-V group (internal logic)	24-V group (relays)	24-V group (service)	
CJ1W-PA205R	5.0 A	0.8 A	None	25 W
CJ1W-PA205C	5.0 A	0.8 A	None	25 W
CJ1W-PA202	2.8 A	0.4 A	None	14 W
CJ1W-PD025	5.0 A	0.8 A	None	25 W
CJ1W-PD022	2.0 A	0.4 A	None	19.6 W

Example Calculations

Example 1: In this example, the following Units are mounted to a CPU Rack with a CJ1W-PA205R Power Supply Unit.

Unit	Model	Quantity	Voltage group	
			5-V	24-V
CPU Unit	CJ3M-CPU35	1	0.910 A	0.003 A
I/O Control Unit	CJ1W-IC101	1	0.020 A	---
Input Units	CJ1W-ID211	2	0.080 A	---
	CJ1W-ID231	2	0.090 A	---
Output Unit	CJ1W-OC201	2	0.090 A	0.048 A
Special I/O Unit	CJ1W-DA041	1	0.120 A	---
CPU Bus Unit	CJ1W-CLK23	1	0.350 A	---
Current consumption	Calculation		0.910 A + 0.020 A + 0.080 A × 2 + 0.090 A × 2 + 0.090 A × 2 + 0.120 A + 0.350 A	0.003 A + 0.048 A × 2
	Result		1.92 A (≤5.0 A)	0.099 A (≤0.8 A)
Power consumption	Calculation		1.92 A × 5 V = 9.6 W	0.099 A × 24 V = 2.376 W
	Result		9.6 W + 2.376 W = 11.976 W (≤25 W)	

Example 2: In this example, the following Units are mounted to a CJ-series Expansion Rack with a CJ1W-PA205R Power Supply Unit.

Unit	Model	Quantity	Voltage group	
			5-V	24-V
I/O Interface Unit	CJ1W-II101	1	0.130 A	---
Input Unit	CJ1W-ID211	2	0.080 A	---
Output Unit	CJ1W-OD231	8	0.140 A	---
Current consumption	Calculation		0.130 A + 0.080 A × 2 + 0.140 A × 8	---
	Result		1.41 A (≤5.0 A)	---
Power consumption	Calculation		1.41 A × 5 V = 7.05 W	---
	Result		7.05 W (≤25 W)	

Additional Information

Rack Current Consumption and Width Display

To display the current consumption and width of Units connected in the CPU Rack or Expansion Rack, select ***Current Consumption and Width*** from the Options Menu in the CJ3 CPU Unit I/O Table Window.

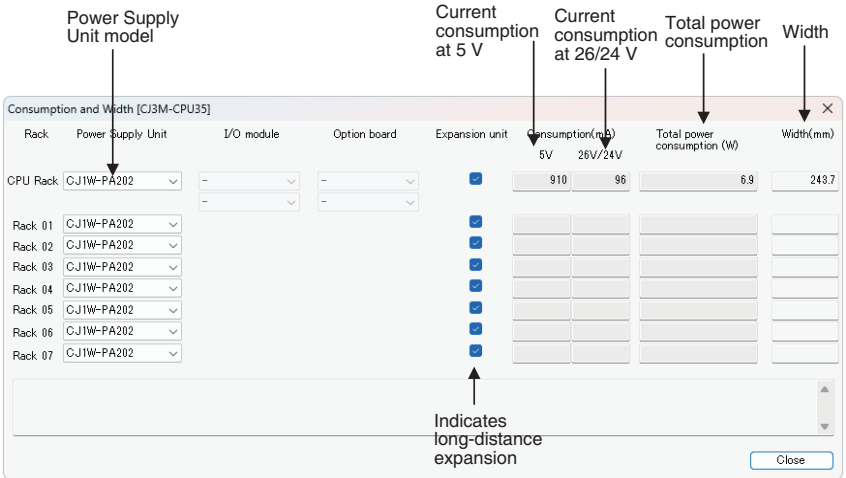

If the capacity of a Power Supply Unit is exceeded, it will be displayed in red.

2-1-6 Calculating Power Consumption

The ambient operating temperature at the control panel for mounting a CJ-series PLC must be no higher than 55°C. This section describes how to calculate the power consumption of a CPU Rack for use in the thermal design of the control panel.

Calculating Power Consumption

Use the following equation to calculate the average power consumption (W) of a CJ-series CPU Rack.

W = W_PLC + W_IO_ONOFF

- W_IO_ONOFF: Basic I/O Unit power consumption
- W_PLC: Basic PLC power consumption

● Basic PLC Power Consumption (W_PLC)

The basic PLC power consumption is calculated based on the overall power consumption of the PLC and the power conversion rate of the Power Supply Unit.

W_PLC = W_unit ÷ η

- W_unit:
  Total power consumption of Units mounted to the CPU Rack. For details on the current consumption and voltage of individual Units, refer to *2-1-4 Configuration Units*.
- η:
  Power Supply Unit power conversion rate.

The rate is 70% for the CJ Series, so use “0.7” in the calculation.

● Basic I/O Unit Power Consumption (W_IO_ONOFF)

The Basic I/O Unit power consumption is the total consumption for the Input Units and the Output Units.

- Input Units

Rated input voltage × Input current × Number of input points

- Output Units

Residual voltage × Maximum load current × Number of output points

Note For a CJ-series Basic I/O Unit with transistor outputs, use a residual voltage of 0.1 V in the calculation. For a CJ-series Basic I/O Unit with relay or triac outputs, use a residual voltage of 0 V in the calculation.

Calculation Examples

These examples show how to calculate the power consumption (W) for the following system.

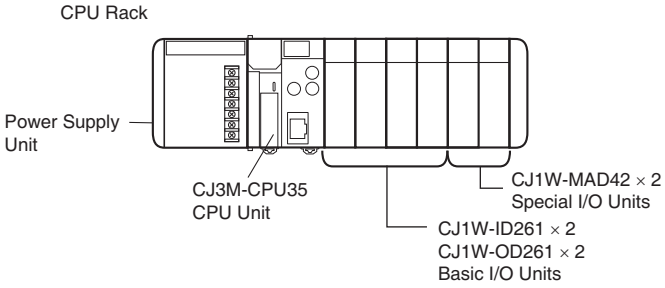

Units	Model	Quantity	5 VDC	Other
CPU Unit	CJ3M-CPU35	1 Unit	0.91 A	24VDC 0.003 A
Input Units	CJ1W-ID261	2 Units	0.09 A	Rated input voltage: 24 V Input current: 4.1 mA Number of input points: 64
Output Unit	CJ1W-OD261	2 Units	0.17 A	Residual voltage: 0.1 V Maximum load current: 0.3 A per point 6.4 A per Unit Number of output points: 64
Special I/O Units	CJ1W-MAD42	2 Units	0.58 A	---

● Basic PLC Power Consumption (W_PLC)

W_PLC = ((0.91 + 0.09 × 2 + 0.17 × 2 + 0.58 × 2) A × 5 V + 0.003 A × 24 V) ÷ 0.7 = 18.60 W

● Basic I/O Unit Power Consumption (W_IO_ONOFF)

W_IO_ONOFF = 24 V × 0.0041 A × 64 points × 2 Units + 0.1 V × 6.4 A × 2 Units = 13.88 W*

* The maximum load current of an Output Unit is limited for each Unit.

● Average Power Consumption (W)

W = W_PLC + W_IO_ONOFF = 32.48 W

2-2 Expanded System Configuration

This section describes the system configurations that can be connected by using the serial port that is built into the CJ3 CPU Unit, along with Communications Units and other Configuration Units.

2-2-1 Serial Communications

This expanded system can be connected via the CJ3 CPU Unit's built-in serial communications port or a Serial Communications Unit.

Various protocols, including Host Link and NT Link, can be used with the serial communications port. A particular protocol can be supported by switching the mode of the serial communications port.

For details on the serial communications modes that are supported, refer to *11-2 Serial Communications* in the *CJ2/CJ3 CPU Unit Software User's Manual* (Cat. No. W473).

Note Protocol macros are supported only for Serial Communications Units.

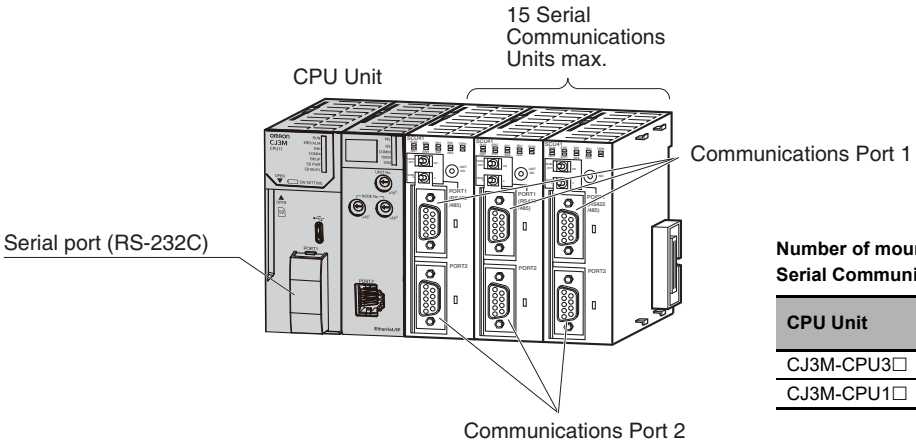

Number of mounted Serial Communication Units

CPU Unit	Number of mounted units
CJ3M-CPU3□	15 Units
CJ3M-CPU1□	16 Units

System Configuration Example

The serial port of the CPU Unit is used to connect to a host computer or peripheral tools such as CX-Programmer.

In addition, up to 16 Serial Communications Units can be connected to a single CPU Unit, making it possible to configure a flexible serial communications system by connecting devices with RS-232C or RS-422/485 ports (such as PLCs from other manufacturers, temperature controllers, bar code readers, ID systems, personal computers, board computers, and components).

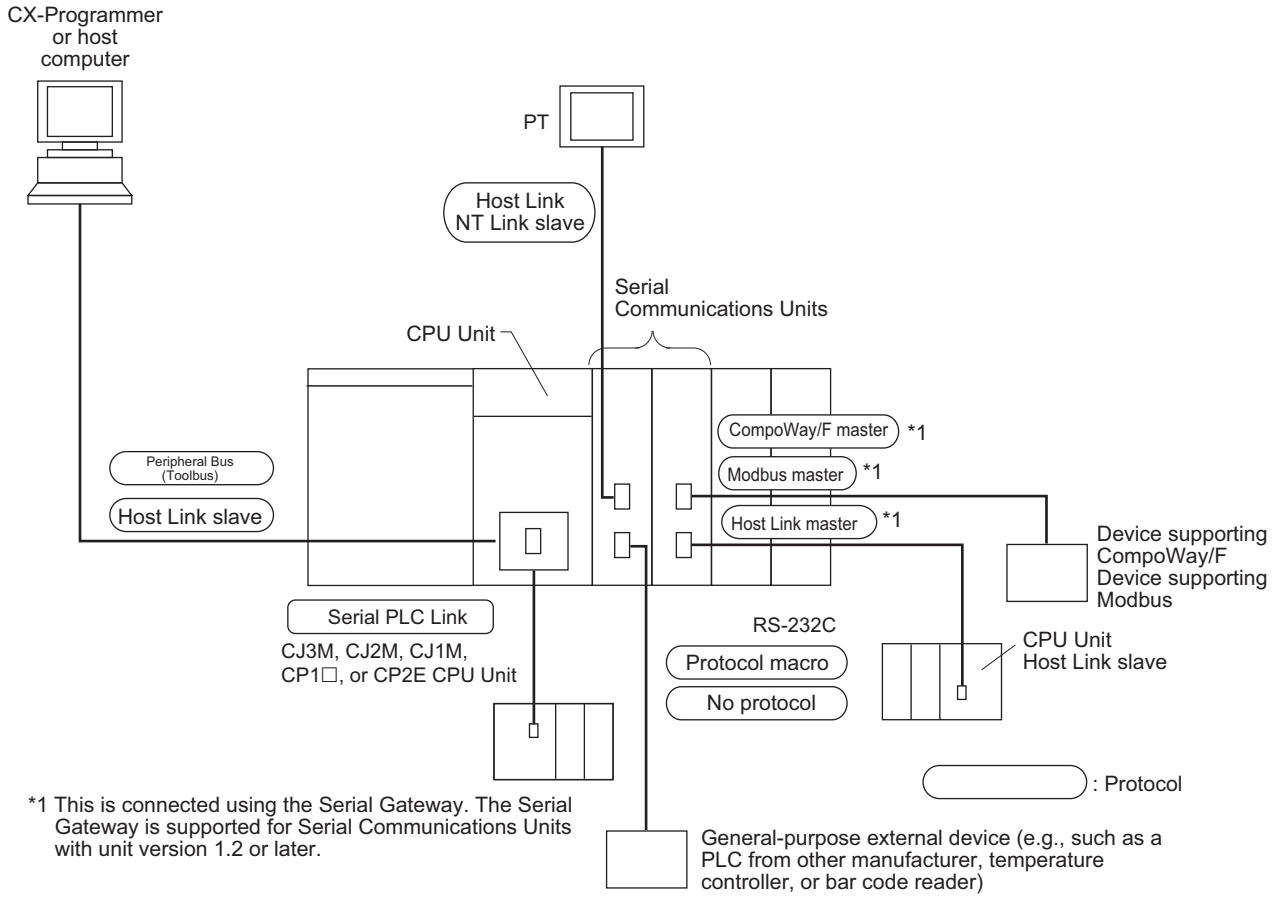

*1 This is connected using the Serial Gateway. The Serial Gateway is supported for Serial Communications Units with unit version 1.2 or later.

For details on the protocol modes that can be selected for each port, refer to *11-2-1 Overview of Serial Communications* in the *CJ2/CJ3 CPU Unit Software User's Manual* (Cat. No. W473).

2-2-2 Communications Networks

Communications Network Systems

The CJ Series supports the following communications networks. Select the appropriate network according to the applications. For details on communications networks, refer to *11-3 Communications Networks* in the *CJ2/CJ3 CPU Unit Software User's Manual* (Cat. No. W473).

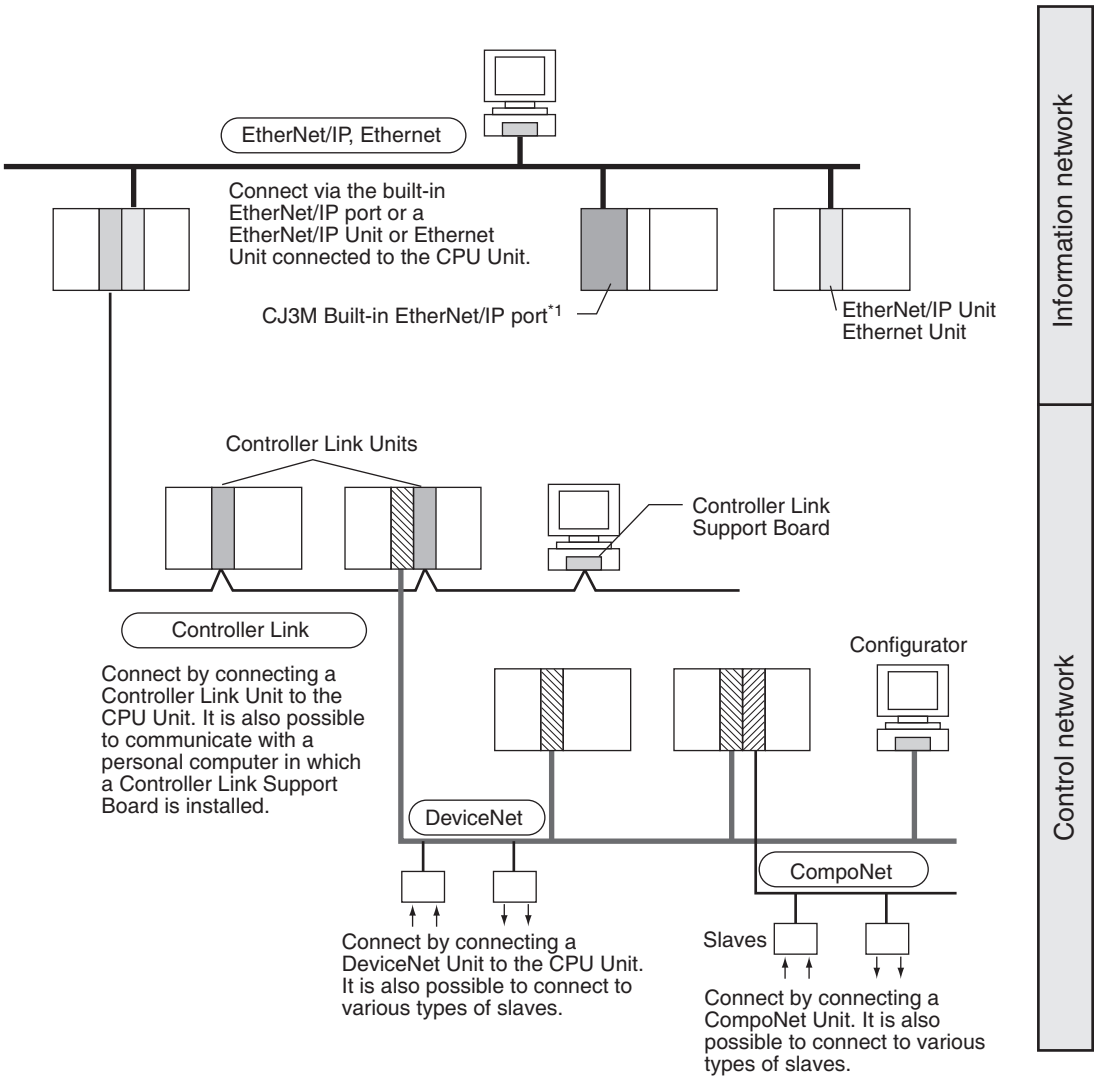

* The built-in CJ3M-CPU3□ EtherNet/IP port has the same performance and functions as those of the EtherNet/IP Unit (CJ1W-EIP21S).

Communications Network Overview

System	Network	Function	Communications	Communications Device
Information networks	EtherNet/IP	Between Host computer and PLC.	CIP, FINS message communications	Built-in EtherNet/IP port on CJ3M-CPU3□, or EtherNet/IP Unit
		Between PLCs.		
		Between Host computer and Memory Card installed in CPU Unit.	FTP server	
	Controller Link	Between PLC and personal computer directly connected to the Network.	FINS message communications	Controller Link Unit
			Data link (offset, simple settings)	
	RS-232C → Controller Link	Between Host Link computer and PLC on the Network.	Host Link commands and gateway.	RS-232C cables and Controller Link Unit
Control networks	EtherNet/IP	Between PLCs.	Tag data links	Built-in EtherNet/IP port on CJ3M-CPU3□ or EtherNet/IP Unit
	Controller Link		FINS message communications	Controller Link Unit
			Data link (offset, simple settings)	
	SYSMAC LINK DeviceNet		FINS message communications in an open network.	SYSMAC LINK DeviceNet Master Unit and Configurator
	DeviceNet	Between PLC and Network devices (Slaves).	Large-capacity remote I/O (fixed or free allocation) in an open network	DeviceNet Master Unit and Configurator
	CompoNet		High-speed, multi-point, multi-node remote I/O in an open network	CompoNet Master Unit

3

Nomenclature and Functions

This section gives the parts of a CJ3 PLC and describes the functions of the parts.

3-1 CPU Units 3-2
3-1-1 CPU Section 3-2
3-1-2 Built-in EtherNet/IP Section 3-8
3-2 Memory Card 3-13
3-2-1 Models and Specifications 3-13
3-2-2 Operating Procedures 3-13
3-2-3 Installing and Removing 3-14
3-3 Pulse I/O Modules 3-16
3-3-1 Models and Specifications 3-16
3-3-2 Part Names and Functions 3-16
3-4 Power Supply Units 3-19
3-4-1 Models and Specifications 3-19
3-4-2 Components 3-22
3-4-3 Selecting a Power Supply Unit 3-25
3-5 CJ-series Basic I/O Units 3-26
3-5-1 Basic I/O Units with Terminal Blocks 3-26
3-5-2 Thirty-two/Sixty-four-point Basic I/O Units with Connectors 3-28
3-6 I/O Control Units and I/O Interface Units 3-30
3-6-1 Component Names 3-30
3-6-2 System Configuration 3-30

3-1 CPU Units

3-1-1 CPU Section

Components and Functions

CJ3M-CPU3□ **CJ3M-CPU1□**

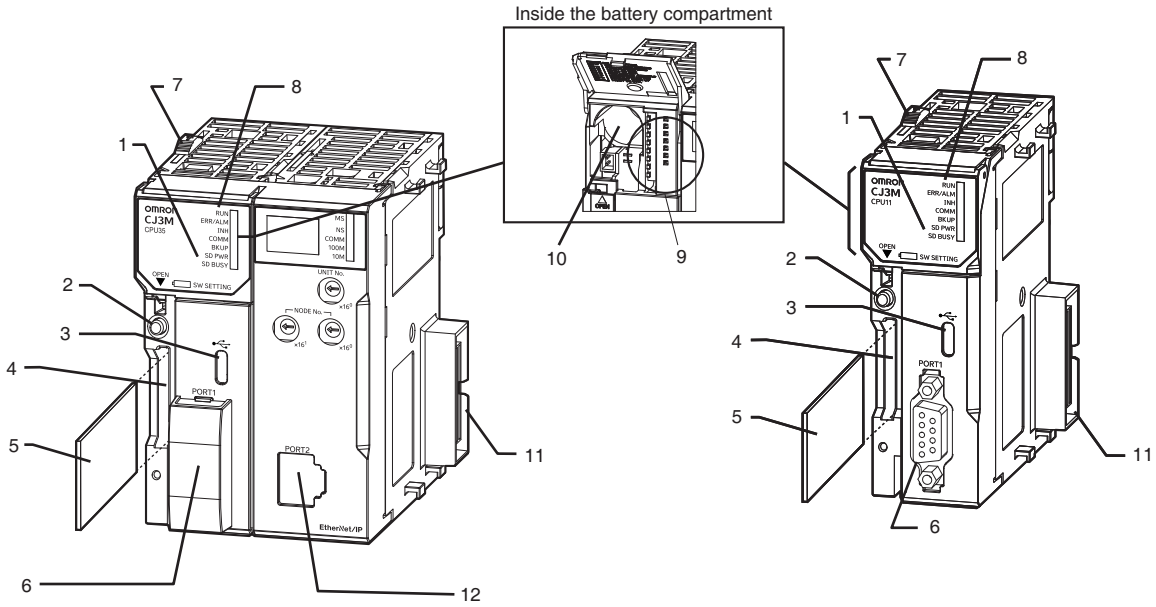

1. Battery Compartment Cover
   When you open the cover upward, you will find a battery slot and DIP switch.
2. Simple Backup/Memory Card Power Supply Switch (Refer to *3-2 Memory Card*.)
   Used to back up Memory Card data or turn OFF the power when removing the Memory Card.
3. Peripheral (USB) Port
   Connected to Programming Devices, such as the CX-Programmer
4. Memory Card Connector (Refer to *3-2 Memory Card*.)
   Connects the Memory Card to the CPU Unit.
5. Memory Card (Refer to *3-2 Memory Card*.)
   All CPU Unit data can be copied to a Memory Card to back up the data.
6. RS-232C Serial Port (Refer to *A-4 Connecting to a Serial Port on the CPU Unit*.)
   Connected to Programming Devices, Host Computers, general-purpose external devices, Programmable Terminals, and other devices.
7. Slider
   Secures the CPU Unit to the next Unit.
8. LED Indicators (Refer to the next page.)
   These indicators show the status of the CPU Unit:
   - Normal operation
   - Errors
   - Output OFF status
   - Communications status for the RS-232C ports
   - Backup status built-in flash memory
   - Memory Card status (accessing and supplying power)
9. DIP Switch (Refer to a following page.)
   Sets operations, such as user memory protection, automatic program transfer by Memory Card, serial port communications mode, and simple backup.
10. Battery Slot (Refer to *Battery*.)
    Install a separately sold battery (CJ1W-BAT01).
11. Connector
    Connected to the next Unit.
12. Built-in EtherNet/IP Section
    Refer to *3-1-2 Built-in EtherNet/IP Section* for information on the built-in EtherNet/IP Section.

CPU Unit Status Indicators

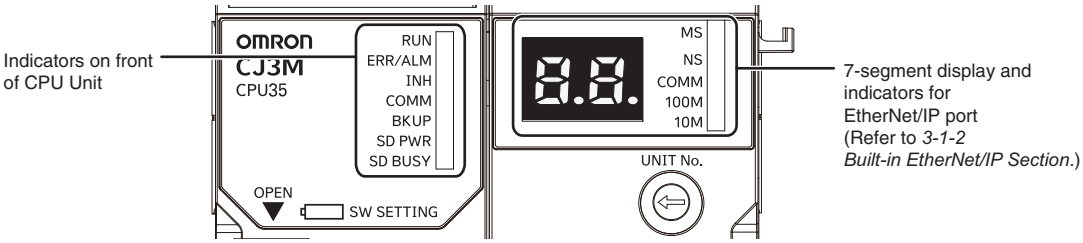

The CJ3 CPU Unit status can be checked with the CPU Unit Status Indicators. The following table describes these indicators.

Indicator	Color	Status	Meaning
RUN	Green	Lit	Lights when the PLC is operating normally in MONITOR or RUN mode. The program is being executed.
		Flashing	System download mode error or DIP switch settings error.
		OFF	PLC has stopped operating while in PROGRAM mode, or has stopped operating due to a fatal error, or is downloading data from the system.
ERR/ALM	Red	Lit	A fatal error (including FALS instruction execution) or a hardware error (watchdog timer error) was found in self-diagnosis. The CPU Unit will stop operating, and the outputs from all Output Units will turn OFF.
		Flashing	A non-fatal error was found (including FAL(006) instruction execution) in the self-diagnosis. The CPU Unit will continue operating.
		OFF	The CPU Unit is operating normally.
INH	Yellow	Lit	Output OFF Bit (A500.15) has been turned ON. The outputs from all Output Units will turn OFF.
		OFF	Output OFF Bit (A500.15) has been turned OFF.
COMM	Yellow	Flashing	The CPU Unit is communicating (sending or receiving) via the serial port (RS-232C).
		OFF	The CPU Unit is not communicating via the serial port (RS-232C).
BKUP	Yellow	Lit	User program and parameter area data is being backed up to flash memory in the CPU Unit or being restored from flash memory after the power supply to the PLC was turned ON. *1
		OFF	Data is not being written to flash memory.
SD PWR	Green	Lit	Power is being supplied to the Memory Card.
		Flashing	Flashes once: Simple backup read, write, or verify normal Flashes five times: Simple backup read malfunction Flashes continuously: Simple backup write or verify malfunction
		OFF	Power is not being supplied to the Memory Card.
SD BUSY	Yellow	Flashing	Memory Card is being accessed.
		OFF	Memory Card is not being accessed.

*1 Do not turn OFF the power supply to the PLC while this indicator is lit.

DIP Switch

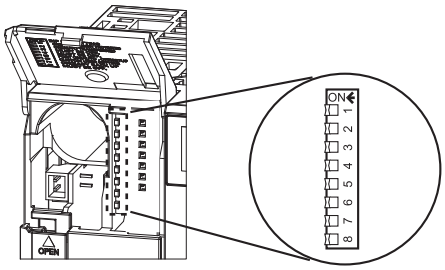

Pin no.	Usage	Setting	Function	Default
SW1	Used to prevent programs from being accidentally overwritten from Programming Devices (including the CX-Programmer).	ON	Writing disabled for user program memory.*1	OFF
		OFF	Writing enabled for user program memory.	
SW2	Set to ON to read the program (AUTOEXEC.OBJ file) and parameter area (AUTOEXEC.STD file) from the Memory Card to the CPU Unit when power is turned ON.*2 Used to store the programs in the Memory Card to switch operations, or to automatically transfer programs at startup (Memory Card ROM operation).*3	ON	The user program is automatically transferred from the Memory Card when power is turned ON.	OFF
		OFF	The user program is not automatically transferred from the Memory Card when power is turned ON.	
SW3	Not used during normal operation.	---	*4	OFF
SW4	Not used during normal operation.	---	*4	OFF
SW5	Set to ON to automatically detect the baud rate of the CX-Programmer (peripheral bus only) when using the serial port (RS-232C).*4	ON	Serial port (RS-232C) communications condition: Automatically detect CX-Programmer (peripheral bus only) baud rate.	OFF
		OFF	Serial port (RS-232C) communications condition: According to CX-Programmer communications settings in PLC Setup. (Refer to *Table 1*.)	
SW6	Set pin 6 to ON or OFF and use A395.12 in the program to create a user-defined condition without using an Input Unit.	ON	User-defined pin. Turns ON the User DIP Switch Pin Flag (A395.12).	OFF
		OFF	User-defined pin. Turns OFF the User DIP Switch Pin Flag (A395.12).	
SW7	Set the simple backup type. (Refer to Table 2 below.)	---	Specifies the simple backup type.	OFF
SW8	Not used during normal operation.	---	*4	OFF

*1 The following data cannot be overwritten when pin 1 is ON:
- All parts of the user program (programs in all tasks)
- All data in the parameter area (such as the PLC Setup and I/O table)
  When pin 1 is ON, the user program and parameter area will not be cleared when the memory clear operation is performed from a Programming Device.

*2 I/O memory files (AUTOEXEC.IOM and ATEXEC□□.IOM) are automatically transferred when power is turned ON if pin 2 is set to ON. Both the program (AUTOEXEC.OBJ) and parameter area (AUTOEXEC.STD) files must be stored on the Memory Card. It is not necessary for the I/O memory files (AUTOEXEC.IOM and ATEXEC□□.IOM) to be stored on the Memory Card.

*3 When pin 7 is ON, simple backup reading from the Memory Card is given priority, so even if pin 2 is ON, the user program is not automatically transferred from the Memory Card when power is turned ON.

*4 Some function assignments are based on combinations of SW3, SW4, and SW8. Refer to *Table 3 Possible operation settings by combination of DIP switches SW3, SW4, and SW8*. During normal operation, set SW3, SW4, and SW8 to OFF.

Table 1 DIP switch settings when serial port is used

Setting / Connection	Pin 5 of DIP switch on front panel	PLC Setup (Serial port (RS-232C))*1
1. Peripheral bus (automatic detection)	ON	---
2. Peripheral bus	OFF (default)	Peripheral bus
3. Host Link	OFF (default)	Host Link (default)
4. NT Link	OFF (default)	NT Link
5. No-protocol	OFF (default)	No-protocol
6. Serial Gateway	OFF (default)	Serial Gateway
7. Serial PLC Link	OFF (default)	Serial PLC Link

*1 Set using the CX-Programmer.

Table 2 DIP switch settings during simple backup

Simple backup type	DIP Switch SW7/SW8	Required operation
Backing up all PLC data on the Memory Card: 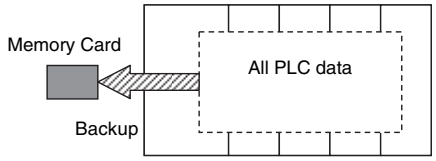	ON/OFF	Press the Memory Card Power Supply Switch for 3 s.
Restoring all PLC data from the Memory Card: 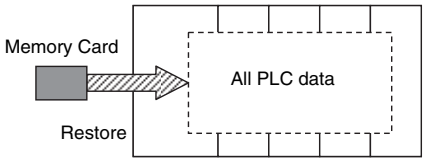		Turn ON the power to the PLC.*1
Comparing the Memory Card and the CPU Unit: 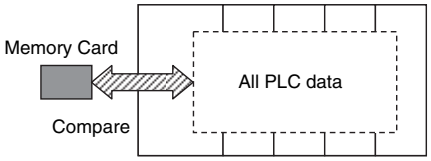	OFF/OFF	Press the Memory Card Power Supply Switch for 3 s.

*1 This operation is given priority over automatic transfer at startup (pin 2 set to ON).

Note After the simple backup operation has been used to restore data from the Memory Card to the PLC, the operation mode will remain in PROGRAM mode and cannot be changed to MONITOR or RUN mode until the PLC power is turned OFF. After restoring the data, turn OFF the power, change the setting of DIP switch pin 7 to OFF, and then turn the power back ON.

Table 3 Possible operation settings by combination of DIP switches SW3, SW4, and SW8

SW3	SW4	SW8	Function
OFF	OFF	OFF	Normal operation
OFF	OFF	ON	Cannot be set
OFF	ON	OFF	Cannot be set
OFF	ON	ON	The following functions are enabled by this setting. • Operation Log Clear • Extended FINS Write Access Log Clear
ON	OFF	OFF	Cannot be set
ON	OFF	ON	Cannot be set
ON	ON	OFF	Cannot be set
ON	ON	ON	Cannot be set

Battery

A battery is not pre-installed at the time of shipment from the factory.

A battery is required to retain the time data when the CPU Unit is left without power supplied for an extended period of time.

● Purpose of Battery Installation

A battery is used to retain the time data when the CPU Unit is left without power supplied. Even without a battery installed, the time data is retained by a built-in capacitor but the retention time is dependent on the continuous powered-on time of the CPU Unit as shown below.

Continuous powered-on time of CPU Unit*1	Retention time without power at ambient temperature of 40°C
100h	Approx. 10 days
8h	Approx. 8 days
1h	Approx. 7 days

*1 This corresponds to the charging time of the built-in capacitor from a state where no charge is stored.

If time data is used in the program and the continuous powered-on time above cannot be ensured or if the period without power exceeds the period above, use a battery.

The following data, which is data other than time data, will not be lost due to discharge of the battery or built-in capacitor because it is retained in the built-in non-volatile memory.

- DM Area (D)
- Expanded Data Memory (E)
- Holding Area (H)
- Counter (C)
- Auxiliary Area (A)

For details on battery installation, refer to 📖 7-2 Replacing the Battery.

Battery Model

The battery model and specifications are as follows.

Model	Appearance	Function
CJ1W-BAT01	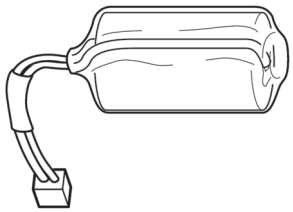	Maximum lifetime: 5 years Battery life: Refer to *Battery Service Life and Replacement Period* on page 5. Retains the clock information when power is not supplied.

Setting Detection of Battery-Related Errors

If a battery is installed, change the CPU Unit settings to enable the detection of battery errors.

Refer to *9-3-2 CPU Unit Settings* in the *CJ2/CJ3 CPU Unit Software User's Manual* (Cat. No. W473).

3-1-2 Built-in EtherNet/IP Section

This section describes the components related to the EtherNet/IP port section that is built into the CJ3M-CPU3□.

Additional Information

Set the unit number and node address with the rotary switches on the front panel of the CPU Unit, and set the communications parameters with the *Edit Parameters* menu command for the Special I/O Unit. For details on the *Edit Parameters*, refer to *8-2 Setting CPU Bus Units and Special I/O Units* in the *CJ2/CJ3 CPU Unit Software User's Manual* (Cat. No. W473). For details on specifications and settings for the built-in EtherNet/IP port, refer to the *CS/CJ Series EtherNet/IP Units Operation Manual* (Cat. No. W465).

Nomenclature and Functions

CJ3M-CPU3□

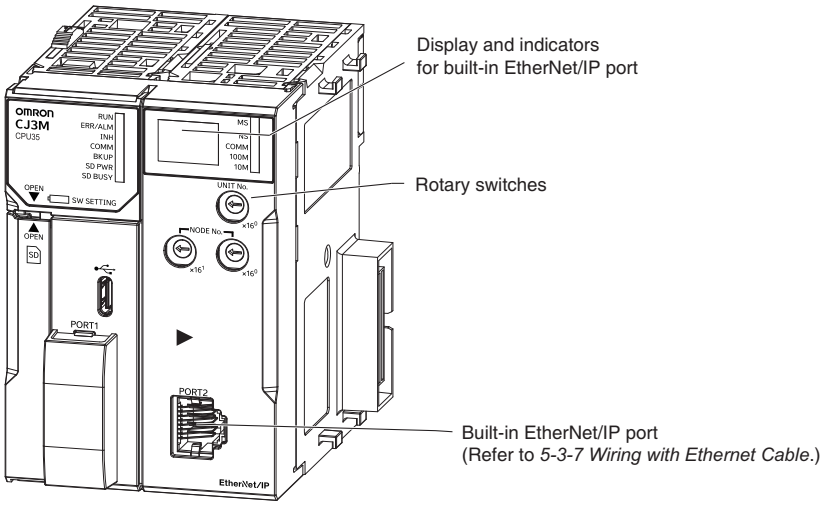

1. Built-in EtherNet/IP Port Status Indicator
   The following statuses of EtherNet/IP are indicated.
   - EtherNet/IP port status
   - Network status
   - Ethernet communication status
   - IP address of built-in EtherNet/IP port and error code when error occurs
2. Rotary switches
   The following settings can be configured.
   - Unit number of built-in EtherNet/IP
   - FINS node address of EtherNet/IP port
3. Built-in EtherNet/IP port
   Connect an Ethernet cable.

Built-in EtherNet/IP Port Status Indicator

Ethernet node status and Ethernet network status can be monitored by checking the display and indicators at the upper right of the front of the CPU Unit.

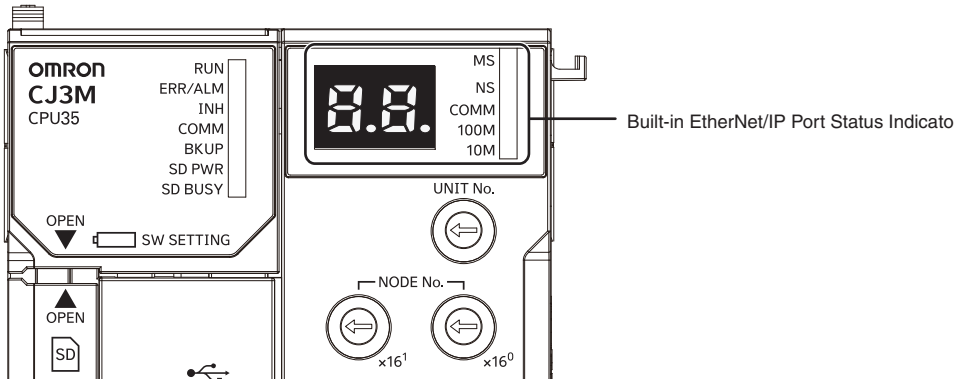

● Status Indicators: MS, NS, COMM, 100M, and 10M

The MS (Module Status) indicator indicates the status of the built-in EtherNet/IP port itself and the NS (Network Status) indicator indicates the status of the network.

The COMM, 100M, and 10M indicators indicate the status of Ethernet communications.

The MS and NS indicators can be green or red. The COMM, 100M, and 10M indicators are yellow. These indicators can be lit, flashing, or not lit. The following table shows the meaning of these indicator conditions.

Refer to *SECTION 6 Troubleshooting* for details on using these indicators for troubleshooting.

Indicator	Name	Color	Status	Meaning
MS	Module Status	Red	Lit	Fatal error
			Flashing	Recoverable error
		Green	Lit	Normal
		---	Not lit	Power supply OFF
NS	Network Status	Red	Lit	Fatal error
			Flashing	Recoverable error
		Green	Lit	Tag data link and message connections established
			Flashing	Tag data link and message connections not established
		---	Not lit	Offline or power supply OFF
COMM	Communication	Yellow	Lit	Transferring data
			Not lit	Not transferring data
100M	100 Mbps	Yellow	Lit	100Base-TX link established
			Not lit	100Base-TX link not established
10M	10 Mbps	Yellow	Lit	10Base-TX link established
			Not lit	10Base-TX link not established

Seven-segment Display

When the power supply to the PLC is turned ON or the CPU Unit is reset, all of the segments will flash twice, and then the IP address set for the built-in EtherNet/IP port will be displayed on the 7-segment display from right to left. After the entire IP address is displayed, the lower 8 bits of the IP address (node address) will be displayed in hexadecimal.

For example, the display will change as follows if the IP address is 192.168.250.10:

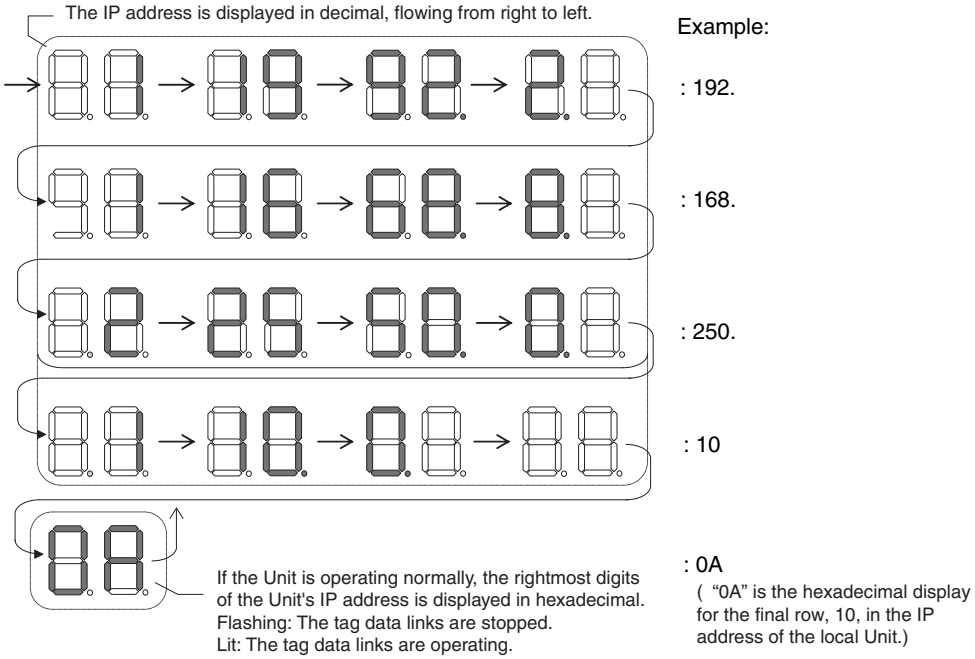

If an error occurs, the error code will be displayed alternately with the rightmost byte of the affected device's IP address. For details on error codes, refer to *6-2-2 Checking Error Status at the EtherNet/IP Port Seven-segment Display*.

The following examples show the displays for errors.

- A d6 error (failure to connect) has occurred in communications with IP address 192.168.250.8.
- A d6 error (failure to connect) has occurred in communications with IP address 192.168.250.9.
- A d5 error (verification error; target missing) has occurred in communications with IP address 192.168.250.40.
- A C6 error (multiple switches ON) and an EA error (EtherNet/IP expansion setting error) have occurred at the built-in EtherNet/IP port (192.168.250.10).

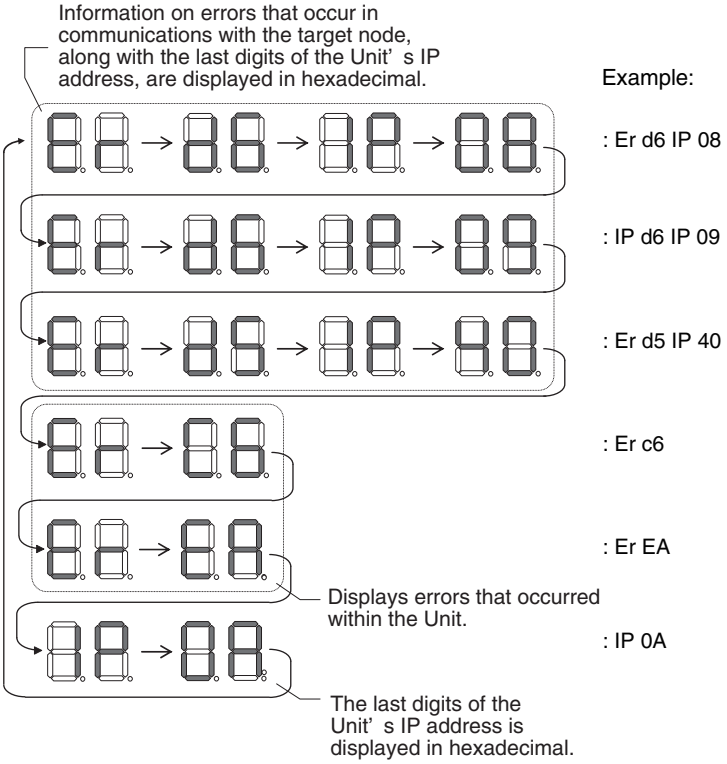

- There is no priority to the order in which the errors are displayed. All of the errors are displayed repeatedly in sequence.

Left/Right Dot LEDs

If an error occurs at multiple devices for which the rightmost 8 bits in the IP addresses are the same, this is indicated by the dots on the right side in display on the target devices.

The following examples show the displays for multiple errors.

- d6 errors (failure to connect) have occurred in communications with IP address 10.0.1.8.
- d6 errors (failure to connect) have occurred in communications with IP address 10.0.2.8.

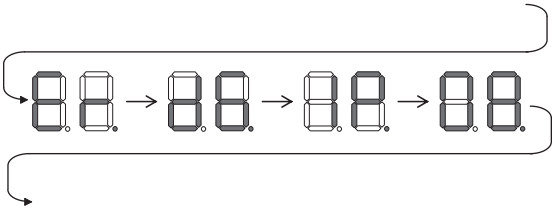

Rotary Switches

The unit number and node address for built-in EtherNet/IP port are set using the rotary switches. The unit number and node address are allocated in the same way as for a CPU Bus Unit. According to the unit number that is set, words are automatically allocated in the CIO Area and DM Area. For details, refer to the *Section 4 CJ2/CJ3 CPU Unit Software User's Manual* (W473).

● Setting the Unit Number

Set a unique unit number for the CPU Unit built-in EtherNet/IP port. The same unit number cannot be used by any other CPU Bus Unit connected to the CPU Unit.

Use a small screwdriver to make the setting, and be sure not to damage the rotary switch. The unit number is factory-set to 0.

Setting range
0 to F

Precautions for Correct Use

- Always turn OFF the PLC's power supply before setting the unit number.
- When setting the unit number for the first time or when changing the setting, create the PLC's I/O tables.

Node Address Setting Switches

Set a FINS address for the built-in EtherNet/IP port. With the FINS communications service, multiple EtherNet/IP Units (including the Unit built-in EtherNet/IP port) connected by Ethernet are identified by their node addresses. Using the node address switches, set a unique node address in hexadecimal. The same node address cannot be used by any other EtherNet/IP Unit or Ethernet Unit connected on the same Ethernet network.

As long as it does not duplicate any other address, the node address can be set from 01 to FE (1 to 254 in decimal).

Setting range
01 to FE hex (1 to 254 decimal)

Note The node address is factory-set to 01. With the default setting, the values set on these switches become the last two digits of the built-in EtherNet/IP port's IP address.
The default IP address is 192.168.250.*node_address.* With the factory-set node address of 01, the default IP address is 192.168.250.1.

The node address can be set to any number in the setting range (01 to FE), as long as the same address is not set on another node in the network.

Precautions for Correct Use

- Always turn OFF the PLC's power supply before setting the unit number.
- When setting the unit number for the first time or when changing the setting, create the PLC's I/O tables.

Additional Information

- If the node address setting is changed during operation, the MS Indicator will flash red.

Relationship with IP Address

When using the automatic generation method (dynamic/static) for IP address conversion, the rightmost byte of the IP address that is set for the built-in EtherNet/IP port must be set to the same value as the node address. If it cannot be set to the same value as the node address, then the address conversion method must be set to the IP address table method or the IP address + automatic generation method. For details, refer to *Section 5-2 IP Addresses in FINS Communications* in the *CS/CJ Series EtherNet/IP Units Operation Manual* (W465).

3-2 Memory Card

Use the following OMRON-specified SD Memory Card. Operation may not be correct if SD Memory Card from other companies are used.

3-2-1 Models and Specifications

Model number		HMC-SD1A2/SD1A3	HMC-SD492/SD493	HMC-SD292/SD293
Memory Card capacity		16 Gbytes	4 Gbytes	2 Gbytes
Common specifications	**Dimensions**	32 x 24 x 2.1 mm (W x H x T)		
	Weight	2 g max.		
	Current consumption	Included in the power consumption of the CPU Unit		
	Environmental specifications	Included in the power consumption of the CPU Unit (*1-3-1 General Specifications*		
	No. of writes (per 1 block)	100,000 (guaranteed value)		50,000 (guaranteed value)
Factory specifications	**File system**	FAT32		FAT16

For details on operating procedures, refer to CJ-series CJ2/CJ3 CPU Unit Software User's Manual (Cat. No. W473) Section 7 File Operations.

3-2-2 Operating Procedures

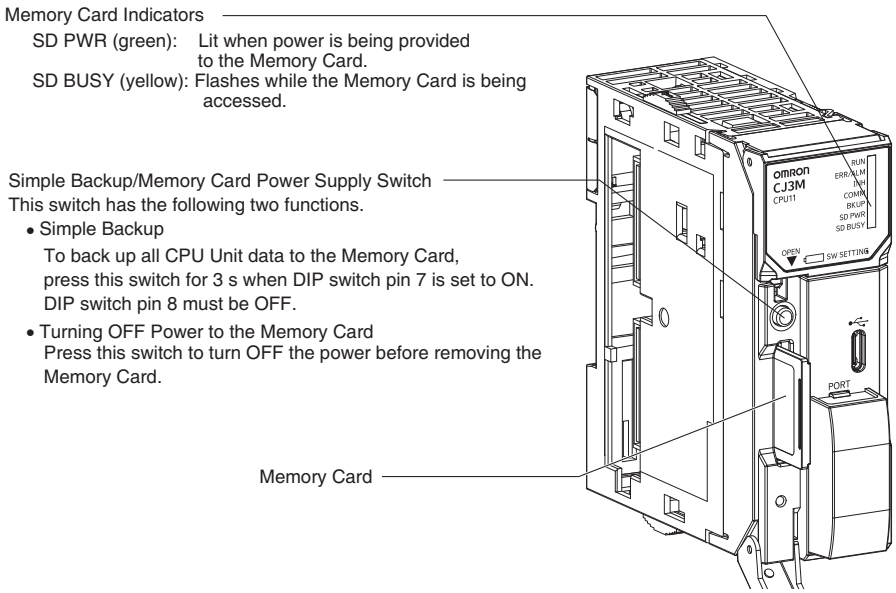

Additional Information

Simple Backup
The simple backup function copies all CPU Unit data (user program, parameters, and I/O memory) to a Memory Card, without having to use a Programming Device.

For details, refer to *8-3 Simple Backup*.

3-2-3 Installing and Removing

Before Using a Memory Card

- Observe the following precautions while the Memory Card is being accessed. The Memory Card may become unusable if these precautions are not followed.
  - Never turn OFF the PLC while the CPU is accessing the Memory Card.
  - Never remove the Memory Card while the CPU is accessing the Memory Card. Press the Memory Card power supply switch and wait for the SD BUSY indicator to go OFF before removing the Memory Card.
- Never insert the Memory Card facing the wrong way. If the Memory Card is inserted forcibly, it may become unusable.
- To delete all the data on the Memory Card by formatting the Memory Card, perform the operation from the CX-Programmer or the PC.

Installing the Memory Card

1 Pull the top end of the Memory Card cover forward and remove from the Unit.

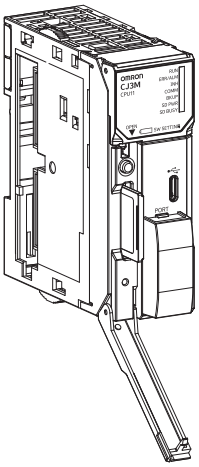

2 Insert the Memory Card with the label facing to the left and push in as far as possible.

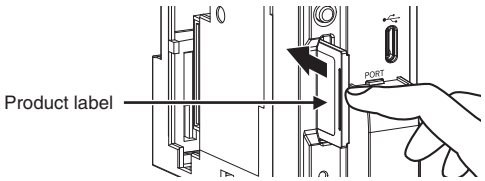

Removing the Memory Card

1 Press the Memory Card power supply switch.

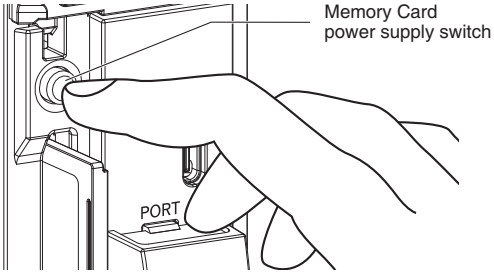

2 Press the Memory Card after the Memory Card Access (BUSY) indicator and Memory Card Power (SD PWR) indicator are no longer lit.

The Memory Card will be ejected from the compartment.

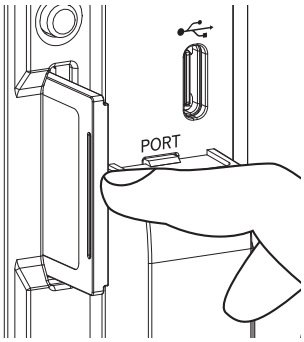

3 Pull out the Memory Card.

4 Install the Memory Card cover.

3-3 Pulse I/O Modules

3-3-1 Models and Specifications

Model	Type of transistor outputs	Specifications
CJ2M-MD211	Sinking outputs	1 MIL connector • 10 inputs (four interrupt/quick-response inputs or two high-speed counter inputs) • 6 outputs (two pulse outputs or two PWM outputs)
CJ2M-MD212	Sourcing outputs	

Note Connectors are not provided with Pulse I/O Modules.
Purchase the following Connector, an OMRON Cable with Connectors for Connector-Terminal Block Conversion Units, or an OMRON Cable with Connectors for Servo Relay Units.

Name	Model	Specifications
MIL Flat Cable Connector for Pulse I/O Modules	XG4M-4030-T	40-pin MIL connector, pressure-welded type (This connector is used by user to make a cable.)

(Refer to the *2-1-2 CPU Rack*, *5-3 Wiring*, or *Section 3-2 Wiring* in the *CJ2M/CJ3M CPU Unit Pulse I/O Module User's Manual* (Cat. No. W486) for details.)

3-3-2 Part Names and Functions

Part Names

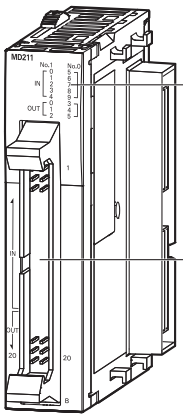

Connecting Pulse I/O Modules to the CPU Unit

Up to two Pulse I/O Modules can be connected to a CJ3M CPU Unit.
They must be connected immediately to the left of the CPU Unit.
The Pulse I/O Module closest to the CPU Unit is Pulse I/O Module 0 and the other one is Pulse I/O Module 1.

One Pulse I/O Module	Two Pulse I/O Modules
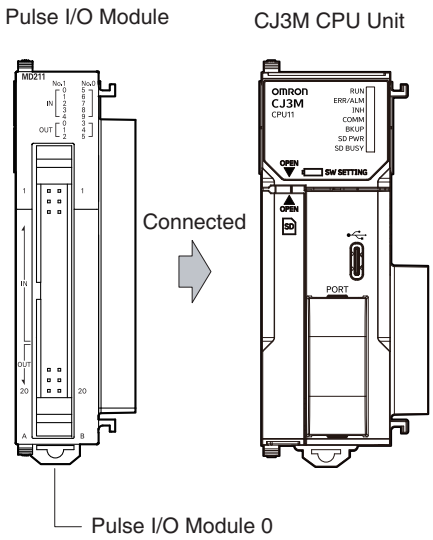	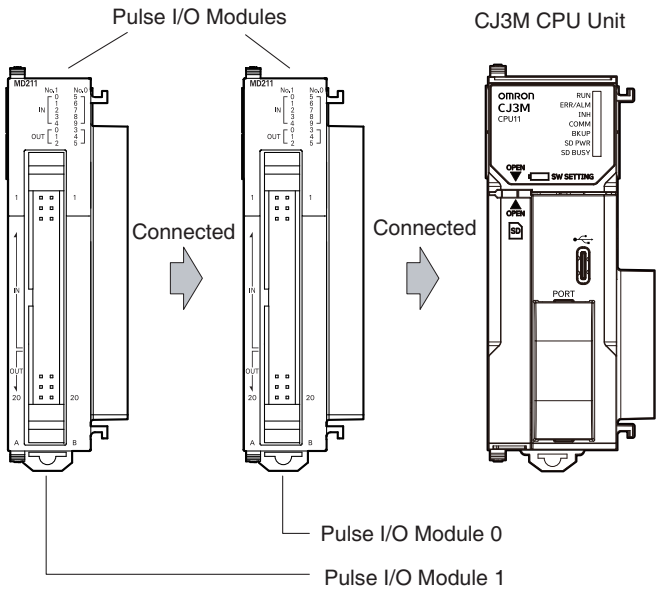

Pulse I/O Module Detection

The CPU Unit will automatically detect the Pulse I/O Modules that are connected when the power supply is turned ON. The Pulse I/O Modules are therefore not registered in the I/O tables.

An error will not occur when power is turned ON even if there is a different number of Pulse I/O Modules connected or different models of Pulse I/O Modules connected.

Pulse I/O Module Status Indicators

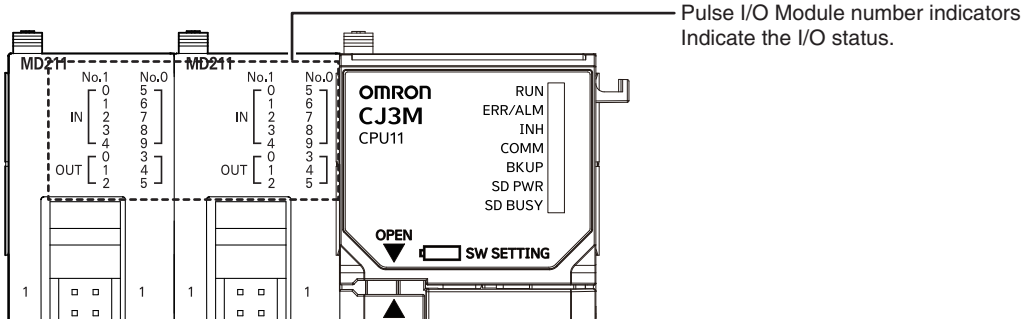

Up to two Pulse I/O Modules can be connected.
The indicators on the front panel of a Pulse I/O Module indicate whether the Block is number 0 or number 1 and indicate the I/O status.
The following table describes these indicators.

❍: Lit, ● :Not lit

Indicator	Color	Status	Meaning
No. 0	Green	❍	This is the Pulse I/O Module that is connected directly to the CPU Unit. It is Pulse I/O Module number 0.
		●	Not connected.
No. 1	Green	❍	This is the Pulse I/O Module that is connected next to the Power Supply Unit when two Pulse I/O Modules are connected. It is Pulse I/O Module number 1.
		●	Not connected.
IN0 to IN9	Yellow	❍	The allocated input is ON.
		●	The allocated input is OFF.
OUT0 to OUT5	Yellow	❍	The allocated output is ON.
		●	The allocated output is OFF.

Precautions for Correct Use

A maximum of two Pulse I/O Modules can be connected. Do not connect more than this. If three or more Pulse I/O Modules are connected, a too many I/O points error (fatal error) will occur. If this error occurs, turn OFF the power supply to the PLC and remove all but two Pulse I/O Modules.

3-4 Power Supply Units

3-4-1 Models and Specifications

Item	Specifications				
Power Supply Unit	CJ1W-PA205R	CJ1W-PA205C	CJ1W-PA202	CJ1W-PD025	CJ1W-PD022
Supply voltage	100 to 240 VAC (wide-range), 50/60 Hz			24 VDC	
Operating voltage and frequency ranges	85 to 264 VAC, 47 to 63 Hz			19.2 to 28.8 VDC	21.6 to 26.4 VDC
Power consumption	100 VA max.		50 VA max.	50 W max.	35 W max.
Inrush current*1	At 100 to 120 VAC: 15 A/8 ms max. for cold start at room temperature At 200 to 240 VAC: 30 A/8 ms max. for cold start at room temperature		At 100 to 120 VAC: 20 A/8 ms max. for cold start at room temperature At 200 to 240 VAC: 40 A/8 ms max. for cold start at room temperature	At 24 VDC: 30 A/20 ms max. for cold start at room temperature	
Output capacity*7	5.0 A, 5 VDC (including supply to CPU Unit)		2.8 A, 5 VDC (including supply to CPU Unit)	5.0 A, 5 VDC (including supply to CPU Unit)	2.0 A, 5 VDC (including supply to CPU Unit)
	0.8 A, 24 VDC		0.4 A, 24 VDC	0.8 A, 24 VDC	0.4 A, 24 VDC
	Total: 25 W max.		Total: 14 W max.	Total: 25 W max.	Total: 19.6 W max.
Output terminal (service supply)	Not provided				
RUN output*2	Contact configuration: SPST-NO Switch capacity: 250 VAC, 2 A (resistive load) 120 VAC, 0.5 A (inductive load), 24 VDC, 2A (resistive load) 24 VDC, 2 A (inductive load)	Not provided.	Not provided.	Not provided.	Not provided.
Replacement notification function	Not provided.	With Alarm output (open collector output) 30 VDC max., 50 mA max.	Not provided.	Not provided.	Not provided.

Item	Specifications				
Insulation resistance	20 MΩ min. (at 500 VDC) between AC external and GR terminals*3	• 20 MΩ min. (at 500 VDC) between all external terminals and GR terminal*3, and between all alarm output terminals. • 20 MΩ min. (at 250 VDC) between all alarm output terminals and GR terminal*3.	20 MΩ min. (at 500 VDC) between AC external and GR terminals*3	20 MΩ min. (at 500 VDC) between DC external and GR terminals*3	---*6
Dielectric strength*4	2,300 VAC 50/60 Hz for 1 min between AC external and GR terminals*3 Leakage current: 10 mA max.	• 2,300 VAC, 50/60 Hz for 1 min between all external terminals and GR terminal*3 and between all alarm output terminals with a leakage current of 10 mA max. • 1,000 VAC, 50/60 Hz for 1 min between all alarm output terminals and GR terminal*3 with a leakage current of 10 mA max.	2,300 VAC 50/60 Hz for 1 min between AC external and GR terminals*3 Leakage current: 10 mA max.	1,000 VAC 50/60 Hz for 1 min between DC external and GR terminals*3 Leakage current: 10 mA max.	---*6
	1,000 VAC 50/60 Hz for 1 min between DC external and GR terminals*3 Leakage current: 10 mA max.				
Noise immunity	2 kV on power supply line (Conforms to IEC61000-4-4.)				
Vibration resistance	5 to 8.4 Hz, 3.5-mm amplitude, 8.4 to 150 Hz, acceleration: 10 m/s^2 in X, Y, and Z directions for 100 minutes (Time coefficient: 10 minutes × coefficient factor 10 = total time 100 min.) (according to IEC60068-2-6)				
Shock resistance	150 m/s^2 3 times each in X, Y, and Z directions (Relay Output Unit: 100 m/s^2) (according to IEC60068-2-27)				
Ambient operating temperature	0 to 55°C				
Ambient operating humidity	10% to 90% (with no condensation)	10% to 90% (with no condensation)*5	10% to 90% (with no condensation)		
Atmosphere	Must be free from corrosive gases.				
Ambient storage temperature	–20 to 75°C	–20 to 75°C*5	–20 to 75°C		

*1 The AC and DC values above are given for a cold start, and the AC values are at room temperature. The AC inrush control circuit uses a thermistor element with a low-temperature current control characteristic. If the ambient temperature is high or the PLC is hot-started, the thermistor will not be sufficiently cool, and the inrush current given in the table may be exceeded by up to twice the given value. When selecting fuses or breakers for external circuits, allow sufficient margin in shut-off performance. The DC inrush control circuit uses a capacitor-charging delay circuit. If the power is OFF for only a short time for a hot-start, the capacitor will not sufficiently charge and the inrush current given in the table may be exceeded by up to twice the given value.

*2 Supported only when mounted to CPU Rack.

*3 Disconnect the Power Supply Unit's LG terminal from the GR terminal when testing insulation and dielectric strength. Testing the insulation and dielectric strength with the LG terminal and the GR terminals connected will damage internal circuits in the CPU Unit.

*4 Change the applied voltage gradually using the adjuster on the Tester. If the full dielectric strength voltage is applied or turned OFF using the switch on the Tester, the generated impulse voltage may damage the Power Supply Unit.

*5 Maintain an ambient storage temperature of –25 to 30°C and relative humidity of 25% to 70% when storing the Unit for longer than 3 months to keep the replacement notification function in optimum working condition.

*6 CJ1W-PD022 is not insulated between the primary DC power and secondary DC power.

*7 Internal components in the Power Supply Unit will deteriorate or be damaged if the Power Supply Unit is used for an extended period of time exceeding the power supply output capacity or if the outputs are shorted.

3-4-2 Components

● Example: CJ1W-PA205R

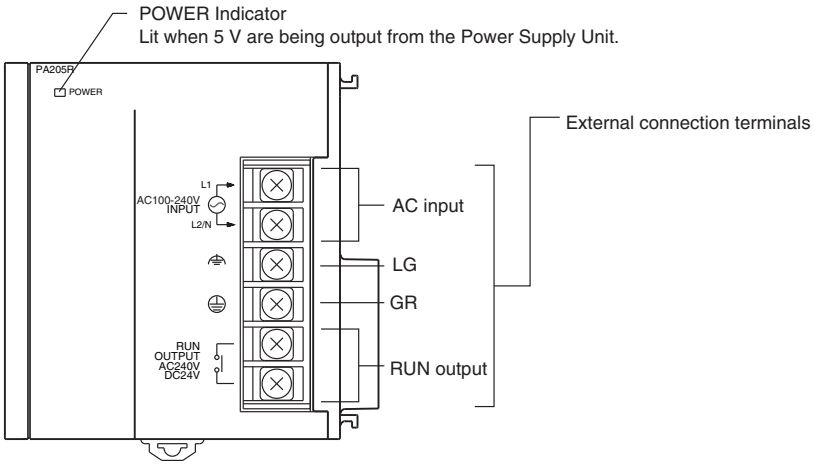

● Example: CJ1W-PA205C

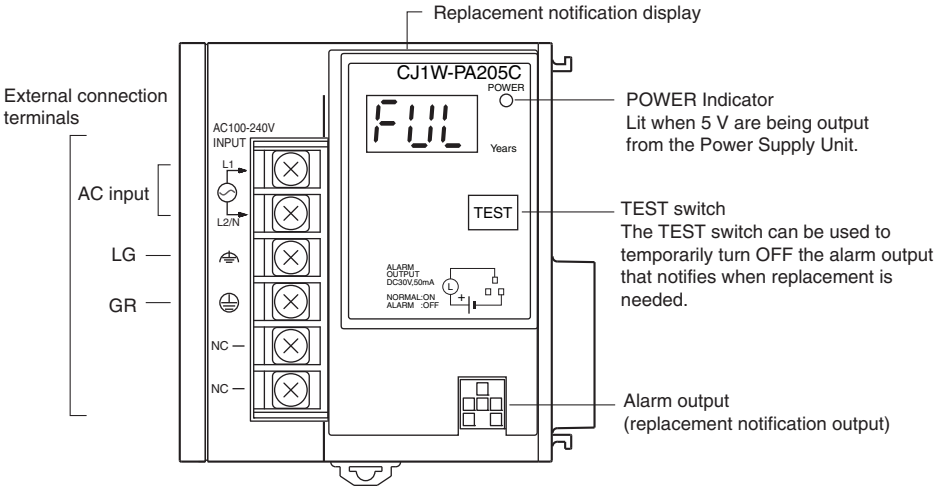

● Example: CJ1W-PA202

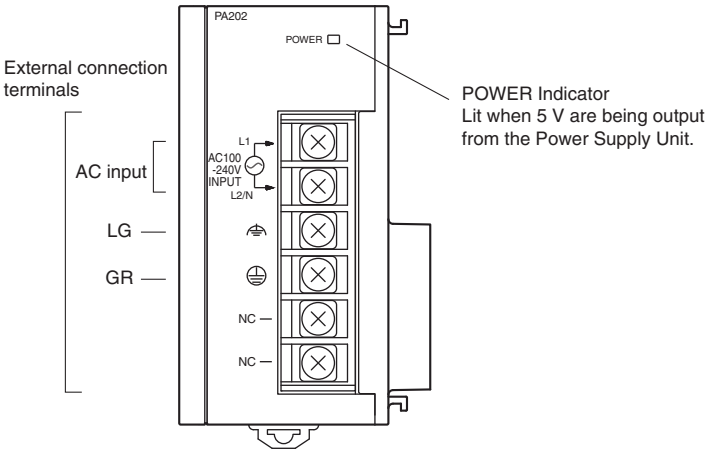

- **Example: CJ1W-PD025**

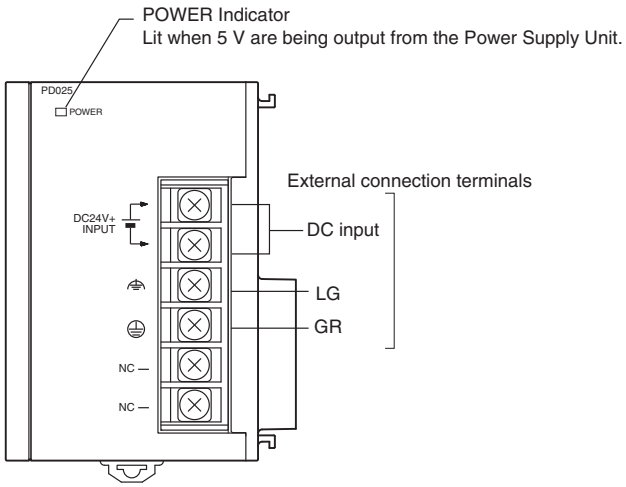

- **Example: CJ1W-PD022**

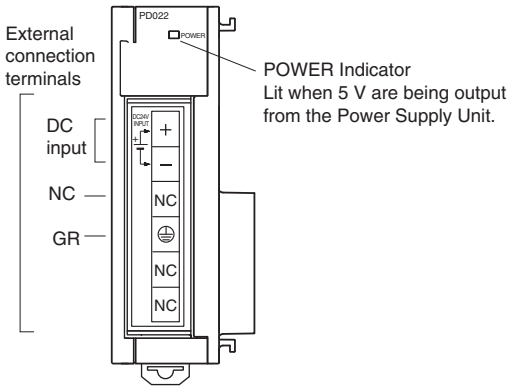

AC Input

Supply 100 to 240 VAC (allowable: 85 to 264 VAC).

Note The CJ1W-PA205R, CJ1W-PA205C, and CJ1W-PA202 have a wide input range, so they do not have voltage switching terminals.

DC Input

Supply 24 VDC.

Model	Allowable power supply voltage fluctuation range
CJ1W-PD025	19.2 to 28.8 VDC (±20%)
CJ1W-PD022	21.6 to 26.4 VDC (±10%)

LG

Ground to a resistance of 100 Ω or less to increase noise resistance and avoid electric shock.

GR

Ground to a resistance of 100 Ω or less to avoid electric shock.

RUN Output (CJ1W-PA205R Only)

The internal contact turns ON when the CPU Unit is operating (RUN or MONITOR mode). The Power Supply Unit must be in the CPU Rack to use this output.

Alarm Output (CJ1W-PA205C Only)

The alarm output is used to notify when Power Supply Unit replacement is required. The output is normally ON. The output turns OFF when the time until replacement is 6 months or less.

3-4-3 Selecting a Power Supply Unit

After determining what power supply voltage is required, whether power output terminals and a RUN output are required, and whether replacement notification is required, calculate the current and power requirements for each Rack.

Condition 1: Current Requirements

There are two voltage groups for internal power consumption: 5 VDC and 24 VDC.

For details on the current consumption of individual Units, refer to *2-1-4 Configuration Units*.

● Current Consumption at 5 VDC

The following table shows the current that can be supplied to Units (including the CPU Unit) that use 5-VDC power.

Model	Maximum current at 5 VDC
CJ1W-PA205R/205C	5.0 A
CJ1W-PA202	2.8 A
CJ1W-PD025	5.0 A
CJ1W-PD022	2.0 A

● Current Consumption at 24 VDC

The following table shows the current that can be supplied to Units that use 24-VDC power supply.

Model	Maximum current at 24 VDC
CJ1W-PA205R/205C	0.8 A
CJ1W-PA202	0.4 A
CJ1W-PD025	0.8 A
CJ1W-PD022	0.4 A

Condition 2: Power Requirements

The following table shows the maximum total power that can be supplied at 5 VDC and 24 VDC.

Model	Maximum total power output
CJ1W-PA205R/205C	25 W
CJ1W-PA202	14 W
CJ1W-PD025	25 W
CJ1W-PD022	19.6 W

For details on the current consumption of individual Units, refer to *2-1-2 CPU Rack*, *2-1-3 Expansion Racks*, and *2-1-4 Configuration Units*. Refer to *2-1-5 Calculating Unit Current Consumption* for an example of calculating the current consumption.

3-5 CJ-series Basic I/O Units

3-5-1 Basic I/O Units with Terminal Blocks

Part Names and Functions

- **Eight/sixteen-point Units (18-point Terminal Blocks)**

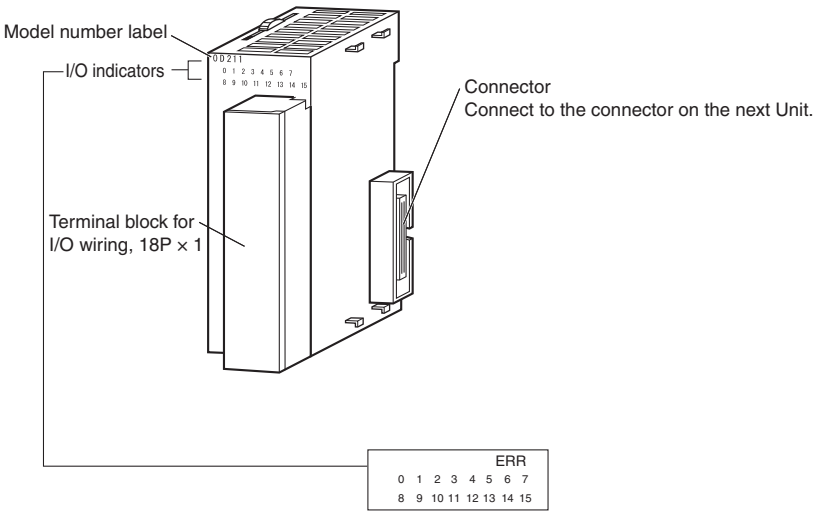

Note The CJ1W-OD202, CJ1W-OD204, CJ1W-OD232, and CJ1W-MD232 also have an ERR indicator for the load short-circuit alarm.

Interrupt Input Units

- **Functions**

Interrupt Input Units are used to execute interrupt programs on the rising or falling edge of an input signal. When the specified interrupt input turns ON (or OFF), execution of the cyclic program in the CPU Unit is interrupted and an I/O interrupt task (task number 100 to 131) is executed. When execution of the I/O interrupt task has been completed, the cyclic program is again executed starting from the instruction after which it was interrupted.

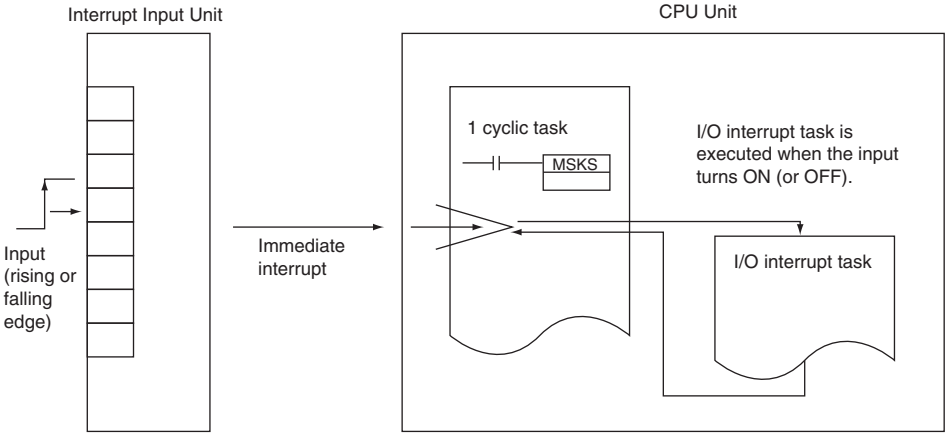

Application Precautions

- Interrupt Input Units must be mounted in the locations described below.

  All Interrupt Input Units must be connected in any of the five positions immediately to the right of the CPU Unit, i.e., slots 0 to 4 on the CPU Rack. If an Interrupt Input Unit is connected in any other position on the CPU Rack or anywhere on an Expansion Rack, and I/O setting error (fatal) will occur.

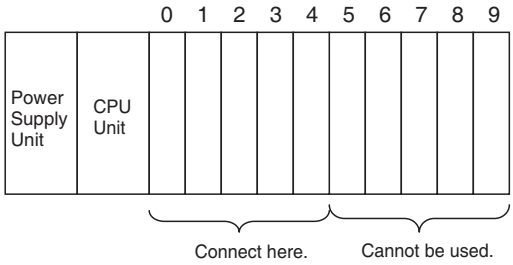

- The Interrupt Input Units must be connected in the slot ranges specified above even when the I/O tables are edited using the CX-Programmer. If the Interrupt Input Units are not connected in the correct positions, an error will occur when the I/O tables are generated from the CX-Programmer. A401.10 will turn ON to indicate an I/O setting error and A405.08 will turn ON to indicate that an Interrupt Input Unit is in the wrong position.

Note Even if a Unit is physically in one of the correct positions, a Dummy Unit can be registered in the I/O tables, causing a Unit to be defined in a position different from its physical position.

- Up to two Interrupt Input Units can be mounted. If these limits are exceeded, a too many I/O points error (fatal error) will occur.
- The input response time cannot be changed for the CJ1W-INT01, and the related portions of the Basic I/O Unit input time constants in the PLC Setup, and the setting status in A220 to A259 will not be valid.

Input Signal Width

Input signals must meet the following conditions.

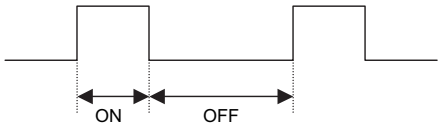

Unit	ON time	OFF time
CJ1W-INT01	0.05 ms min.	0.5 ms min.

3-5-2 Thirty-two/Sixty-four-point Basic I/O Units with Connectors

Units are available with either Fujitsu/OTAX connectors (CJ1W-□D□□1) or MIL connectors (CJ1W-□D□□2/3/4).

Part Names

- **Thirty-two-point Units (Models with 40-point Fujitsu/OTAX Connector or MIL Connector)**

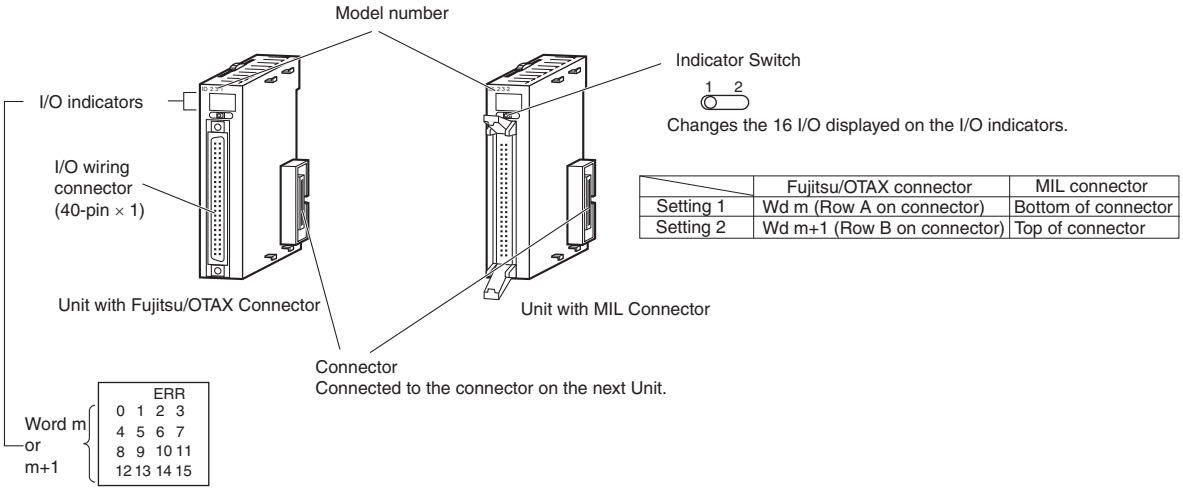

	Fujitsu/OTAX connector	MIL connector
Setting 1	Wd m (Row A on connector)	Bottom of connector
Setting 2	Wd m+1 (Row B on connector)	Top of connector

Note: Only the CJ1W-OD232 has an ERR indicator for the load short-circuit alarm.

- **Thirty-two-point Units (Models with 2 × 24-pin Fujitsu/OTAX Connectors or 2 × 20-pin MIL Connectors)**

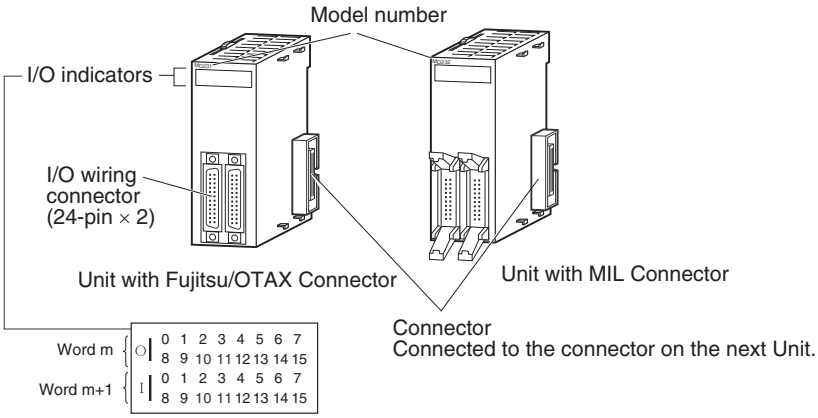

● Sixty-four-point Units (Models with 2 × 40-point Fujitsu/OTAX Connectors or MIL Connector)

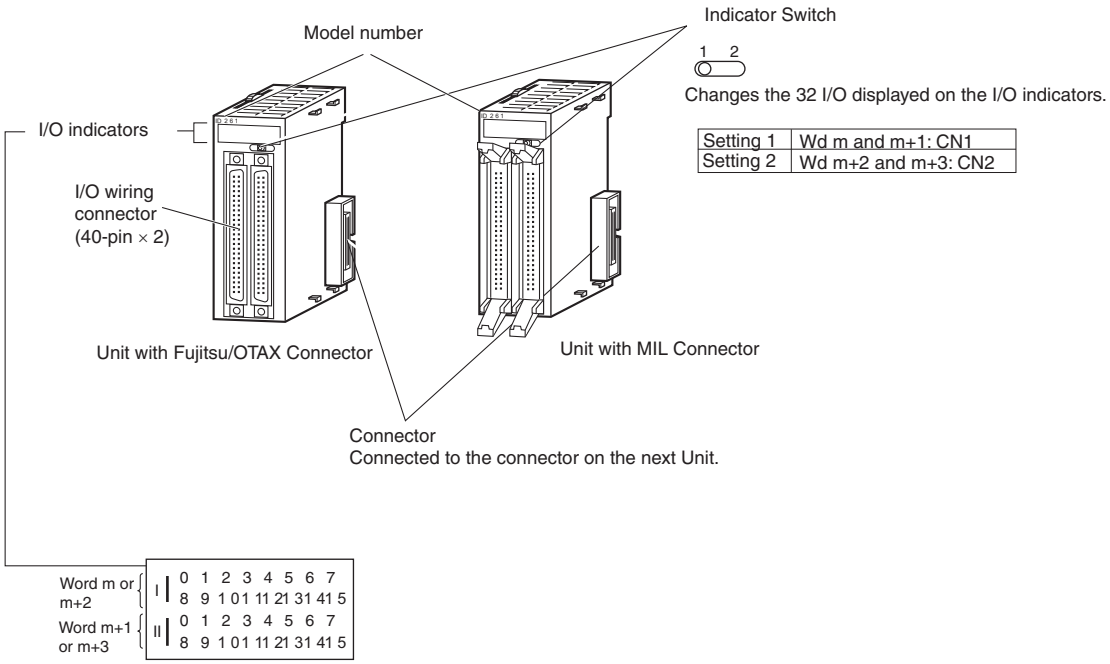

3-6 I/O Control Units and I/O Interface Units

An I/O Control Unit and I/O Interface Units are used to connect Expansion Racks to expand the system.

3-6-1 Component Names

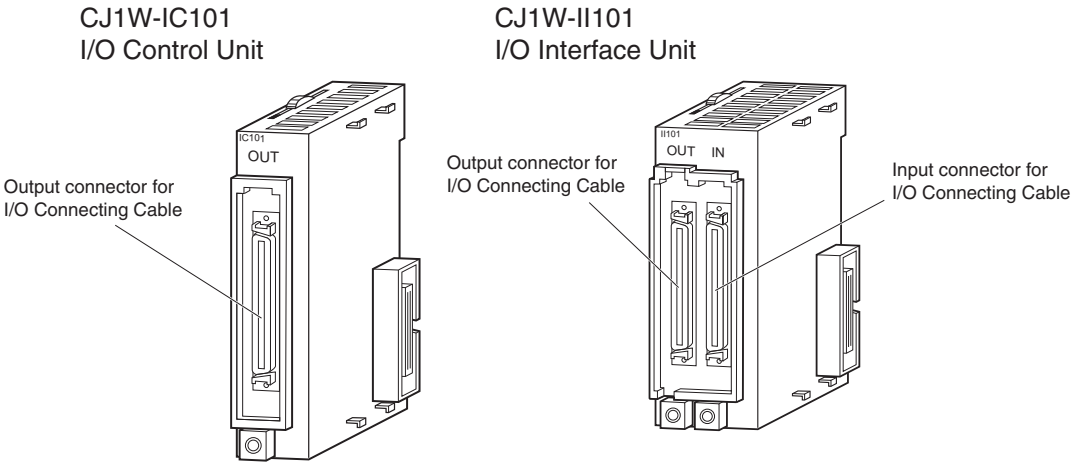

Precautions for Correct Use

Attached the enclosed cover to the I/O Connecting Cable connector on the I/O Interface Unit when it is not being used to protect it from dust.

3-6-2 System Configuration

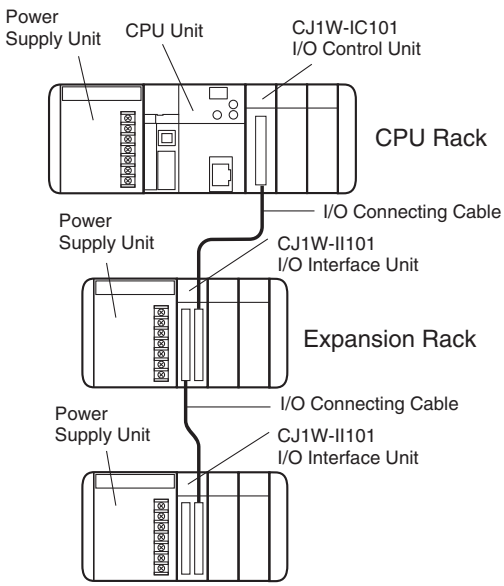

The I/O Control Unit is connected directly to the CPU Unit. If it is not immediately to the right of the CPU Unit, correct operation may not be possible.

The I/O Interface Unit is connected directly to the Power Supply Unit. If it is not immediately to the right of the Power Supply Unit, correct operation may not be possible.

4

Support Software

This section describes the software that is used to program and debug a CJ3 PLC. It also describes how to connect the Programming Device and the PLC.

4-1 Support Software 4-2
4-1-1 CX-One FA Integrated Tool Package 4-2
4-2 Connection Methods 4-6
4-2-1 Connecting by USB 4-6
4-2-2 Connecting by RS-232C 4-8
4-2-3 Connecting to Ethernet 4-10

4-1 Support Software

"Support Software" refers to software applications for programming and debugging OMRON Programmable Controllers.

4-1-1 CX-One FA Integrated Tool Package

The CX-One provides an integrated package of Support Software for OMRON PLCs and components. It consists of software applications for PLC programming, network settings, touch-panel screen creation, servo control, inverters, temperature control, and other functions.

CX-One Integrated Tool Package Contents

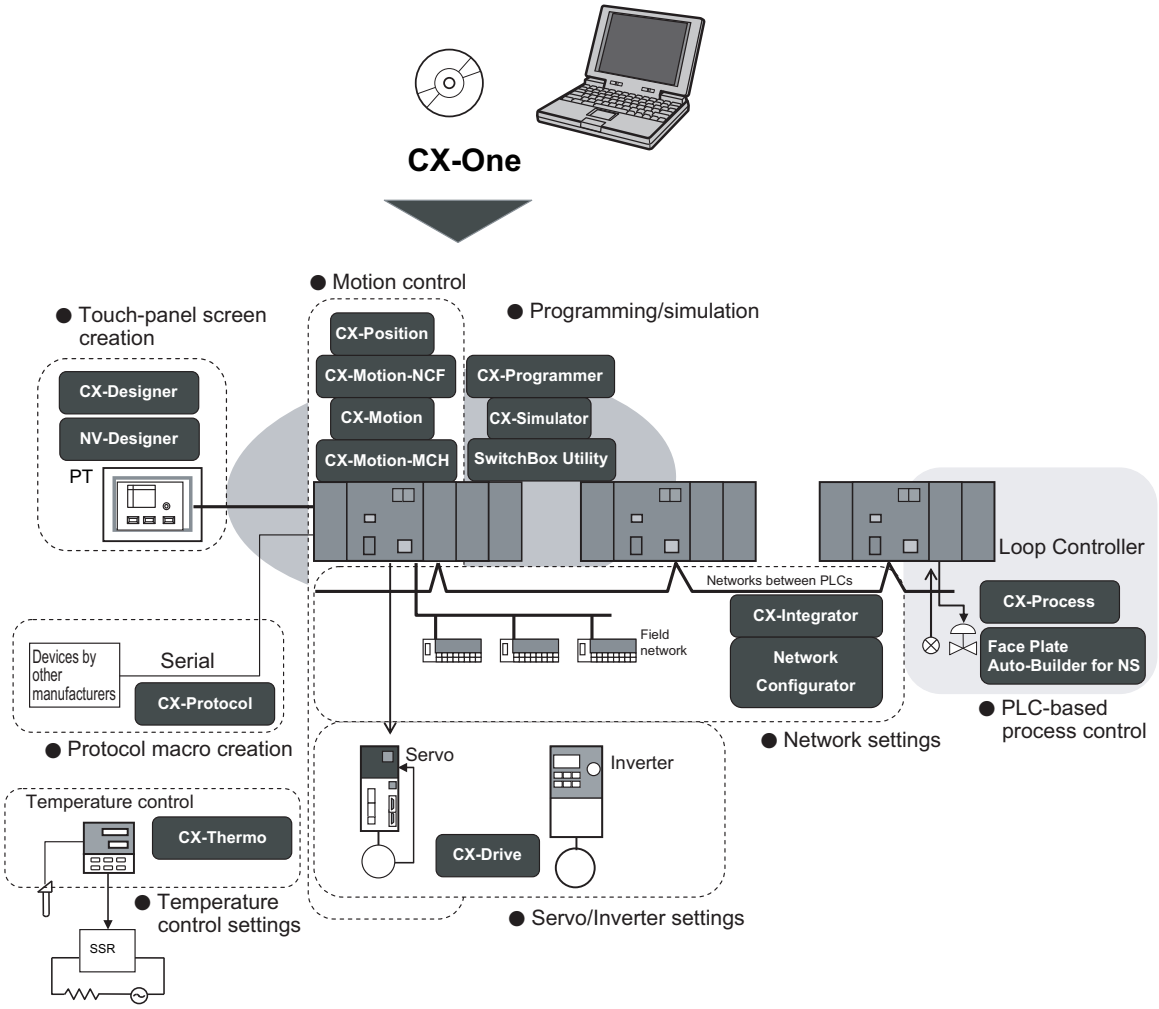

Application	CX-One Software	Description
Programming	**CX-Programmer**	Basic software for creating and debugging PLC programs.
	SwitchBox Utility	Utility software to support PLC debugging operations.
Network settings	**CX-Integrator**	Software for starting and setting FA networks, such as Controller Link, DeviceNet, CompoWay/F, Ethernet, and CompoNet. Includes routing table components, data link components, and DeviceNet Configurator functions.
	Network Configurator	Software for setting tag data links for the built-in EtherNet/IP port.
	CX-FLnet	Software for making FL-net Unit system settings and performing monitoring.
EIP21S User Management Tool	**EIP21S User Management Tool**	Software for managing the users and reading the operation logs for the CJ3M-CPU3□ Built-in EtherNet/IP and CS1W/CJ1W-EIP21S.
Touch-panel screen creation	**CX-Designer**	Software for creating screen data for touch panel NS-series PTs.
	NV-Designer	Software for creating screen data for touch panel NV-series PTs.
Protocol macro creation	**CX-Protocol**	Software for creating protocols (protocol macros) for exchanging data with general-purpose external devices connected to Serial Communications Boards/Units and Option Boards.
Simulation	**CX-Simulator**	Software for simulating PLC operations on a personal computer and debugging programs without requiring a CPU Unit.
Motion Control	**CX-Position**	Software for creating and monitoring data for Position Control Units.
	CX-Motion-NCF	Software for creating and monitoring data for Position Control Units (MECHATROLINK communications models).
	CX-Motion-MCH	Software for creating data for Motion Control Units (MECHATROLINK communications models), and for creating and monitoring motion programs.
	CX-Motion	Software for creating data for Motion Control Units, and for creating and monitoring motion programs.
Servo/Inverter settings	**CX-Drive**	Software for setting and adjusting Inverter and servo data.
PLC-based process control	**CX-Process Tool**	Software for creating and debugging function blocks for Loop Controllers (Loop Control Units/Boards, Process CPU Units, and Loop CPU Units).
	Face Plate Auto-Builder for NS	Software for automatic generation of screen data (project files) for touch panel NS-series PTs from Loop Controller function block tag information.
Temperature control settings	**CX-Thermo**	Software for setting and adjusting Temperature Controller parameters.

CX-Programmer

The CX-Programmer is a basic software application for creating and debugging PLC programs.

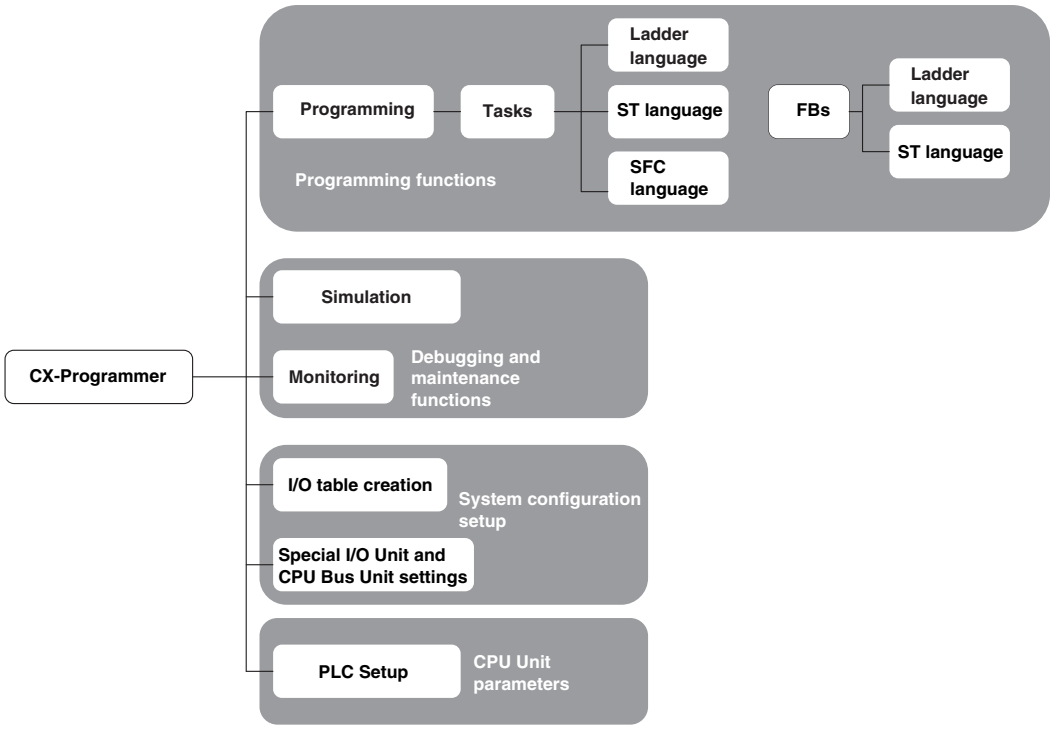

CX-Integrator

The CX-Integrator is a software application for setting up FA networks, such as Controller Link, DeviceNet, CompoWay/F, Ethernet, and CompoNet.

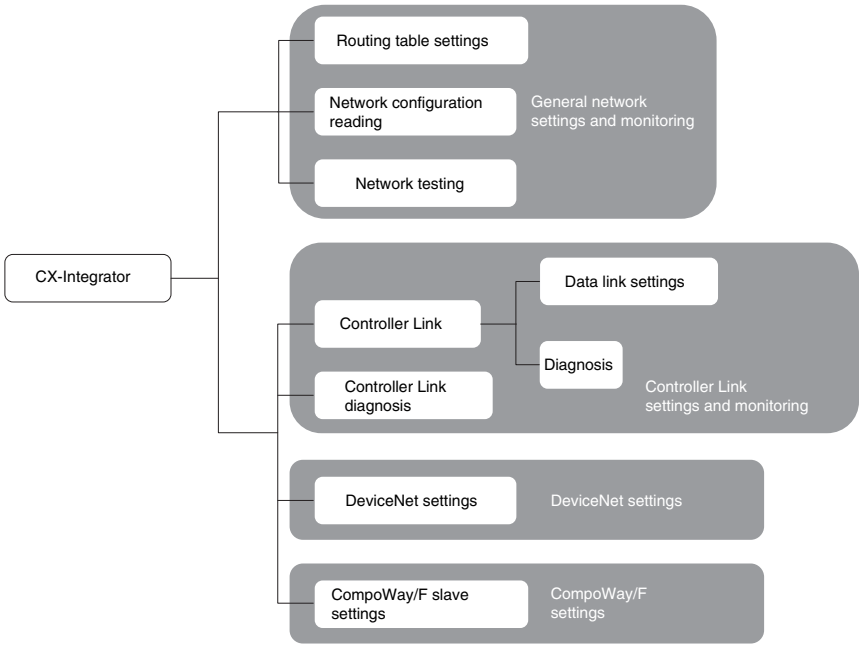

Network Configurator

The Network Configurator is software for setting tag data links using the built-in EtherNet/IP port.

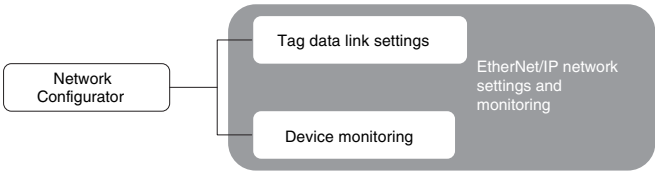

Precautions for Correct Use

For details on the Windows operating systems (OS) supported by each peripheral tool including CX-One, refer to the OMRON website (www.fa.omron.co.jp or www.ia.omron.com).

4-2 Connection Methods

A CPU Unit can be directly connected to a personal computer running the CX-One Support Software (e.g., CX-Programmer) by using a USB cable or RS-232C cable. Also, an Ethernet twisted-pair cable can be used for the CJ3M-CPU3□.

Refer to the *SYSMAC CX-Programmer Ver.9.□ Operation Manual* (Cat. No. W446) for information on the connection methods that are not described here.

4-2-1 Connecting by USB

Connection Method

Using commercially available USB cable, connect CX-One Support Software via a standard peripheral (USB) port at the personal computer.

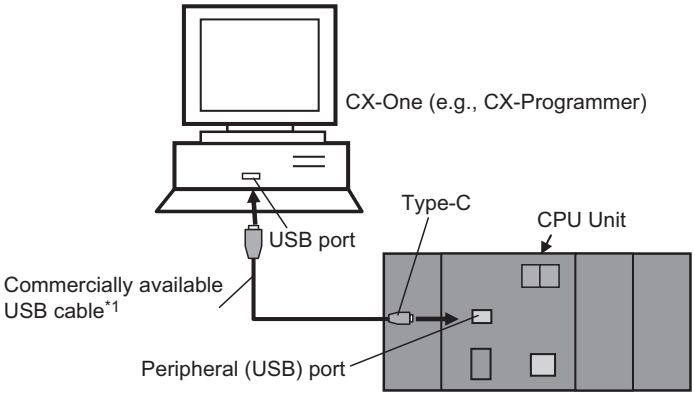

*1 Commercially available USB cable for USB 1.1 or 2.0.

Connecting Cable

Use the following cable to connect the CPU Unit to the computer running the Support Software.

Port at Unit	Port at computer	Network type (communications mode)	Cable	Remarks
Peripheral (USB) port (Conforms to USB 2.0)	USB port	12 Mbps, USB 2.0	Commercially available USB cable (A connector - B connector)	---

Before Connecting

In order to connect the PLC to a personal computer by USB, a USB driver must be installed in the personal computer. When installing the CX-One, the installer automatically stores the USB driver for USB connections in the following directory on the OS disc drive:

- For 32-bit Windows

  C:\Program Files\OMRON\CX-Server\USB

- For 64-bit Windows

  C:\Program Files(x86)\OMRON\CX-Server\USB

When the personal computer is connected to the PLC by USB cable, the personal computer automatically recognizes the device and the USB driver installation is started. For details on how to install the USB driver, refer to *A-9 Installing the USB Driver*.

CX-Programmer Settings

The method for connecting the PLC to the personal computer is set using the CX-Programmer. For details on using the CX-Programmer to set the connection method, refer to *Section 11 Programming Devices and Communications* in the *CJ2/CJ3 CPU Unit Software User's Manual* (W473).

Restrictions on Connecting by USB

Based on USB specifications, the following restrictions apply when connecting a personal computer and components.

- Only one CPU Unit can be connected by USB to a single personal computer. It is not possible to connect multiple CPU Units simultaneously.
- Do not remove the USB cable while connected online. The application must be offline before the cable is removed.

Additional Information

The USB port on a computer can be connected to the PLC serial port (RS-232C) by using CS1W-CIF31 USB-Serial Conversion Cable. (The USB driver for the CS1W-CIF31 must be installed.)

Refer to *A-9 Installing the USB Driver* for the installation procedure for the USB driver.

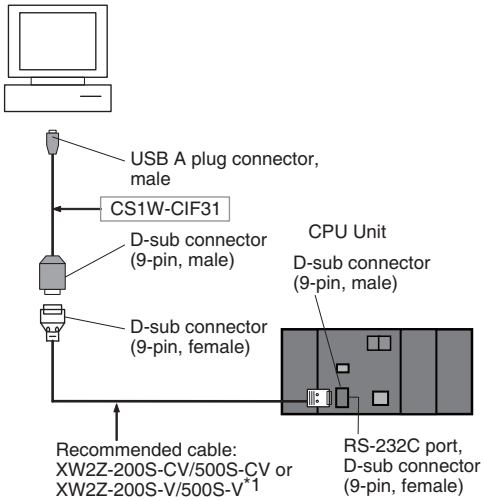

*1 Only a Host Link connection is possible.

4-2-2 Connecting by RS-232C

Connection Method

Using available RS-232C cable, directly connect the CX-One Support Software (e.g., CX-Programmer) via a standard serial port at the personal computer.

The network type must be set to the Toolbus. A Host Link connection cannot be used.

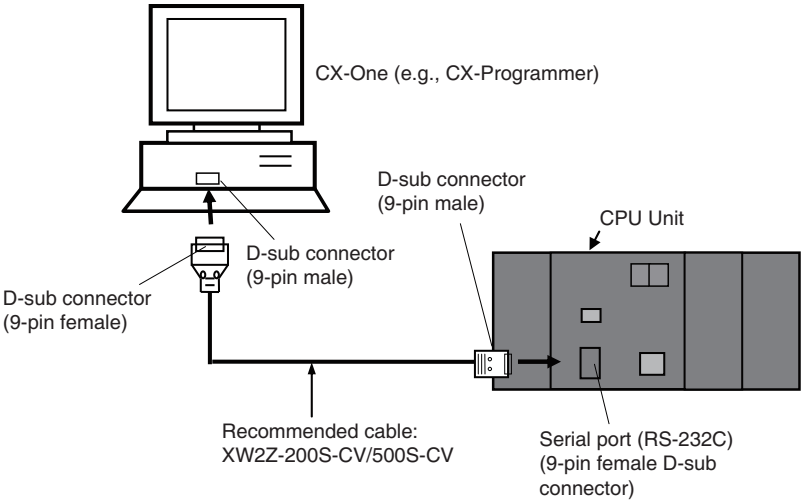

Additional Information

Connecting to the PLC by EtherNet/IP via USB or RS-232C
The Support Software can be directly connected by USB or RS-232C to one CPU Unit and access other CPU Units on the EtherNet/IP network via the built-in EtherNet/IP ports on the CJ2/CJ3 CPU Units. For details, refer to *Section 11 Programming Devices and Communications* in the *CJ2/CJ3 CPU Unit Software User's Manual* (W473).

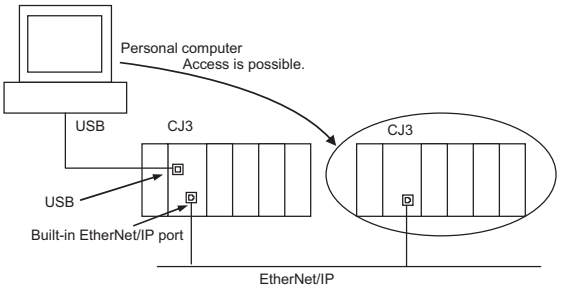

Connecting Cable

Use the following cable to connect the CPU Unit to the computer running the Support Software.

Port at Unit	Port at computer	Network type (communications mode)	Model	Length	Remarks
Serial port (RS-232C) (D-sub, 9-pin, female)	D-sub, 9-pin, male	Serial communications	XW2Z-200S-CV	2 m	Use a static-resistant connector.
			XW2Z-500S-CV	5 m	

Precautions for Safe Use

- When the above cable connector is connected to the PLC serial port (RS-232C), be sure to discharge static electricity by touching grounded metal before touching the cable connector. The XW2Z-□□□S-CV Cable is particularly resistant to static electricity because it uses a static-resistant connector hood (XM2S-0911-E). Even when this Cable is used, however, be sure to discharge static electricity before touching the connector.
- Use the specialized cable described above for connecting cable. Using ordinary commercially available RS-232C cable for personal computers may result in damage to external devices and the CPU Unit.

Additional Information

It is possible to create RS-232C cable for connecting to the serial port (RS-232C). For details on creating cables, refer to *A-4 Connecting to a Serial Port on the CPU Unit*.

Examples of applicable connectors

Name	Model	Specifications	
Plug	XM3A-0921 or equivalent	9-pin, male	Use in combination.
Hood	XM2S-0911-E or equivalent	9-pin static-resistant connector with millimeter screws	

Setting the Communications Protocol

Select the protocol for communications between the PLC and the CX-Programmer. For a SYSMAC WAY (Host Link) connection, turn OFF pin 5 of the DIP switch on the front panel. For a peripheral bus connection (faster than SYSMAC WAY), turn ON pin 5.

CX-Programmer Settings

The method for connecting the PLC to the personal computer is set using the CX-Programmer. For details on using the CX-Programmer to set the connection method, refer to *Section 11 Programming Devices and Communications* in the *CJ2/CJ3 CPU Unit Software User's Manual* (W473).

4-2-3 Connecting to Ethernet

Connection Method

CPU Unit built-in EtherNet/IP port or EtherNet/IP Unit and peripheral tool CX-One (CX-Programmer, etc.) can be connected via a switching hub by commercially available Ethernet 100BASE-TX STP (shielded twisted-pair) cable.

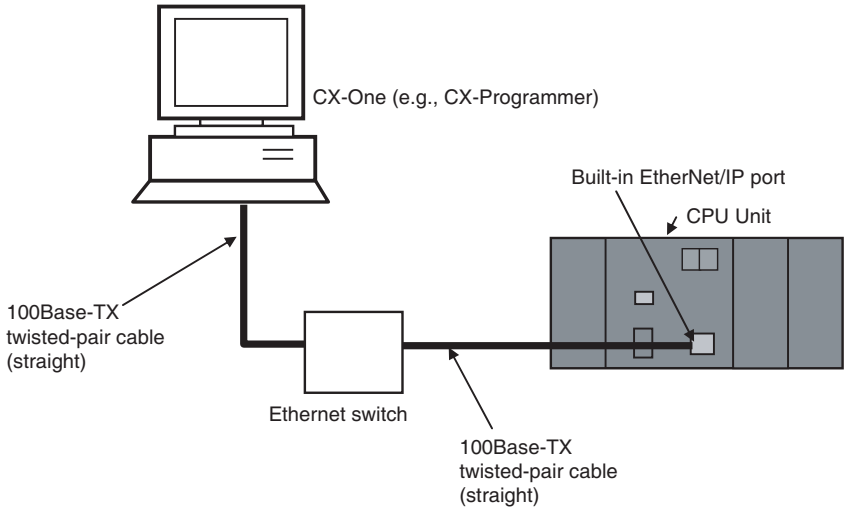

Connecting Cable

Use the following cable to connect the CPU Unit to the computer running the Support Software.

Port at Unit	Port at computer	Network type (communications mode)	Model	Length	Remarks
EtherNet/IP port	Ethernet port	100Base-TX or 10Base-T*1	Commercially available twisted-pair cable*2	100 m (Recommended between Ethernet switch and nodes.)	---
			Commercially available Ethernet switch*2, *3	---	

*1 Use 100Base-TX when using tag data links.

*2 The following table shows the devices recommended for use with the built-in EtherNet/IP port.

Part	Manufacturer	Model number	Specifications
Switching hub	OMRON	W4S1-05D	5 ports
	Cisco Systems, Inc.	Consult the manufacturer.	-
	Contec USA, Inc.	Consult the manufacturer.	-
	Phoenix Contact	Consult the manufacturer.	-
Twisted-pair cable	**100BASE-TX**		
	Kuramo Electric Co.	KETH-SB	AWG24 x 4P, Cat5e
		KETH-PSB-OMR	AWG22 x 2P, Cat5e
	JMACS Japan Co., Ltd.	IETP-SB	AWG24 x 4P, Cat5e
		PNET/B	AWG22 x 2P, Cat5e
	Otherwise, category 5 or 5e Ethernet cable		
Connector	**STP Plug**		
	Panduit Corporation	MPS588-C	For AWG24
	OMRON	XS6G-T421-1	For AWG22
	Otherwise, STP plug		

*3 Always use an Ethernet switch when using tag data links in the network. If a repeater hub is used for EtherNet/IP tag data links (cyclic communications), the network's communications load will increase, data collisions will occur frequently, and stable communications will be impossible.

Before Connecting

To connect using Ethernet, first set the IP address and subnet mask of the computer in advance as shown in the following example.

- **IP Addresses**

Example: 192.168.250.2

User-set value (1 to 254)

Value for same segment as IP address of built-in EtherNet/IP port

- **Subnet Mask**

Example: 255.255.255.000

User-set value (0 to 252)

Class C mask

CX-Programmer Settings

The method for connecting the PLC to the personal computer is set using the CX-Programmer. For details on using the CX-Programmer to set the connection method, refer to *Section 11 Programming Devices and Communications* in the *CJ2/CJ3 CPU Unit Software User's Manual* (W473).

Precautions for Correct Use

When connecting online with Secure Comm, authentication will fail and the CPU Unit will not be able to connect online if the user name and password do not match. Make a note of the user name and password. If you forget them, clear the authentication settings as described in the troubleshooting procedure. When doing so, note that the settings will be reset to the defaults.

Additional Information

- The CX-Programmer can be used for remote programming and monitoring. It can be used to program and monitor not only the PLC to which it is directly connected, but also to program and monitor any PLC connected through a Controller Link or Ethernet network to which the PLC that the CX-Programmer is connected to is a part of. All programming and monitoring functionality for the directly connected PLC is supported for remote programming and monitoring. For details, refer to *Section 11 Programming Devices and Communications* in the *CJ2/CJ3 CPU Unit Software User's Manual* (W473).

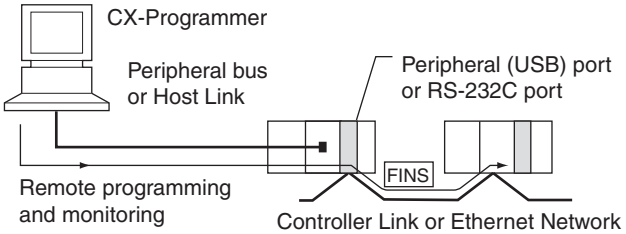

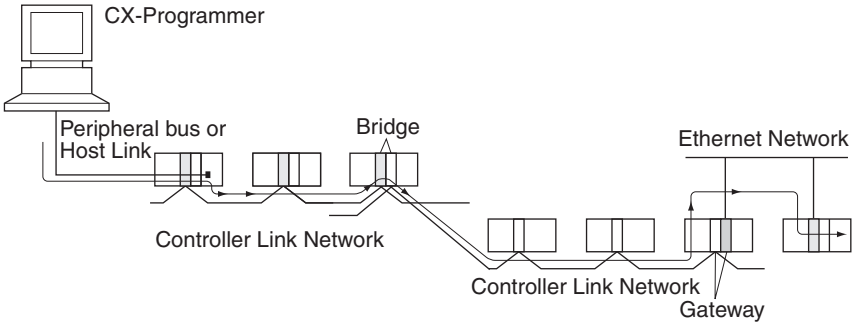

Precautions for Correct Use

Connecting to a Programming Device through the built-in EtherNet/IP port will not be possible if the following errors occur:

- I/O bus error
- Too many I/O points error
- Unit number duplication error
- Rack number duplication error
- I/O setting error

If any of the above errors occurs and connecting to the Programming Device through the built-in EtherNet/IP port is not possible, connect through the USB port.

5

Installation

This section describes how to install and wire a CJ3 PLC.

5-1 Fail-safe Circuits 5-2

5-2 Installation 5-4

5-2-1 Installation and Wiring Precautions 5-4
5-2-2 Installation in a Control Panel 5-6
5-2-3 Assembled Appearance and Dimensions 5-8
5-2-4 Connecting PLC Components 5-12
5-2-5 DIN Track Installation 5-14
5-2-6 Connecting CJ-series Expansion Racks 5-16

5-3 Wiring 5-19

5-3-1 Power Supply Wiring 5-19
5-3-2 Wiring CJ-series Basic I/O Units with Terminal Blocks 5-26
5-3-3 Wiring Basic I/O Units with Connectors 5-28
5-3-4 Connecting to Connector-Terminal Block Conversion Units or I/O Relay Terminals 5-32
5-3-5 Connecting Pulse I/O Modules to External I/O Devices 5-32
5-3-6 Connecting I/O Devices 5-34
5-3-7 Wiring of Ethernet Cable 5-38

5-4 Control Panel Installation 5-41

5-4-1 Temperature 5-41
5-4-2 Humidity 5-43
5-4-3 Vibration and Shock 5-43
5-4-4 Atmosphere 5-43
5-4-5 Electrical Environment 5-44
5-4-6 Grounding 5-49

5-1 Fail-safe Circuits

Be sure to set up safety circuits outside of the PLC to prevent dangerous conditions in the event of errors in the PLC or external power supply.

Order of Powering Up the CPU Unit and Controlled System

Outputs from Units such as DC Output Units may malfunction momentarily when the power to the PLC is turned ON. This may cause problems in the system if the PLC's power supply is turned ON after the controlled system's power supply. To prevent possible malfunctions, add an external circuit that prevents the power supply to the controlled system from going ON before the power supply to the PLC itself.

Managing CPU Unit Errors

When any of the following errors occurs, PLC operation will stop and all outputs from Output Units will be turned OFF.

- Operation of the Power Supply Unit's overcurrent protection circuit
- A CPU error (watchdog timer error) or CPU on standby
- A fatal error (memory error, Memory Card transfer error, I/O bus error, Unit/Rack number duplication error, too many I/O points error, I/O setting error, program error, cycle time exceeded error, or FALS(007) error)*1

Be sure to add any circuits necessary outside of the PLC to ensure the safety of the system in the event of an error that stops PLC operation.

*1 When a fatal error occurs, all outputs from Output Units will be turned OFF even if the IOM Hold Bit has been turned ON to protect the contents of I/O memory. (When the IOM Hold Bit is ON, the outputs will retain their previous status after the PLC has been switched from RUN/MONITOR mode to PROGRAM mode.)

Managing Output Malfunctions

It is possible for an output to remain ON due to a malfunction in the internal circuitry of the Output Unit, such as a relay or transistor malfunction. Be sure to add any circuits necessary outside of the PLC to ensure the safety of the system in the event that an output fails to go OFF.

Emergency Stop Circuit

The following emergency stop circuit controls the power supply to the controlled system so that power is supplied to the controlled system only when the PLC is operating and the RUN output is ON.

An external relay (CR1) is connected to the RUN output from the Power Supply Unit*1 as shown in the following diagram.

*1 A RUN output is provided only on the CJ1W-PA205R Power Supply Unit. When a Power Supply Unit without a RUN output is used, program the Always ON Flag (A1) as the execution condition for an output point from an Output Unit.

● Electrical Diagram

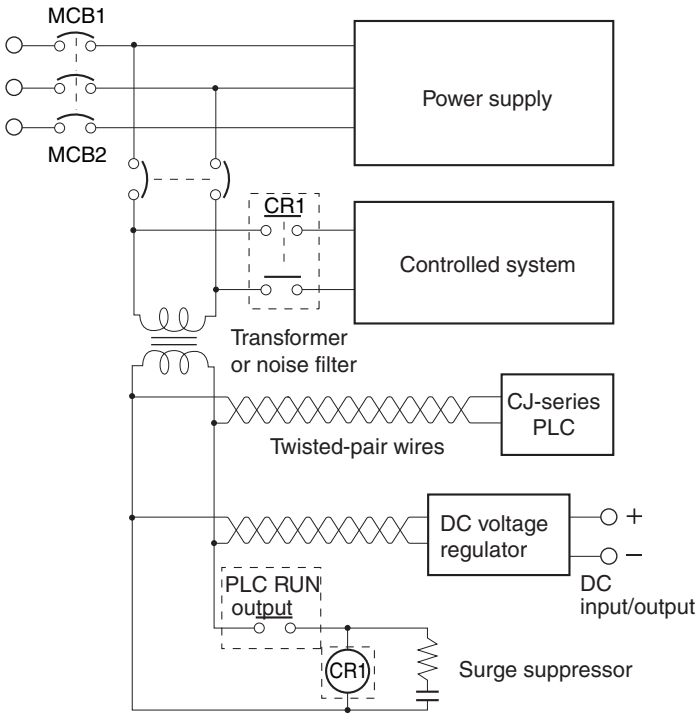

Interlock Circuits

When the PLC controls an operation such as the clockwise and counterclockwise operation of a motor, provide an external interlock such as the one shown in the following example to prevent both the forward and reverse outputs from turning ON at the same time.

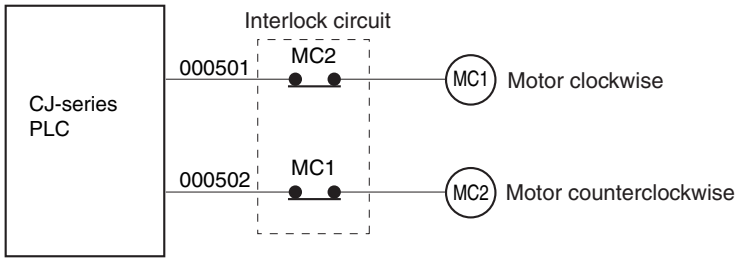

This circuit prevents outputs MC1 and MC2 from both being ON at the same time even if both CIO 000501 and CIO 000502 are ON, so the motor is protected even if the PLC is programmed improperly or malfunctions.

5-2 Installation

5-2-1 Installation and Wiring Precautions

Installation in Cabinets or Control Panels

When the PLC is being installed in a cabinet or control panel, be sure to provide proper ambient conditions as well as access for operation and maintenance.

● Temperature Control

The ambient temperature within the enclosure must be within the operating range of 0 to 55°C. When necessary, take the following steps to maintain the proper temperature.

- Provide enough space for good air flow.
- Do not install the PLC above equipment that generates a large amount of heat such as heaters, transformers, or high-capacity resistors.
- If the ambient temperature exceeds 55°C, install a cooling fan or air conditioner.

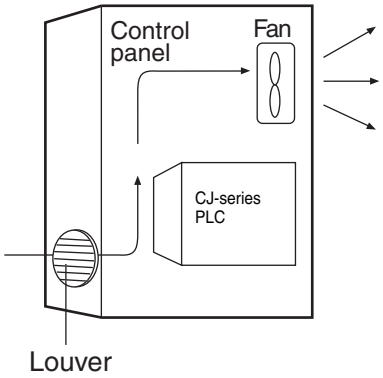

● Accessibility for Operation and Maintenance

- To ensure safe access for operation and maintenance, separate the PLC as much as possible from high-voltage equipment and power machinery.
- The PLC will be easiest to install and operate if it is mounted at a height of 1.0 to 1.6 m above the floor.

● Improving Noise Resistance

- Do not mount the PLC in a control panel containing high-voltage equipment.
- Install the PLC at least 200 mm from power lines.

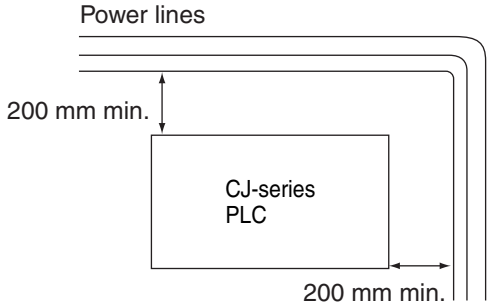

- Ground the mounting plate between the PLC and the mounting surface.
- When I/O Connecting Cables are 10 m or longer, connect the control panels in which Racks are mounted with heavier power wires (3 wires at least 2 mm^2 in cross-sectional area).

PLC Orientation

- Each Rack must be mounted in an upright position to provide proper cooling.

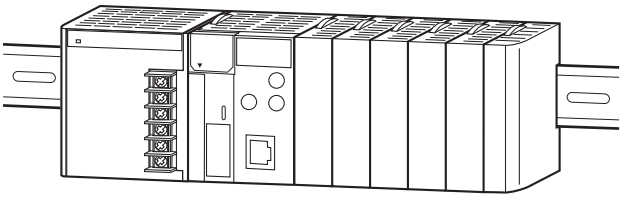

- Do not install a Rack in any of the following positions.

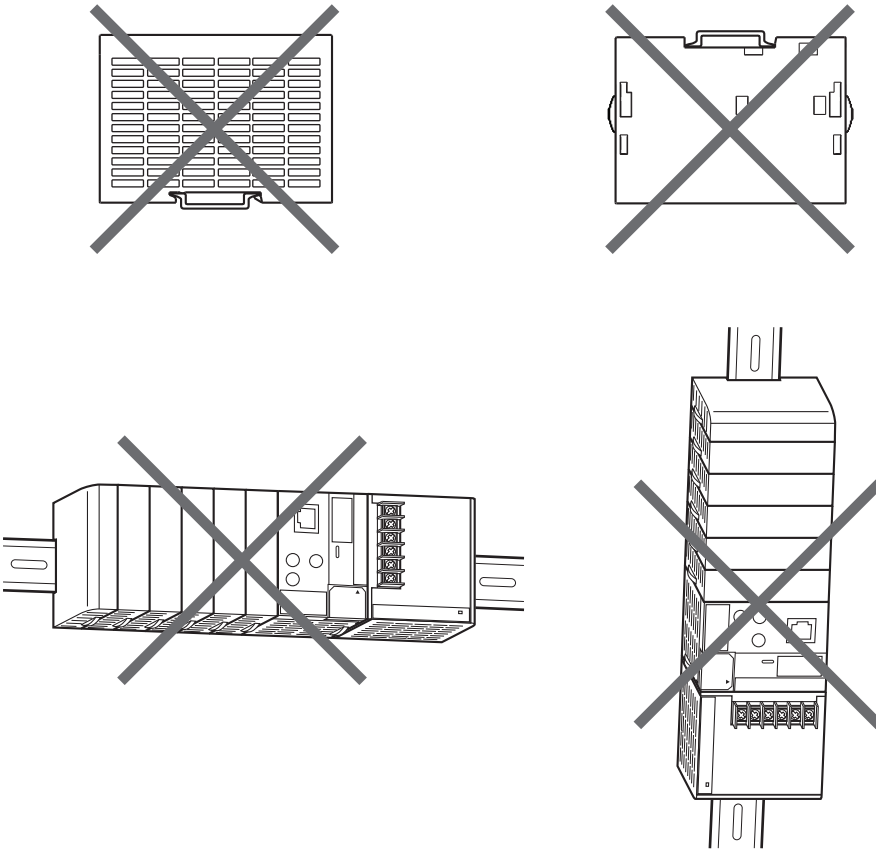

Precautions for Safe Use

Always use the standard installation method. A nonstandard installation will decrease heat dissipation, and may delay the replacement notification signal (in particular for Power Supply Units with Replacement Notification (CJ1W-PA205C)), or degrade or damage the internal elements.

5-2-2 Installation in a Control Panel

Control Panel Installation Dimensions

A CJ-series PLC must be mounted inside a control panel on DIN Track. Normally the CPU Rack is installed on top and the Expansion Racks under it.

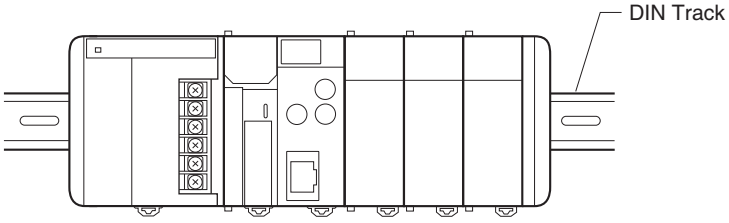

- Consider the width of wiring ducts, wiring, ventilation, and Unit replacement when determining the space between Racks. When you install Racks vertically, allow at least 66 mm between any two adjacent Racks.

Additional Information

A CJ-series PLC must be mounted on DIN Track. It cannot be mounted with screws.

- Whenever possible, route I/O wiring through wiring ducts or raceways. Install the duct so that it is easy to fish wire from the I/O Units through the duct. It is handy to have the duct at the same height as the Racks.

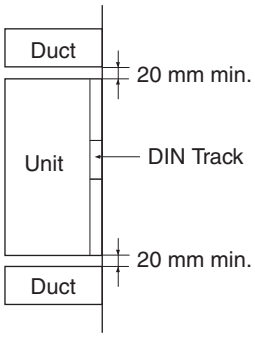

Wiring Ducts

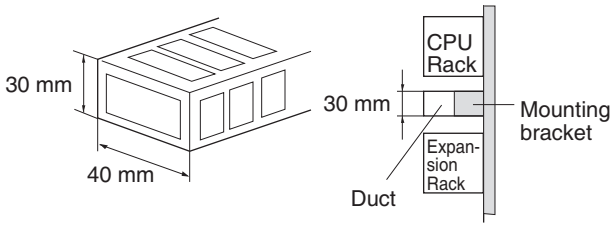

Precautions for Correct Use

Tighten terminal block screws and cable screws to the following torques.

Terminal Screws
M4: 1.2 N·m
M3: 0.5 N·m

Cable Connector Screws
M2.6: 0.2 N·m

Routing Wiring Ducts

Install the wiring ducts at least 20 mm between the tops of the Racks and any other objects, (e.g., ceiling, wiring ducts, structural supports, devices, etc.) to provide enough space for air circulation and replacement of Units.

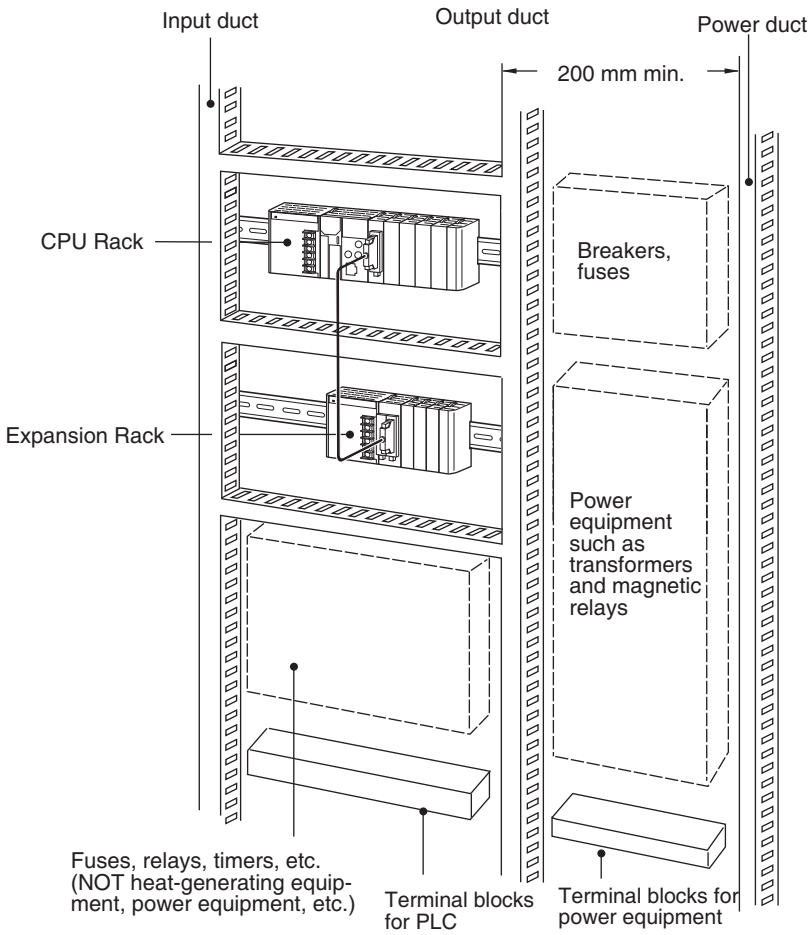

5-2-3 Assembled Appearance and Dimensions

The CJ-series Units, including the Power Supply Unit, the CPU Unit, and I/O Units, are connected to each other and an End Cover is connected to the right end.

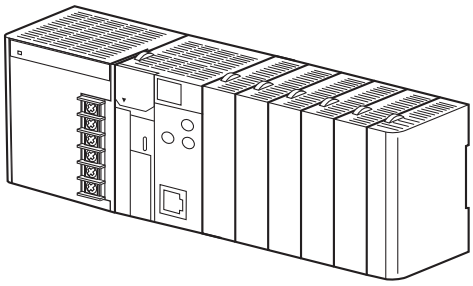

Dimensions (Unit: mm)

Power Supply Unit

Name	Model number	Specifications	Unit width
Power Supply Unit	CJ1W-PA205R	100 to 240 VAC, 25 W	80 mm
	CJ1W-PA205C	100 to 240 VAC, 25 W	80 mm
	CJ1W-PA202	100 to 240 VAC, 14 W	45 mm
	CJ1W-PD025	24 VDC, 25 W	60 mm
	CJ1W-PD022	24 VDC, 19.6 W	27 mm

CPU Unit

Name	Model number	Unit width
CPU Unit	CJ3M-CPU3□	62 mm
	CJ3M-CPU1□	31 mm

Pulse I/O Module

Name	Model number	Unit width
Pulse I/O Module	CJ2M-MD21□	20 mm

End Cover

Name	Model number	Unit width
End Cover	CJ1W-TER01	14.7 mm

Other than the CPU Units and Power Supply Units, CJ-series Units come in four widths: 20 mm, 31 mm, 51 mm, and 79.8 mm.

20-mm-wide Units

Name	Model number	Unit width
I/O Control Unit	CJ1W-IC101	20 mm
32-point Basic I/O Units	CJ1W-ID231/ID232/ID233	
	CJ1W-OD231/OD232/OD233/OD234	
B7A Interface Units	CJ1W-B7A22 CJ1W-B7A14 CJ1W-B7A04	
CompoBus/S Master Unit	CJ1W-SRM21	
Space Unit	CJ1W-SP001	

31-mm-wide Units

Name	Model number	Unit width
I/O Interface Unit	CJ1W-II101	31 mm
8-point and 16-point Basic I/O Units	CJ1W-ID201 CJ1W-ID211/212 CJ1W-IA111/201 CJ1W-OD201/202/203/204 CJ1W-OD211/212/213 CJ1W-OC201/211 CJ1W-OA201/201-1	
32-point Basic I/O Units	CJ1W-MD231/232/233	
64-point Basic I/O Units	CJ1W-ID261 CJ1W-OD261 CJ1W-MD261	
	CJ1W-ID262 CJ1W-OD262/263 CJ1W-MD263/563	
Interrupt Input Unit	CJ1W-INT01	
Quick-response Input Unit	CJ1W-IDP01	
Analog I/O Units	CJ1W-ADG41 CJ1W-AD□□□-V1 CJ1W-AD042 CJ1W-DA□□□ CJ1W-DA042V CJ1W-MAD42	
Process I/O Units	CJ1W-AD04U CJ1W-PH41U CJ1W-PTS51/52/15/16 CJ1W-PDC15	
Temperature Control Units	CJ1W-TC□□□	
Position Control Units (with pulse-string outputs)	CJ1W-NC113/133/213/233/413/433	
Position Control Units (with EtherCAT communications)	CJ1W-NC281/481/881/NCF81 CJ1W-NC482/882/F82	
MECHATROLINK-II Position Control Unit	CJ1W-NC271/471/F71(-MA)	
High-speed Counter Unit	CJ1W-CT021	
ID Sensor Units	CJ1W-V680C11 CJ1W-V680C12 CJ1W-V600C11 CJ1W-V600C12	
Controller Link Unit	CJ1W-CLK23	
Serial Communications Units	CJ1W-SCU21/31/41-V1 CJ1W-SCU22/32/42	
Ethernet Unit	CJ1W-ETN21	
EtherNet/IP Unit	CJ1W-EIP21/EIP21S	
DeviceNet Unit	CJ1W-DRM21	
CompoNet Master Unit	CJ1W-CRM21	
FL-net Unit	CJ1W-FLN22	
EtherCAT Slave Unit	CJ1W-ECT21	

51-mm-wide Units

Name	Model number	Unit width
SYSMAC SPU Unit (High-speed Data Storage Unit)	CJ1W-SPU01-V2	51 mm
Position Control Units	CJ1W-NC214/234	

62-mm-wide Units

Name	Model number	Unit width
Position Control Units	CJ1W-NC414/434	62 mm

79.8-mm-wide Units

Name	Model number	Unit width
MECHATROLINK-II Motion Control Unit	CJ1W-MCH71	79.8 mm

● Design Example for Width W

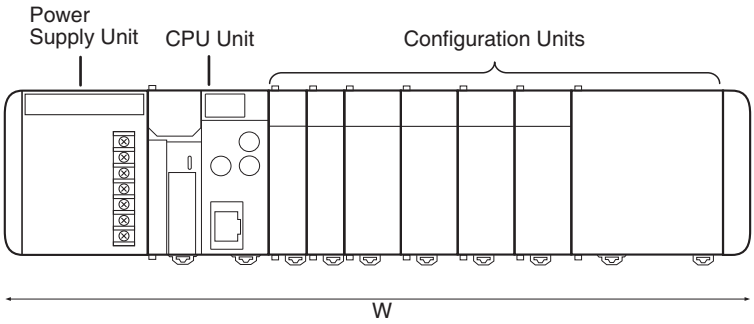

Power Supply Unit: CJ1W-PA205R (80 mm)

CPU Unit: CJ3M-CPU35 (62mm)

Basic I/O Units: CJ1W-ID231 (20 mm) × 2

Special I/O Units: CJ1W-AD081-V1 (31 mm) × 4

CPU Bus Unit: CJ1W-NC414 (62 mm)

W = 80 + 62 + 20 x 2 + 31 × 4 + 62 × 1 + 14.7 (End Cover) = 382.7 mm

Installation Dimensions (Unit: mm)

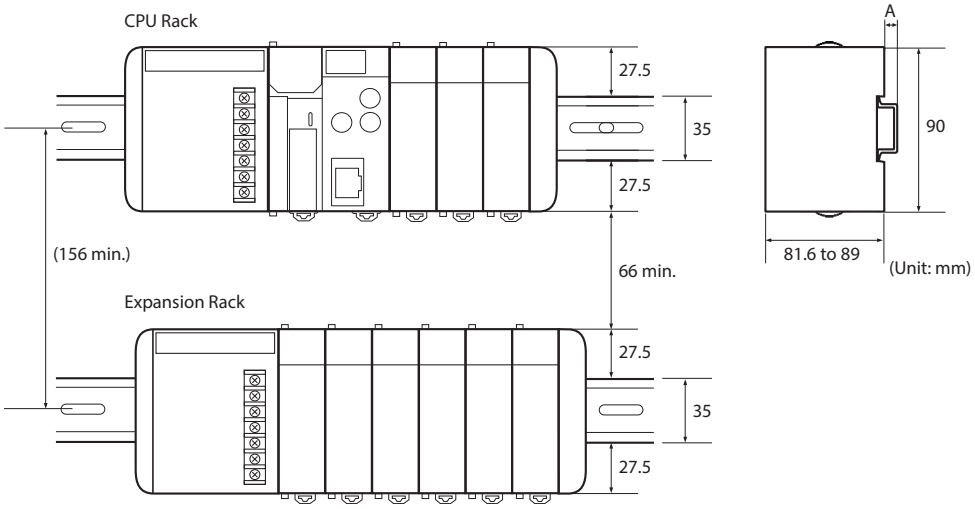

DIN Track	A
PFP-100N2	12 m
PFP-100N	3.3 n
PFP-50N	3.3 n

Installation Height

The installation height of the CJ-series CPU Rack and Expansion Racks varies from 81.6 to 89.0 mm, depending on the I/O Units that are mounted. When a Programming Device (e.g., CX-Programmer) is connected, however, even greater height is required. Allow sufficient depth in the control panel containing the PLC.

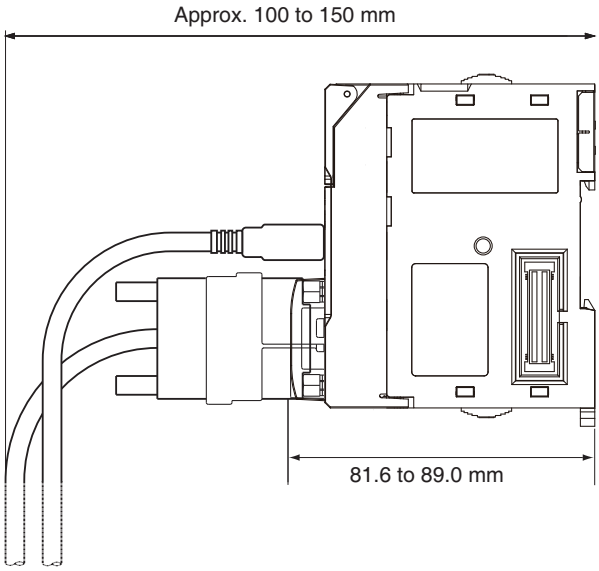

5-2-4 Connecting PLC Components

The Units that make up a CJ-series PLC can be connected simply by pressing the Units together and locking the sliders by moving them toward the back of the Units. The End Cover is connected in the same way to the Unit on the far right side of the PLC.

1 Join the Units so that the connectors fit exactly.

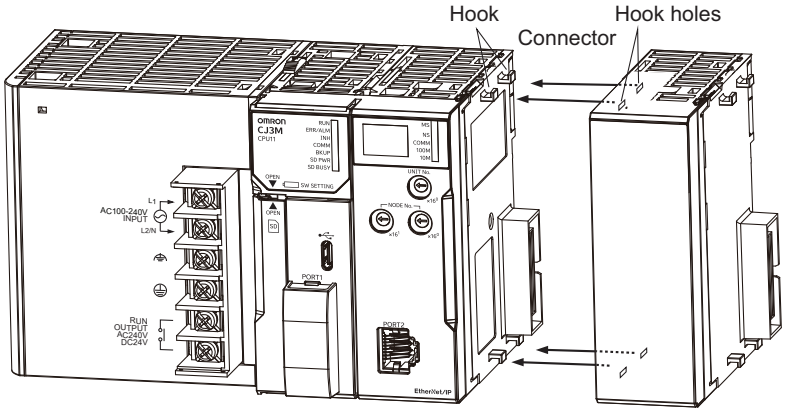

2 The yellow sliders at the top and bottom of each Unit lock the Units together. Move the sliders toward the back of the Units as shown below until they click into place.

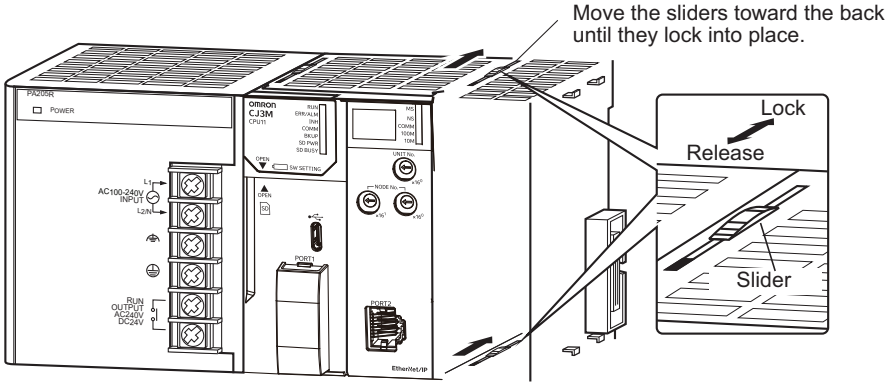

Precautions for Correct Use

If the locking tabs are not secured properly, the connectors may become loose and not function properly. Be sure to slide the locking tabs until they are securely in place.

3 Attach the End Cover to the Unit on the far right side of the Rack.

- **CJ3M CPU Unit**

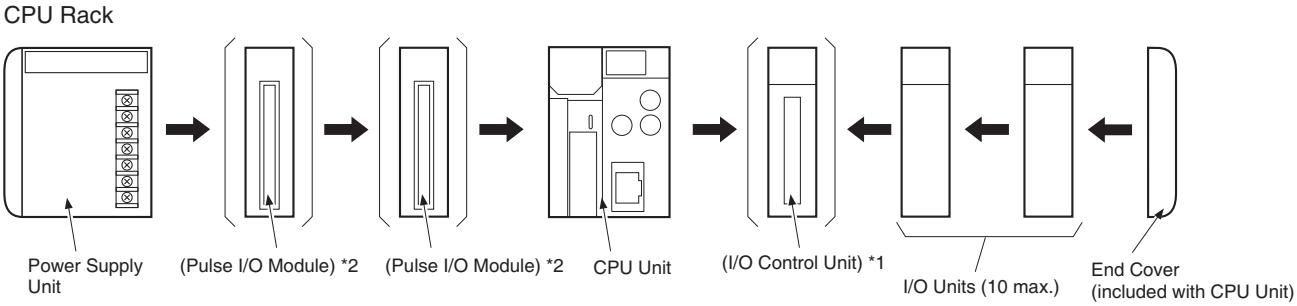

*1: Connect the I/O Control Unit directly to the CPU Unit to enable connecting Expansion Racks.
*2: Up to two Pulse I/O Modules can be connected to the left of the CPU Unit.

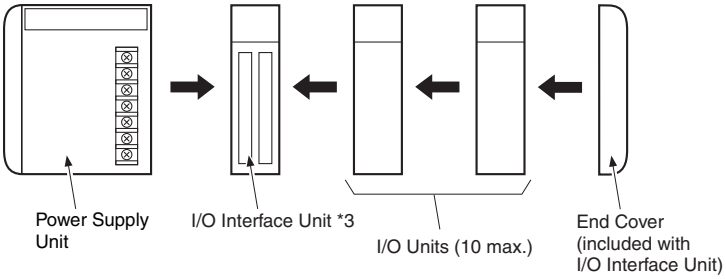

*3: Connect the I/O Interface Unit directly to the Power Supply Unit.

Additional Information

There is no Backplane for the CJ-series. The PLC is constructed by connecting Units together using the connectors on the sides.

Precautions for Correct Use

- Always turn OFF the power supply before connecting Units to each other.
- Always turn OFF the power supply to the entire system before replacing a Unit.
- A maximum of 10 Units can be connected in any one CPU or Expansion Rack. If more than the maximum number of Units are connected, a too many I/O points error (fatal error) will occur and the CJ3 CPU Unit will not operate in either RUN or MONITOR mode. If this occurs, the I/O Overflow Flag (A401.11) will turn ON and A407.13 to A407.15 (I/O Overflow Details 2) will turn ON.

5-2-5 DIN Track Installation

Use the following procedure to install a CJ-series PLC on DIN Track.

1 Release the pins on the backs of the CJ-series Units.

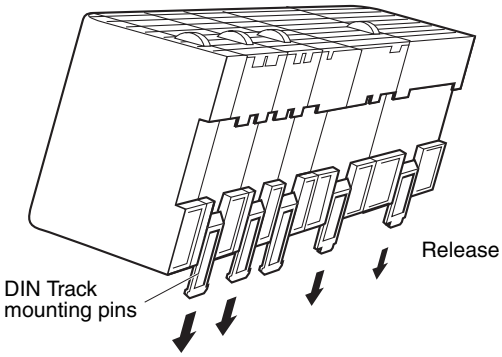

2 Fit the back of the PLC onto the DIN Track by inserting the top of the track and then pressing in at the bottom of the PLC, as shown below.

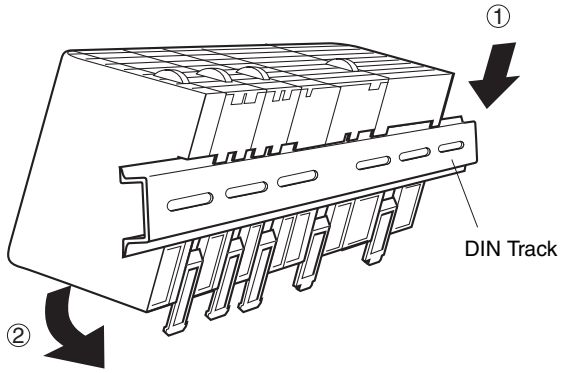

3 Lock the pins on the backs of the CJ-series Units.

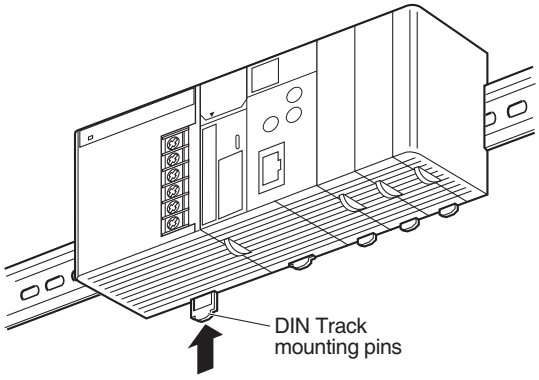

4 Install a DIN Track End Plate on each end of the PLC. To install an End Plate, hook the bottom on the bottom of the track, rotate the Plate to hook the top of the Plate on the top of the track, and then tighten the screw to lock the Plate in place.

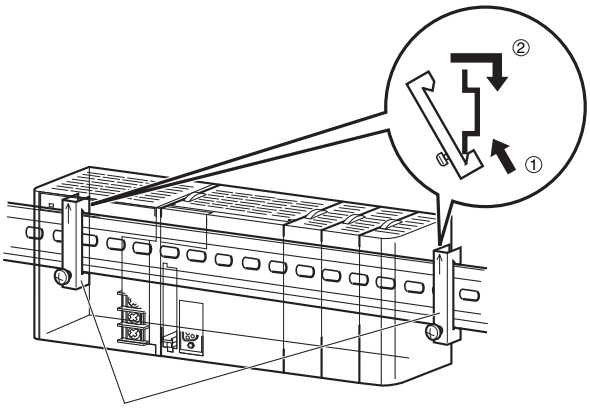

DIN Track and Accessories

Use the DIN Track and DIN Track End Plates shown below. Secure each DIN Track inside a control panel with at least three screws.

- DIN Track
  Model numbers: PFP-50N (50 cm), PFP-100N (100 cm), PFP-100N2 (100 cm)

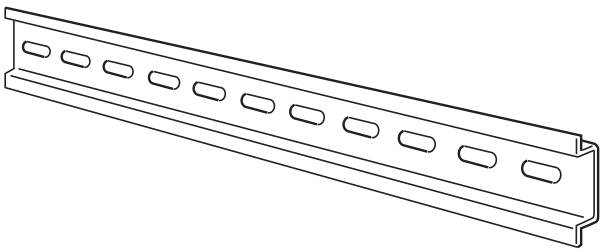

Secure the DIN Track to the control panel using M4 screws separated by 210 mm (6 holes) or less and using at least 3 screws. The tightening torque is 1.2 N·m.

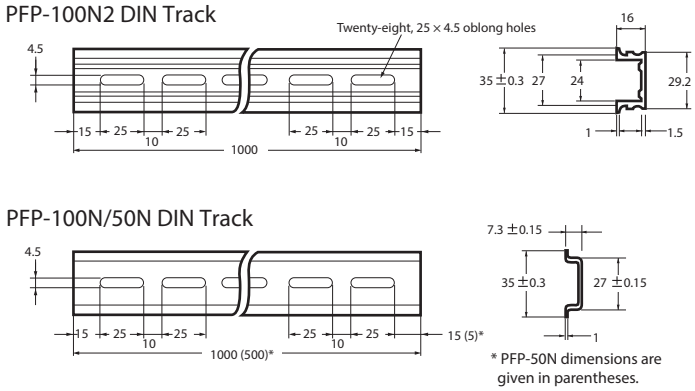

- PFP-M DIN Track End Plates (2 required)

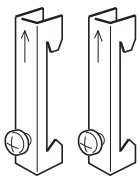

5-2-6 Connecting CJ-series Expansion Racks

CS/CJ-series I/O Connecting Cables are used to connect the CPU Rack and Expansion Racks.

● CS/CJ-series I/O Connecting Cables

- These connectors are equipped with easy-lock connectors.
- Use them to connect the CPU Rack to an Expansion Rack or to connect two Expansion Racks.

Model number	Cable length
CS1W-CN313	0.3 m
CS1W-CN713	0.7 m
CS1W-CN223	2 m
CS1W-CN323	3 m
CS1W-CN523	5 m
CS1W-CN133	10 m
CS1W-CN133-B2	12 m

- The CJ-series I/O Connecting Cables are used to connect the I/O Control Unit on the CPU Rack to the I/O Interface Unit on an Expansion Rack or to connect the I/O Interface Units on two Expansion Racks.
- Install the Racks and select I/O Connecting Cables so that the total length of all I/O Connecting Cables does not exceed 12 m.
- The following diagram shows where each I/O Connecting Cable must be connected on each Rack. The Rack will not operate if the cables aren't connected properly. (The "up" direction is towards the CPU Unit and "down" is away from the CPU Unit.)

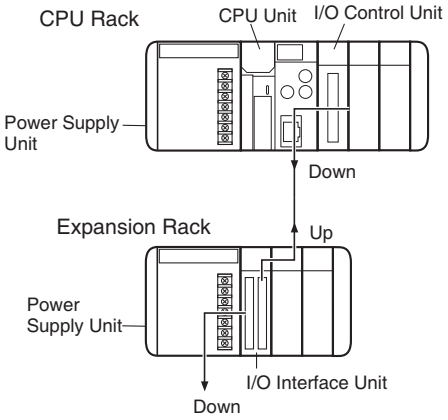

Cable Connections

Connect the cables to the simple lock connectors on the CJ-series CPU Rack (I/O Control Unit) or CJ-series Expansion Rack (I/O Interface Unit).

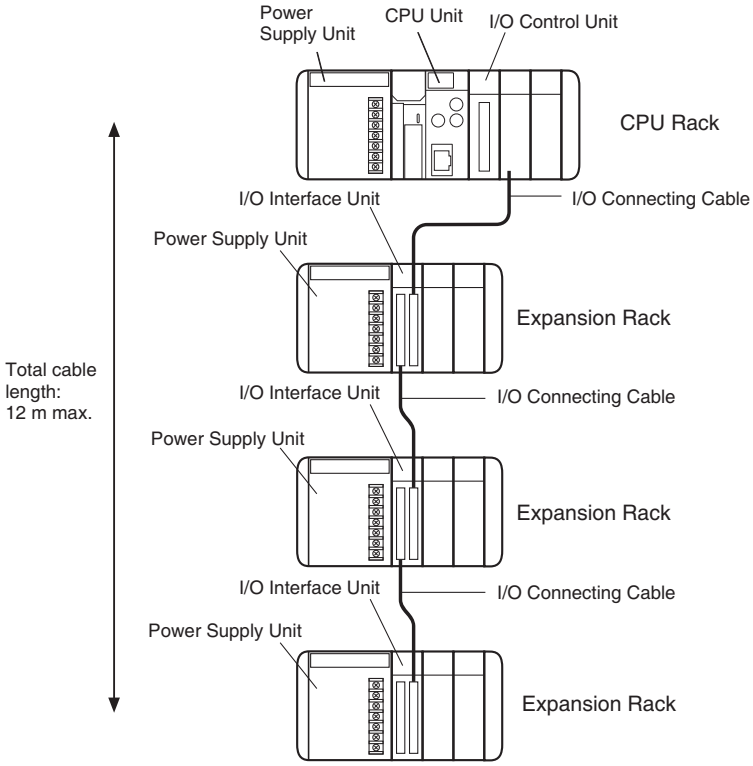

- The top and bottom of the connector are different. Be sure the connector is facing the correct direction before connecting it.
- Up to seven expansion racks can be connected.

Connecting the Simple Locking Connectors

Press the tabs on the end of the connector and insert the connector until it locks in place. The PLC will not operate properly if the connector isn't inserted completely.

To remove the connector, press the tabs and pull on the connector.

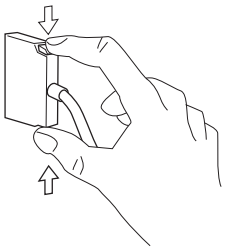

Precautions for Correct Use

- When using an I/O Connecting Cable with a locking connector, be sure that the connector is firmly locked in place before using it.
- Always turn OFF the power supply to the PLC before connecting a cable.
- An I/O bus error will occur and the PLC will stop if an I/O Connecting Cable's connector separates from the Rack. Be sure that the connectors are secure.
- A 63-mm hole will be required if the I/O Connecting Cable must pass through a hole when connecting an Expansion Rack.
- Do not bend the I/O Connecting cable past its natural bending radius or pull in it with excessive force.
- The cables can withstand a pulling force up to 49 N (11 lbs), so be sure that they are not pulled too forcefully.
- The I/O Connecting Cables mustn't be bent too severely. The minimum bending radii are shown in the following diagram.

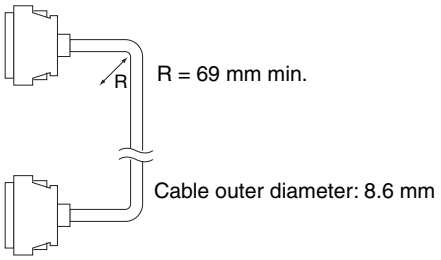

- Always attach the cover to the output connector (left side) on the last I/O Interface Unit on the last Expansion Rack to protect it from dust.

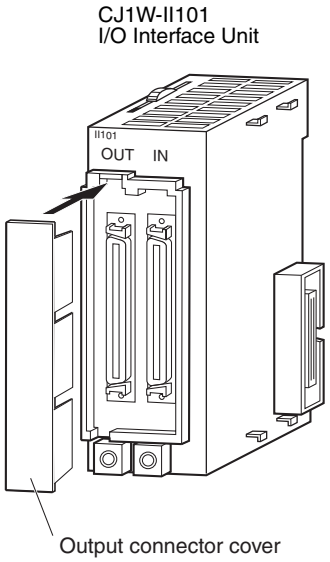

5-3 Wiring

5-3-1 Power Supply Wiring

AC Power Supply Units

● CJ1W-PA205R Power Supply Unit

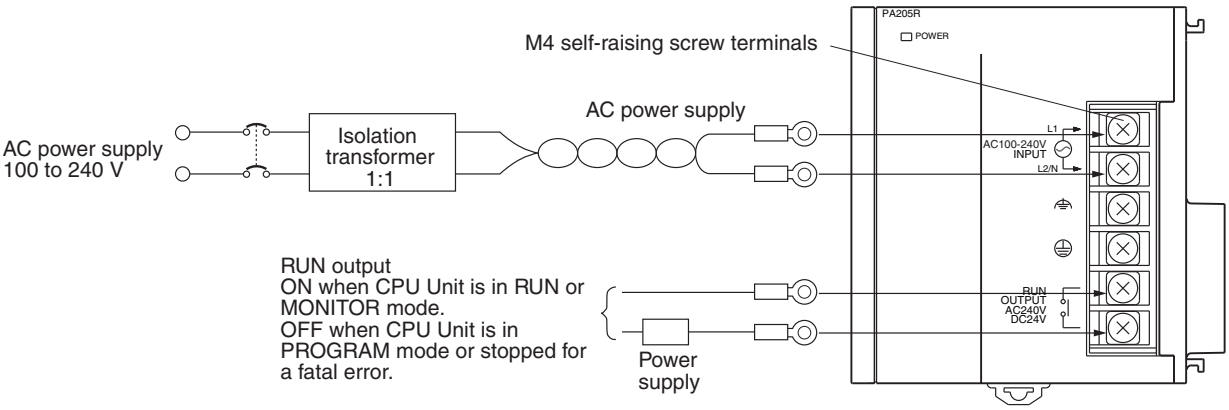

Additional Information

The RUN output function is enabled only when mounted to a CPU Rack.

● AC Power Source

- Supply 100 to 240 VAC.
- Keep voltage fluctuations within the specified range:

Supply voltage	Allowable voltage fluctuations
100 to 240 VAC	85 to 264 VAC

- If one power supply phase of the equipment is grounded, connect the grounded phase side to the L2/N terminal.

● Isolation Transformer

The PLC's internal noise isolation circuits are sufficient to control typical noise in power supply lines, but noise between the PLC and ground can be significantly reduced by connecting a 1-to-1 isolation transformer. Do not ground the secondary coil of the transformer.

● Power Supply Capacity

The power consumption will be 100 VA max. per Rack for the CJ1W-PA205R/PA205C and 50 VA for the CJ1W-PA202, but there will be a surge current determined by power supply specifications when power is turned ON.

● RUN Output

The RUN output is provided only on the CJ1W-PA25R Power Supply Unit. This output is ON whenever the CPU Unit is operating in RUN or MONITOR mode; it is OFF when the CPU Unit is in PROGRAM mode or a fatal error has occurred (including execution of the FALS(007) instruction).

The RUN output can be used to control external systems, such as in an emergency stop circuit that turns off the power supply to external systems when the PLC is not operating. (Refer to *5-1 Fail-safe Circuits* for more details on the emergency stop circuit.)

Item	CJ1W-PA205R
Contact form	SPST-NO
Maximum switching capacity	240 VAC: 2 A for resistive loads 120 VAC: 0.5 A for inductive loads 24 VDC:2 A for resistive loads 24 VDC:2 A for inductive loads

● Crimp Terminals

The terminals on the Power Supply Unit are M4, self-raising terminals with screws.

Precautions for Correct Use

- Use crimp terminals for wiring.
- Do not connect bare stranded wires directly to terminals.
- Tighten the terminal block screws to the torque of 1.2 N·m.
- Use round-type crimp terminals (M4) having the dimensions shown below.
  - Crimp Terminals for AC Power Supplies

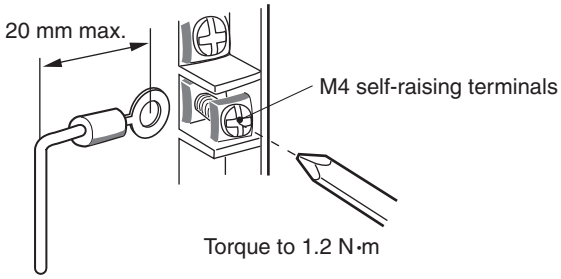

⚠ Caution

Tighten the AC power supply terminal screws to a torque of 1.2 N·m. Loose screws may result in short-circuit, malfunction, or fire.

Precautions for Safe Use

- Supply power to all of the Power Supply Units from the same source.
- Do not remove the protective label from the top of the Unit until wiring has been completed. This label prevents wire strands and other foreign matter from entering the Unit during wiring procedures.
- Do not forget to remove the label from the top of the Power Supply Unit after wiring the Unit. The label will block air circulation needed for cooling.

DC Power Supplies

● CJ1W-PD025 Power Supply Unit

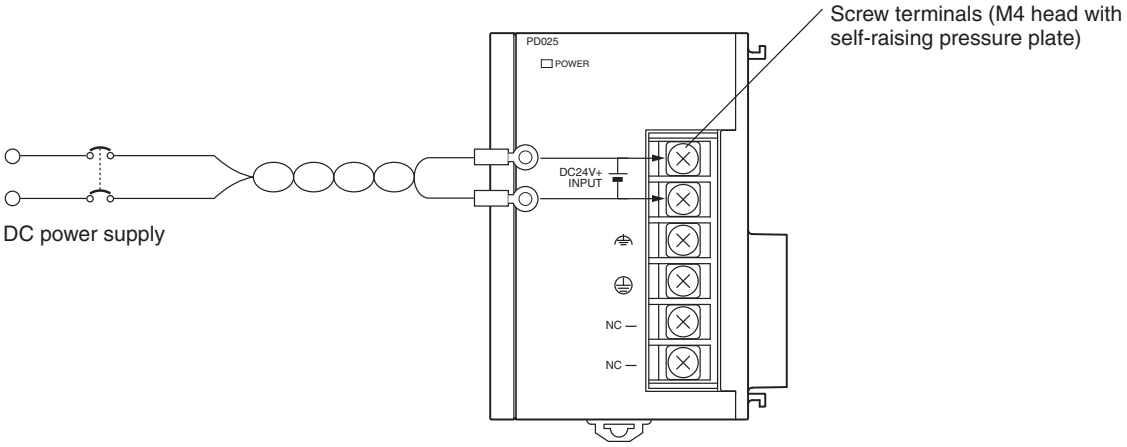

● DC Power Source

Supply 24 VDC. Keep voltage fluctuations within the specified range.

Model	Allowable voltage fluctuation range
CJ1W-PD025	19.2 to 28.8 VDC (±20%)
CJ1W-PD022	21.6 to 26.4 VDC (±10%)

● Power Supply Capacity

The maximum power consumption is 50 W (CJ1W-PD025)/35 W (CJ1W-PD022) per Rack, but there will be a surge current determined by power supply specifications when the power is turned ON.

● Precautions when Using CJ1W-PD022 Non-insulated Power Supply Units

⚠ Caution

When connecting a personal computers or other peripheral devices to a PLC to which a non-insulated Power Supply Unit (CJ1W-PD022) is mounted, either ground the 0 V side of the external power supply or do not ground the external power supply at all ground. A short-circuit will occur in the external power supply if incorrect grounding methods are used. Never ground the 24 V side, as shown below.

Wiring in Which the 24-V Power Supply Will Short

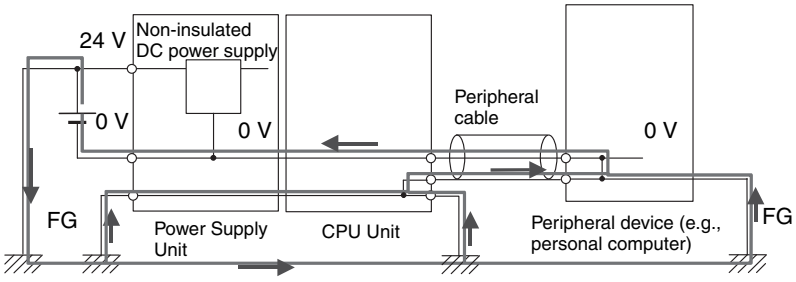

● Crimp Terminals

The terminals on the Power Supply Unit are M4, self-raising terminals with screws.

Precautions for Correct Use

- Use crimp terminals for wiring.
- Do not connect bare stranded wires directly to terminals.
- Tighten the terminal block screws to the torque of 1.2 N·m.
- Use crimp terminals (M4) having the dimensions shown below.

Crimp Terminals for DC Power Supplies

Precautions for Safe Use

- Be sure not to reverse the positive and negative leads when wiring the power supply terminals.
- Supply power to all of the Power Supply Units from the same source.
- Do not remove the protective label from the top of the Unit until wiring has been completed. This label prevents wire strands and other foreign matter from entering the Unit during wiring procedures.
- Do not forget to remove the label from the top of the Power Supply Unit after wiring the Unit. The label will block air circulation needed for cooling.

Grounding

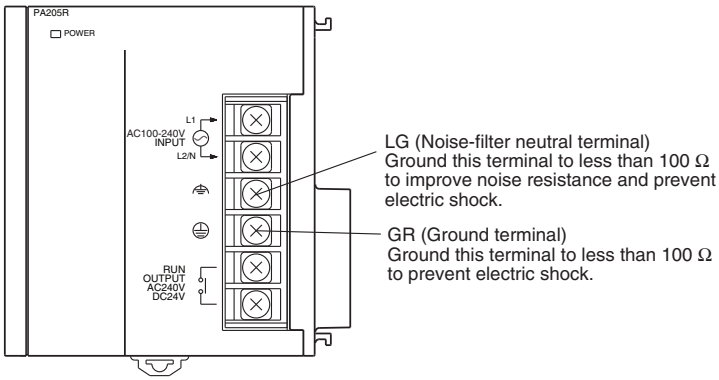

Terminal Name	Name	Symbol	Function
GR	The ground terminal		This terminal is designed to protect against electric shock. Always connect to a ground of 100 Ω or less using a dedicated ground wire (electrical wire of 2 mm^2 or more).
LG	The noise-filtered neutral terminal		This terminal is designed to enhance noise resistance. It prevents noise from entering from external sources and stops noise generated by the device or system itself from damaging other devices or systems. If the noise is excessive and causes malfunctioning, short-circuit the LG and GR terminals and perform grounding with a resistance of 100 Ω or less.

- The internal circuit is shown in the figure below.

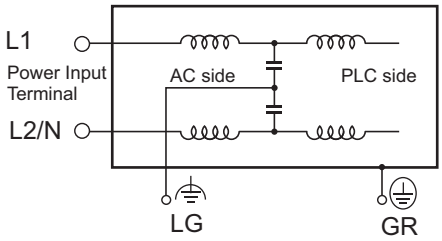

- The ground wire should not be more than 20 m long.
- The CJ-series PLCs are designed to be mounted so that they are isolated (separated) from the mounting surface to protect them from the effects of noise in the installation environment (e.g., the control panel).
- Do not share the PLC's ground with other equipment or ground the PLC to the metal structure of a building.
- If you short-circuit LG and GR, noise may conversely enter the device or system. In this case, do not short-circuit LG and GR.
- When short-circuiting LG and GR, short-circuit them with a dedicated ground wire (electrical wire of 2 mm^2 or more).

Crimp Terminals

The terminals on the Power Supply Unit are M4, self-raising terminals with screws.

Precautions for Correct Use

- Use crimp terminals for wiring.
- Do not connect bare stranded wires directly to terminals.
- Tighten the terminal block screws to the torque of 1.2 N·m.
- Use crimp terminals (M4) having the dimensions shown below.

Crimp Terminals for DC Power Supply

Alarm Output

An alarm output is provided on Power Supply Units with a replacement notification function. Connect the alarm output to a PLC's Input Unit or external LED indicator to enable notification when Power Supply Unit replacement is required.

● CJ1W-PA205C Power Supply Unit

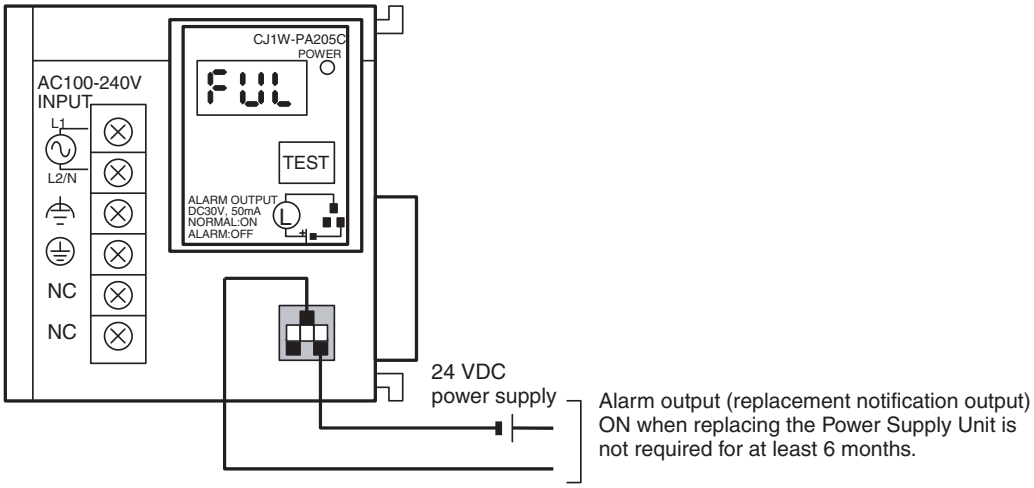

● Output Specifications

- ON (normal): Power Supply Unit replacement not required for at least 6 months.
- OFF: Power Supply Unit replacement required within 6 months.
- Transistor open-collector outputs
- Maximum switching capacity: 30 VDC max., 50 mA max.
- ON: Residual voltage of 2 V max., OFF: Leakage current of 0.1 mA max.

● Wiring

The following wire gauges are recommended.

Recommended wire size	Use	Pushing strength (clamping operation)	Pulling strength (holding force)	Length of stripped section
AWG 22 to 18 (0.32 to 0.82 mm^2)	Connecting to PLC terminal block models	30 N max.	30 N min.	7 to 10 mm
AWG 28 to 24 (0.08 to 0.2 mm^2)	Connecting to PLC connector models		10 N min.	

● PLC Input Unit Wiring Example

Connect the positive terminals of the 24-VDC power supply to the Input Unit common (COM) terminals.

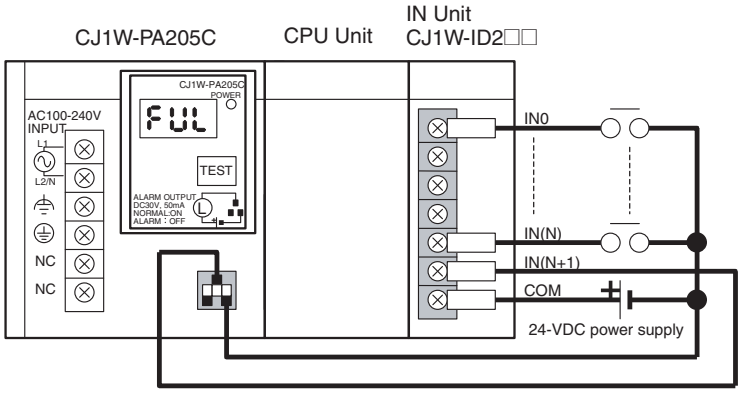

Connect the negative terminal of the 24-VDC power supply to the Input Unit common (COM) terminal.

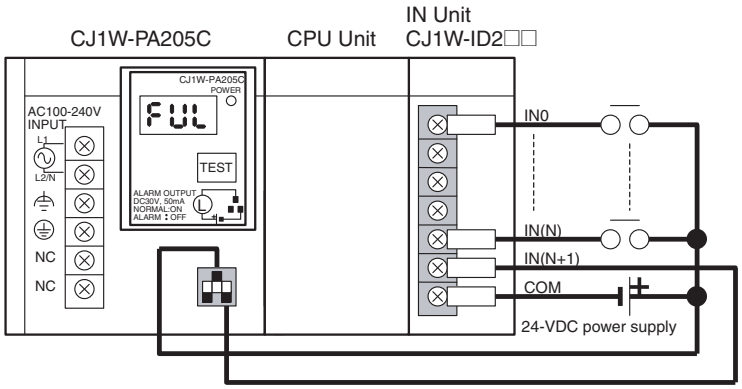

External Display Device Connection Example

The alarm output (replacement notification output) is an NC contact. Therefore, wire the alarm output using an NC contact or other means to turn ON an error indicator or LED display as shown in the following diagram.

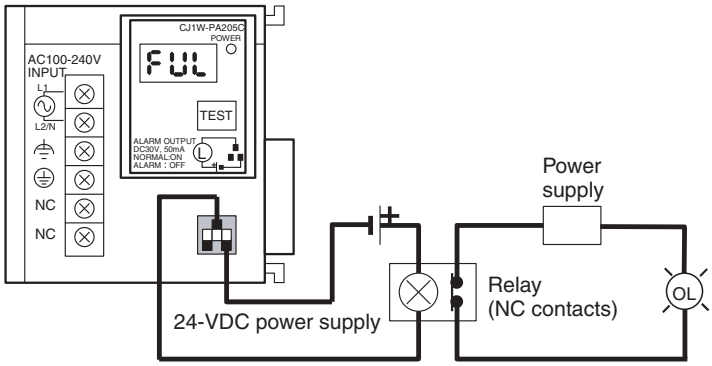

Note The OL display will also light if the PLC's power supply fails.

Precautions for Safe Use

- Separate the alarm output cables from power lines and high-voltage lines.
- Do not apply a voltage or connect a load to the alarm output that exceeds the rated voltage or load.

5-3-2 Wiring CJ-series Basic I/O Units with Terminal Blocks

Precautions for Wiring I/O Units

● I/O Unit Specifications

Double-check the specifications for the I/O Units. To avoid breakdown, damage or fire, observe the following instructions.

- Be sure not to apply a voltage that exceeds the input voltage for Input Units.
- Be sure not to apply a voltage and current that exceed the maximum switching capacity for Output Units.
- When the power supply has positive and negative terminals, be sure to wire them correctly.

● Electric Wires

- The following wire gauges are recommended.

Terminal Block Connector	Wire Size
18-terminal	AWG 22 to 18 (0.32 to 0.82 mm^2)

- The current capacity of electric wire depends on factors such as the ambient temperature and insulation thickness as well as the gauge of the conductor.

● Crimp Terminals

The terminals on the I/O Unit are M3, self-raising terminals with screws.

Precautions for Correct Use

- Use crimp terminals for wiring.
- Do not connect bare stranded wires directly to terminals.
- Tighten the terminal block screws to the torque of 0.5 N·m.
- Use crimp terminals (M3) having the dimensions shown below.

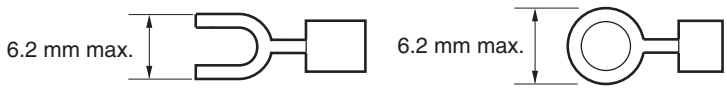

Wiring

- Make sure that all Units are connected properly.
- Wire the Units so that they can be easily replaced.
- Make sure that the I/O indicators are not covered by the wiring.
- Do not place the wiring for I/O Units in the same duct or raceway as power lines. Inductive noise can cause errors in operation.
- Tighten the terminal screws to the torque of 0.5 N·m.

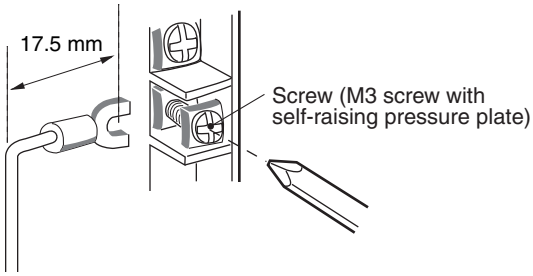

Terminal Blocks

- The I/O Units are equipped with removable terminal blocks. The lead wires do not have to be removed from the terminal block to remove it from an I/O Unit.
- After you complete wiring, check to see if the terminal block is securely locked.

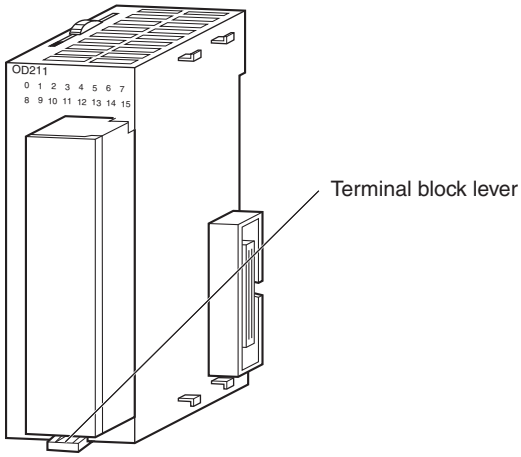

CJ-series Basic I/O Unit

5-3-3 Wiring Basic I/O Units with Connectors

This section describes wiring for CJ-series Basic I/O Units with connectors (32- and 64-point Units). Depending on the connector, the following methods are used to connect these Units to external I/O devices.

- Use an OMRON Connecting Cable (equipped with a special connector) to connect to a Terminal Block or Relay Terminal.
- Use a special connector and user-provided cable.

Precautions for Safe Use

- Do not apply voltages to the Input Units in excess of the rated input voltage range.
- Do not apply voltages and currents to the Output Units in excess of the maximum switching capacity.
- When the power supply has positive and negative terminals, be sure to wire them correctly. Loads connected to Output Units may malfunction if the polarity is reversed.
- Use reinforced insulation or double insulation on the DC power supply connected to DC I/O Units when required by EC Directives (low voltage).
- When connecting the connector to the I/O Unit, tighten the connector screws to a torque of 0.2 N·m.
- Turn ON the power after checking the connector's wiring.
- Do not pull the cable. Doing so will damage the cable.
- Bending the cable too sharply can damage or break wiring in the cable.

Additional Information

CJ-series Basic I/O Units with 32 or 64 points and Fujitsu/OTAX connectors have the same connector pin allocations as the C200H High-density I/O Units and CS-series I/O Units with connectors to make them compatible.

Connecting to a Connector-Terminal Block Conversion Unit or I/O Relay Terminal

For details on using OMRON Connecting Cables equipped with special connectors to connect Basic I/O Units with connectors to OMRON Connector-Terminal Block Conversion Units or I/O Relay Terminals, refer to *A-1-4 Connecting Connector-Terminal Block Conversion Units and I/O Relay Terminals*.

Using User-made Cables with Connector

● Available Connectors

Use the following connectors when assembling a connector and cable.

CJ-series 32- and 64-point Basic I/O Units with Fujitsu/OTAX Connectors

Applicable Units

Model	Specifications	Pins
CJ1W-ID231	Input Unit, 24 VDC, 32 inputs	40
CJ1W-ID261	Input Unit, 24 VDC, 64 inputs	
CJ1W-OD231	Transistor Output Unit with Sinking Outputs, 32 outputs	
CJ1W-OD261	Transistor Output Unit with Sinking Outputs, 64 outputs	
CJ1W-MD261	24-VDC Input/Transistor Output Units, 32 Inputs, 32 Outputs	
CJ1W-MD231	24-VDC Input/Transistor Output Units, 16 Inputs, 16 Outputs	24

Applicable Cable-side Connectors

Connection	Pins	OMRON set	Fujitsu parts	OTAX parts
Solder-type	40	C500-CE404	Socket: FCN-361J040-AU Connector cover: FCN-360C040-J2	Socket: N361J040AU Connector cover: N360C040J2
	24	C500-CE241	Socket: FCN-361J024-AU Connector cover: FCN-360C024-J2	Socket: N361J024AU Connector cover: N360C024J2
Crimped	40	C500-CE405	Socket: FCN-363J040 Connector cover: FCN-360C040-J2 Contacts: FCN-363J-AU	Socket: N363J040 Connector cover: N360C040J2 Contacts: N363JAU
	24	C500-CE242	Socket: FCN-363J024 Connector cover: FCN-360C024-J2 Contacts: FCN-363J-AU	Socket: N363J024 Connector cover: N360C024J2 Contacts: N363JAU
Pressure-welded	40	C500-CE403	FCN-367J040-AU/F	N367J040AUF
	24	C500-CE243	FCN-367J024-AU/F	N367J024AUF

CJ-series 32- and 64-point Basic I/O Units with MIL Connectors

Applicable Units

Model	Specifications	Pins
CJ1W-ID232	Input Unit, 24 VDC, 32 inputs	40
CJ1W-ID233		
CJ1W-ID262	Input Unit, 24 VDC, 64 inputs	
CJ1W-OD232	Transistor Output Unit with sourcing outputs, 32 outputs	
CJ1W-OD262	Transistor Output Unit with sourcing outputs, 64 outputs	
CJ1W-OD233	Transistor Output Unit with sinking outputs, 32 outputs	
CJ1W-OD234		
CJ1W-OD263	Transistor Output Unit with sinking outputs, 64 outputs	
CJ1W-MD263	24-VDC Input/Transistor Output Units, 32 inputs, 32 outputs	
CJ1W-MD563	TTL Input/TTL Output Units, 32 inputs, 32 outputs	
CJ1W-MD232	24-VDC Input/Transistor Output Units, 16 inputs, 16 outputs	20
CJ1W-MD233	24-VDC Input/Transistor Output Units, 16 inputs, 16 outputs	

Applicable Cable-side Connectors

Connection	Pins	OMRON set	Fujikura
Pressure-welded	40	XG4M-4030-T	FRC5-A040-3TOS
	20	XG4M-2030-T	FRC5-A020-3TOS

● Wire Size

We recommend using cable with wire gauges of AWG 24 or AWG 28 (0.2 mm^2 to 0.08 mm^2). Use cable with external wire diameters of 1.61 mm max.

● Wiring Procedure

The following wiring procedure is an example for Fujitsu/OTAX connectors.

1 Check that each Unit is installed securely.

Precautions for Correct Use

Do not force the cables.

2 Do not remove the protective label from the top of the Unit until wiring has been completed. This label prevents wire strands and other foreign matter from entering the Unit during wiring. (Remove the label after wiring has been completed to allow air circulation needed for cooling.)

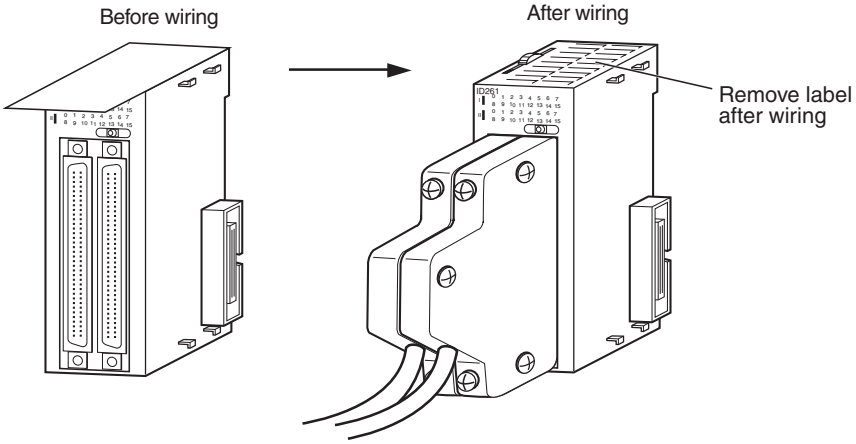

3 When solder-type connectors are being used, be sure not to accidentally short adjacent terminals. Cover the solder joint with heat-shrink tubing.

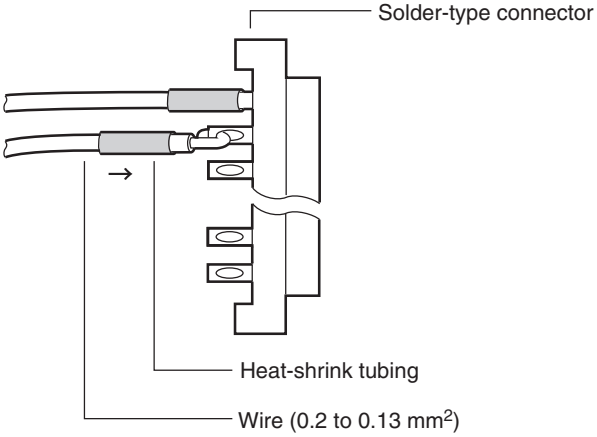

Precautions for Safe Use

Double-check to make sure that the Output Unit's power supply leads have not been reversed. If the leads are reversed, the Unit's internal fuse will blow and the Unit will not operate.

4 Assemble the connector (purchased separately).

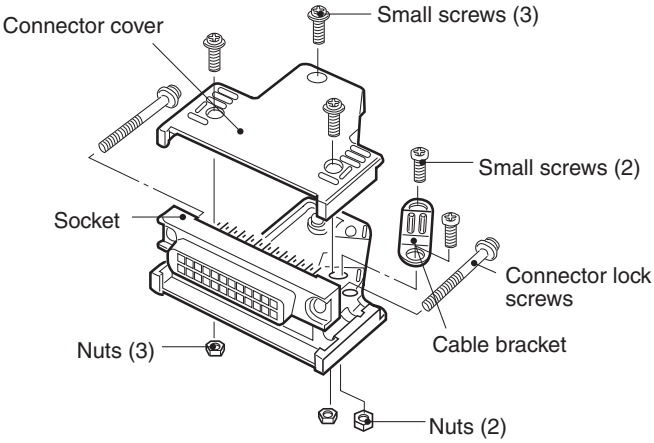

5 Insert the wired connector.

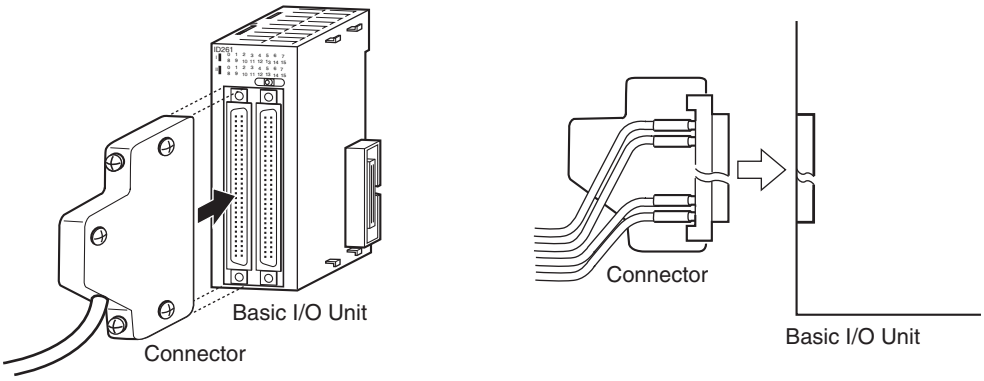

6 Remove the protective label after wiring has been completed to allow air circulation needed for cooling.

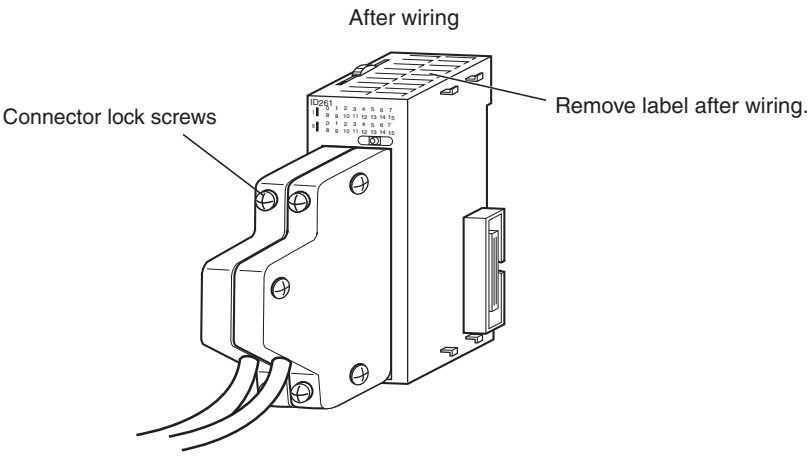

Tighten the connector lock screws to a torque of 0.2 N·m.

5-3-4 Connecting to Connector-Terminal Block Conversion Units or I/O Relay Terminals

OMRON Connecting Cable can be used to connect Basic I/O Units with Connectors to OMRON Connector-Terminal Block Conversion Units or to OMRON I/O Relay Terminals. For details, refer to *A-1-4 Connecting Connector-Terminal Block Conversion Units and I/O Relay Terminals*.

● Connection Examples

Connector-Terminal Block Conversion Unit

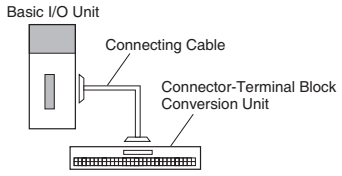

I/O Relay Terminals

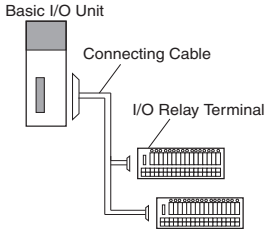

5-3-5 Connecting Pulse I/O Modules to External I/O Devices

Depending on the connector, the following methods are used to connect these Pulse I/O Modules to external I/O devices.

- Use an OMRON Cable with Connectors to connect to a Connector-Terminal Block Conversion Unit or Servo Relay Unit.
- Make a cable with an MIL Connector (including using Servo General-purpose Control Cables).

● Using OMRON Cables with Connectors to Connect to Connector-Terminal Block Conversion Units or Servo Relay Units

For details on using OMRON Cables with Connectors to connect Pulse I/O Modules to OMRON Connector-Terminal Block Conversion Units or Servo Relay Units, refer to *Section 3 I/O Specifications and Wiring for Pulse I/O Modules* in the *CJ2M/CJ3M CPU Unit Pulse I/O Module User's Manual* (W486).

Connection Example for Connector-Terminal Block Conversion Unit

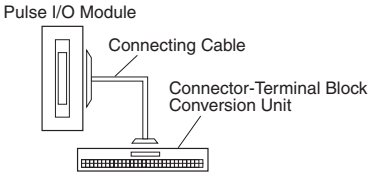

Connection Example for Servo Relay Unit

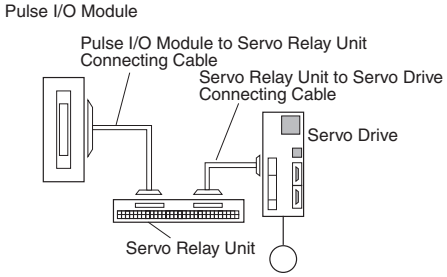

● User-made Cables with Connectors

Applicable Pulse I/O Modules

Model	Specifications	Pins
CJ2M-MD211	Sinking outputs, MIL connector, 10 inputs, 6 outputs	40
CJ2M-MD212	Sourcing outputs, MIL connector, 10 inputs, 6 outputs	40

Applicable Cable-side Connectors

Connection method	Pins	OMRON set	Fujikura
Pressure-welded	40	XG4M-4030-T	FRC5-A040-3TOS

5-3-6 Connecting I/O Devices

Input Devices

Use the following information for reference when selecting or connecting input devices.

● DC Input Units

The following types of DC input devices can be connected.

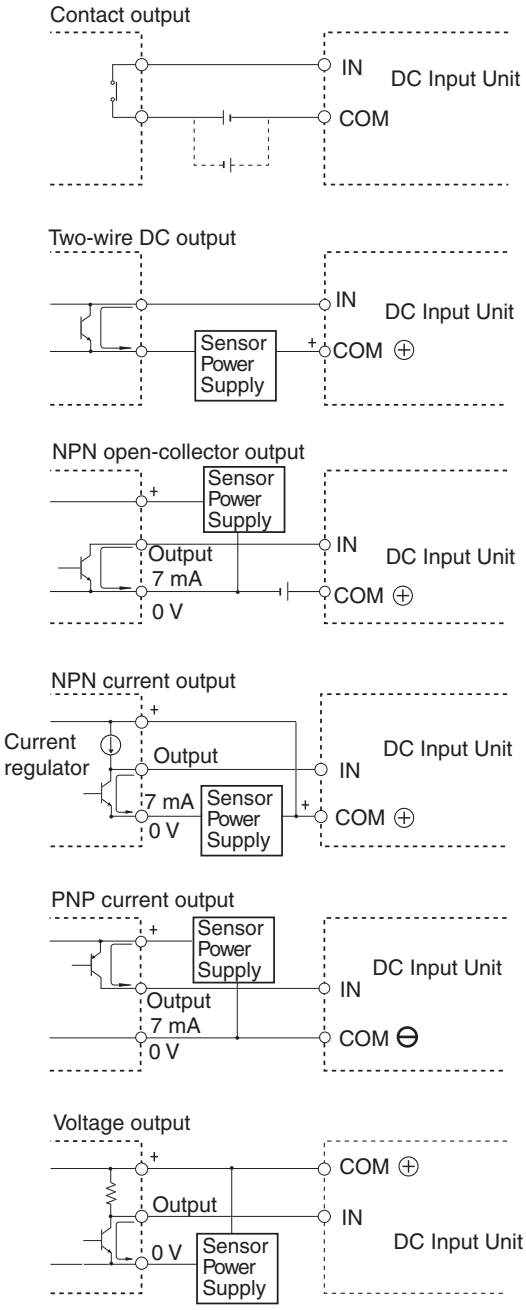

- The circuit below should NOT be used for I/O devices having a voltage output. Inputs do not turn ON.

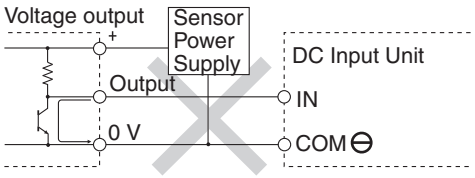

AC Input Units

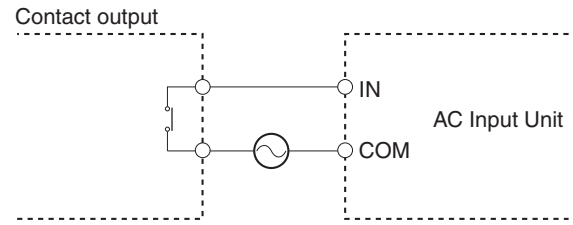

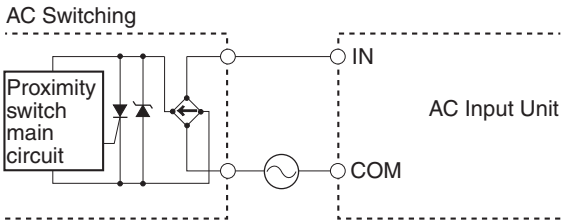

Precautions for Safe Use

When using a reed switch as the input contact for an AC Input Unit, use a switch with an allowable current of 1 A or greater. If reed switches with smaller allowable currents are used, the contacts may fuse due to surge currents.

Precautions when Connecting a Two-wire DC Sensor

When using a two-wire sensor with a 12-VDC or 24-VDC input device, check that the following conditions have been met. Failure to meet these conditions may result in operating errors.

- Relation between voltage when the PLC is ON and the sensor residual voltage:
  $V_{ON} \leq V_{CC} - V_R$
- Relation between voltage when the PLC is ON and sensor control output (load current):
  I_{OUT} (min) $\leq I_{ON} \leq I_{OUT}$ (max.)
  $I_{ON} = (V_{CC} - V_R - 1.5$ [PLC internal residual voltage]$)/R_{IN}$

  When I_{ON} is smaller than I_{OUT} (min), connect a bleeder resistor R. The bleeder resistor constant can be calculated as follows:
  $R \leq (V_{CC} - V_R)/(I_{OUT}$ (min.) $- I_{ON})$
  Power $W \geq (V_{CC} - V_R)^2/R \times 4$ [allowable margin]
  V_{CC}: Power voltage
  V_R: Sensor output residual current
  I_{ON}: PLC ON current
  I_{OUT}: Sensor control current (load current)
  R_{IN}: PLC input impedance

- Relation between current when the PLC is OFF and sensor leakage current:
  $I_{OFF} \geq I_{leak}$
  Connect a bleeder resistor if I_{leak} is greater than I_{OFF}. Use the following equation to calculate the bleeder resistance constant.
  $R \leq (R_{IN} \times V_{OFF})/(I_{leak} \times R_{IN} - V_{OFF})$
  Power $W \geq (V_{CC} - V_R)^2/R \times 4$ [allowable margin]

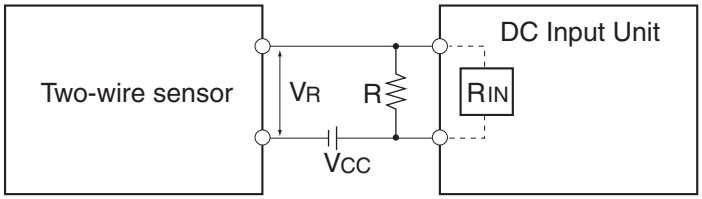

V_{CC}: Power voltage
V_{ON}: PLC ON voltage
V_{OFF}: PLC OFF voltage
I_{ON}: PLC ON current
I_{OFF}: PLC OFF current
R_{IN}: PLC input impedance

V_R: Sensor output residual current
I_{OUT}: Sensor control current (load current)
I_{leak}: Sensor leakage current
R: Bleeder resistance

- Precautions on Sensor Surge Current
  An incorrect input may occur if a sensor is turned ON after the PLC has started up to the point where inputs are possible. Determine the time required for sensor operation to stabilize after the sensor is turned ON and take appropriate measures, such as inserting into the program a timer delay after turning ON the sensor.

Example

In this example, the sensor's power supply voltage is used as the input to CIO 0.00 and a 100-ms timer delay (the time required for an OMRON Proximity Sensor to stabilize) is created in the program. After the Completion Flag for the timer turns ON, the sensor input on CIO 0.01 will cause output bit CIO 1.00 to turn ON.

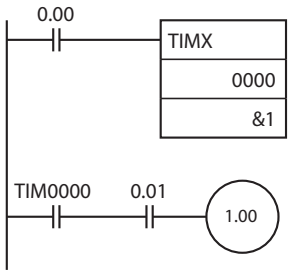

Output Wiring Precautions

Output Short-circuit Protection

If a load connected to the output terminals is short-circuited, output components and the printed circuit boards may be damaged. To guard against this, incorporate a fuse in the external circuit. Use a fuse with a capacity of about twice the rated output.

Transistor Output Residual Voltage

A TTL circuit cannot be connected directly to a transistor output because of the transistor's residual voltage. It is necessary to connect a pull-up resistor and a CMOS IC between the two.

Output Surge Current

When connecting a transistor or triac output to an output device having a high surge current (such as an incandescent lamp), steps must be taken to avoid damage to the transistor or triac. Use either of the following methods to reduce the surge current.

Method 1

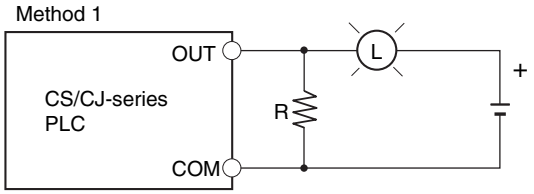

Add a resistor that draws about 1/3 of the current consumed by the bulb.

Method 2

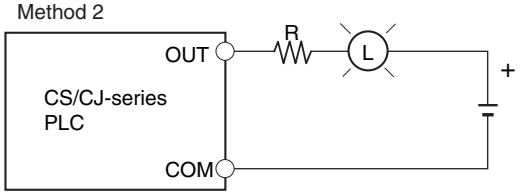

Add a control resistor as shown in the following diagram.

5-3-7 Wiring of Ethernet Cable

Precautions

Observe the following precautions when using the built-in EtherNet/IP port on the CPU Unit.

Basic Installation Precautions

- Take the greatest care when installing the Ethernet System, being sure to follow ISO 8802-3 specifications. You must obtain a copy of these specifications and be sure you understand them before attempting to install an Ethernet System.
- Unless you are already experienced in installing communications systems, we strongly recommend that you employ a professional to install your system.
- Do not install Ethernet equipment near sources of noise. If a noisy environment is unavoidable, take adequate measures against noise interference, such as installing network components in grounded metal cases or using optical cable in the system.
- When installing an EtherNet/IP network that combines an information system with the control system, and the communications load may be heavy due to tag data links, we recommend configuring the network so that the load does not affect communications. For example, install the tag data links in a segment that is separate from the information network.

Precautions on Laying Twisted-pair Cable

- Between EtherNet/IP Unit (built-in port) and switching hub
  When connecting the shield to the connector hod, connect both ends or only the switching hub side.
  - 10BASE-T or 100BASE-TX
    When connecting the cable shield to each connector hood, connect by either of (1) or (2) below.

    (1) Connecting both ends

    Connect the shielding at both ends of the cable to each connector hood.

    (2) Connecting only the switching hub side

    Connect the shielding to the connector hood on only the switching hub side at one end of the cable.

Additional Information

Depending on how the shielding is handled or how devices are grounded, ground loops can form, which can reduce noise tolerance or sometimes damage devices.

When the transmission speed is 100 Mbps or less, connecting only the switching hub side (2) may improve performance more than connecting both ends (1).

- Between switching hubs
  Regardless of the transmission speed used, when laying a network between switching hubs, check with the switching hub manufacturer regarding routing of cables, including whether to connect the cable shielding to each connector hood.

Ethernet Connectors

The following standards and specifications apply to the connectors for the Ethernet twisted-pair cable.

- Electrical specifications: Conform to IEEE802.3 standards.
- Connector structure: RJ45 8-pin Modular Connector (Conforms to ISO 8877)

8pin
•
•
1pin

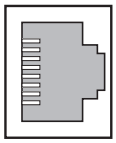

Connector pin	Signal name	Abbr.	Signal direction
1	Transmission data +	TD+	Output
2	Transmission data –	TD–	Output
3	Reception data +	RD+	Input
4	Not used.	---	---
5	Not used.	---	---
6	Reception data –	RD–	Input
7	Not used.	---	---
8	Not used.	---	---
Hood	Frame ground	FG	---

Connecting the Cable

Precautions for Correct Use

- Turn OFF the PLC's power supply before connecting or disconnecting twisted-pair cable.
- Allow extra space for the bending radius of the twisted-pair cable. The required space depends on the communications cable and connector that are used. Consult with the manufacturer or sales agent.

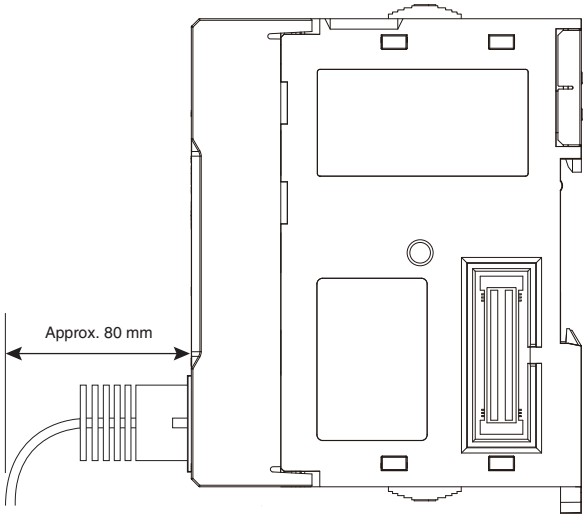

1 Lay the twisted-pair cable.

2 Connect the cable to the Ethernet switch. Be sure to press in the cable until it locks into place.

3 Connect the twisted-pair cable to the connector on the built-in EtherNet/IP port at the CPU Unit. Be sure to press the connectors at both the Ethernet switch end and Ethernet end until they lock into place.

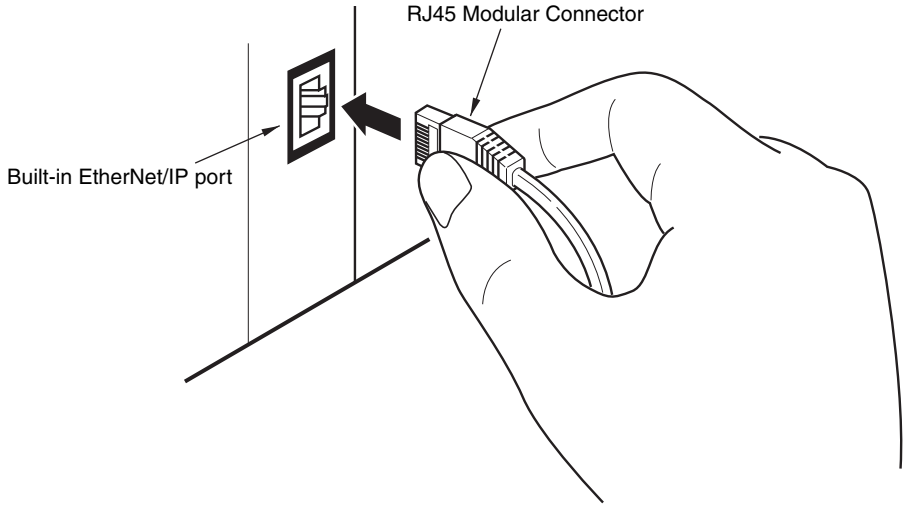

5-4 Control Panel Installation

To ensure system reliability and safety, the system must be designed and configured according to the installation environment (temperature, humidity, vibration, shock, corrosive gases, overcurrent, noise, etc.).

Be sure to use a material with high flame retardancy, such as steel plate, for the control panel. Do not use materials with low flame retardancy, such as resin, or materials that provide no electrical shielding effect.

5-4-1 Temperature

Panels have been reduced in size due to space-saving and miniaturization in devices and systems, and the temperature inside the panel may be at least 10 to 15°C higher than outside the panel. Implement the following measures against overheating at the installation site and in the panel, and allow a sufficient margin for the temperature.

High Temperatures

Use the following cooling methods as required, taking into account the ambient temperature and the amount of heating inside the panel.

● Natural Cooling

Natural cooling relies on natural ventilation through slits in the panel, rather than using cooling devices such as fans or coolers. When using this method, observe the following points.

- Do not install the PLC at the top of the panel, where hot air tends to stagnate.
- To provide ventilation space above and below the PLC, leave sufficient distance from other devices, wiring ducts, etc.
- Do not mount the Units in the wrong direction (e.g., vertically or upside down). Doing so may cause abnormal heating in the PLC.
- Do not install heat-generating equipment, such as heaters, transformers, and devices with high resistance, directly above the panel.
- Do not install the PLC in a location exposed to direct sunlight.

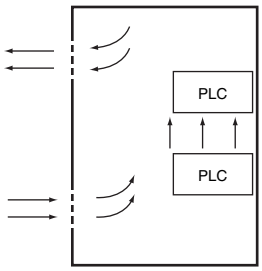

Natural Cooling

- **Forced Ventilation (by Fan at Top of Panel)**

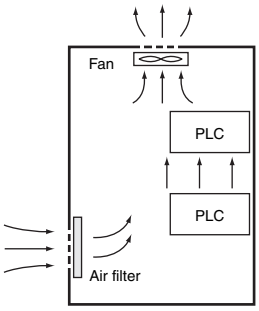

Forced Ventilation Method

- **Forced Air Circulation (by Fan in Closed Panel)**

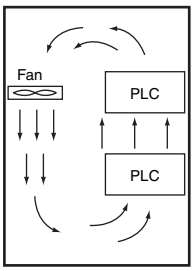

Forced Air Circulation

- **Room Cooling (Cooling the Entire Room Where the Control Panel Is Located)**

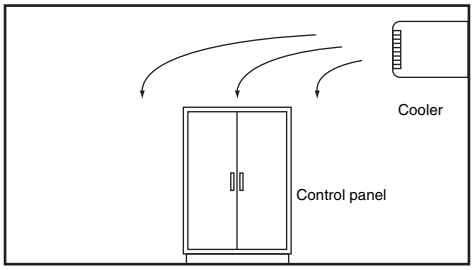

Room Cooling

Low Temperatures

The PLC will not start normally if the temperature is below 0°C when the power is turned ON. Maintain an air temperature of at least approximately 5°C inside the panel, by implementing measures such as installing a low-capacity space heater in the panel. Alternatively, leave the PLC power ON to keep the PLC warm.

5-4-2 Humidity

Rapid temperature changes can cause condensation to occur, resulting in malfunctioning due to short-circuiting. When there is a possibility of this occurring, take measures against condensation, such as leaving the PLC power ON at night or installing a heater in the control panel to keep it warmer.

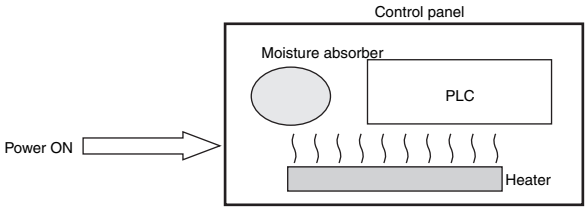

Examples of Measures against Condensation

5-4-3 Vibration and Shock

The PLC is tested for conformity with the sine wave vibration test method (IEC 60068-2-6) and the shock test method (IEC 60068-2-27) of the Environmental Testing for Electrotechnical Products. It is designed so that malfunctioning will not occur within the specifications for vibration and shock. If, however, the PLC is to be used in a location in which it will be directly subjected to regular vibration or shock, then implement the following countermeasures:

- Either separate the control panel from the source of the vibration or shock, or secure the PLC and the panel with rubber padding to prevent vibration.
- Make the building or the floor vibration-resistant.
- To prevent shock during operation to devices in the panel, such as electromagnetic contactors, secure either the source of the shock or the PLC with rubber padding.

5-4-4 Atmosphere

Using the PLC in any of the following locations can cause defective contact with connectors and corrosion of components. Implement countermeasures such as purging the air as required.

- In locations exposed to dust, dirt, salt, metal filings, soot, or organic solvents, use a panel with an air-tight structure. Be careful of temperature increases inside the panel.
- In locations exposed to corrosive gas, purge the air inside the panel to clear the gas and then pressurize the inside of the panel to prevent gas from entering from outside.
- In locations where flammable gas is present, either use an explosion-protected construction or do not use the PLC.

5-4-5 Electrical Environment

When installing or wiring devices, make sure that there will be no danger to people and that noise will not interfere with electrical signals.

PLC Installation Location

Install the PLC as far away as possible from high-voltage (600 V or higher) and power devices to ensure safe operation and maintenance.

Example of Recommended Equipment Arrangement

OK

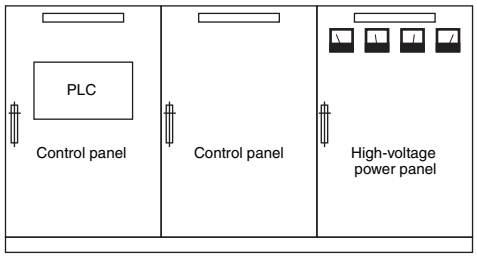

Example of Poor Equipment Arrangement

NG

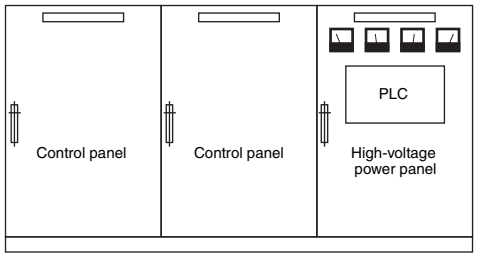

Examples of Equipment Arrangement in Panel with High-voltage Devices

Arrangement of PLC and Units

Observe the following points.

- Place a Unit that does not generate much noise next to the CPU Unit, such as an Input Unit or Communications Unit.
- The coils and contacts in electromagnetic contactors and relays in an external circuit are sources of noise. Locate them at least 100 mm away from the PLC.

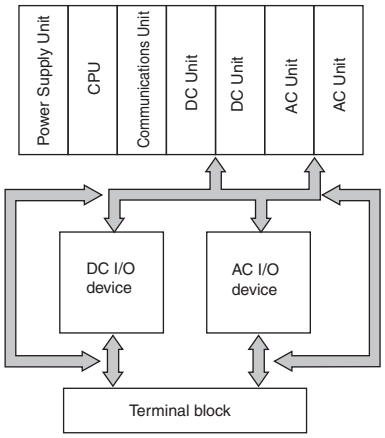

Example of Arrangement in Panel

Wire Layout for the Power Supply System

Observe the following points when wiring the power supply system.

- Separate the PLC power supply from the I/O device power supply and install a noise filter near the PLC power supply feed section.
- Use an isolating transformer to significantly reduce noise between the PLC and the ground. Install the isolating transformer between the PLC power supply and the noise filter, and do not ground the secondary coil of the transformer.
- Keep the wiring between the transformer and the PLC as short as possible, twist the wires well, and keep the wiring separate from high-voltage and power lines.

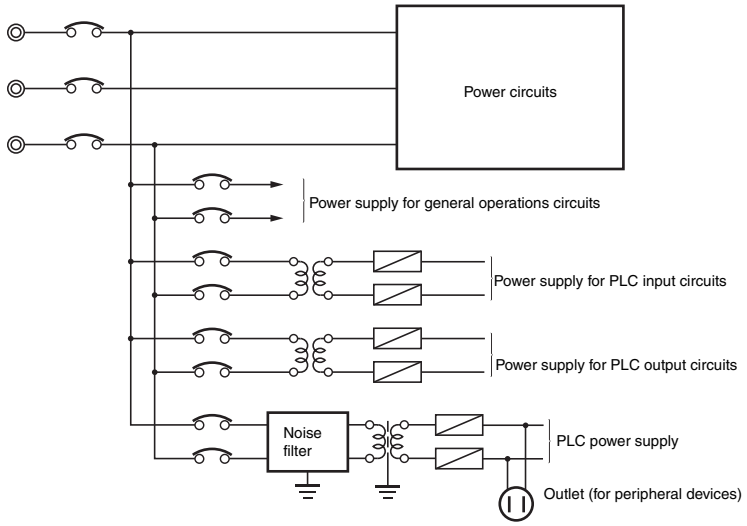

Power Supply System Diagram

Wiring External I/O Signal Lines

Observe the following points when wiring external I/O signal lines.

- To absorb reverse electromotive force when an inductive load is connected to an output signal, connect a surge suppressor near the inductive load in an AC circuit, and connect a diode near the inductive load in a DC circuit.

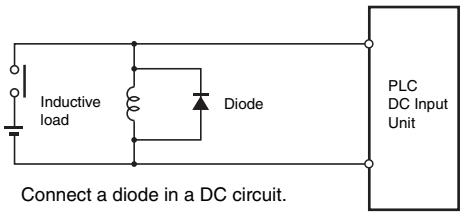

Input Signal Noise Countermeasures

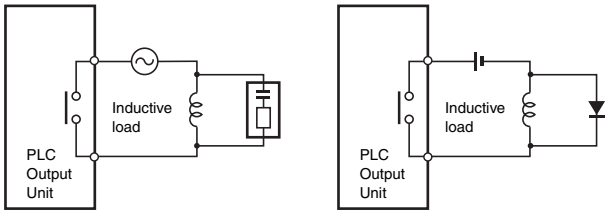

Connect a surge suppressor in an AC circuit. Connect a diode in a DC circuit.

Output Signal Noise Countermeasures

- Never bundle output signal lines with high-voltage or power lines, and do not route them in close proximity or parallel to such lines. If output signal lines must be routed in close proximity to such lines, place them in separate ducts or conduits and be sure to ground the ducts or conduits.

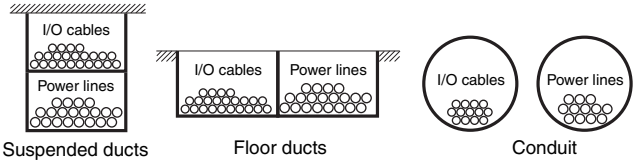

I/O Cable Arrangement

- If the signal lines and power lines cannot be routed in separate ducts, use shielded cable. Connect the shield to the ground terminal at the PLC, and leave it unconnected at the input device.

- Wire the lines so that common impedance does not occur. Such wiring will increase the number of wires, so use common return circuits. Use thick wires with sufficient allowance for the return circuits, and bundle them with lines of the same signal level.
- For long I/O lines, wire the input and output signal lines separately.
- Use twisted-pair wires for pilot lamps (and particularly lamps with filaments).
- Use countermeasures, such as CR surge absorbers and diodes, for input device and output load device noise sources, as required.

External Wiring

Wiring, and noise countermeasures in particular, are based on experience, and it is necessary to closely manage wiring based on experience and information in the manuals.

● Wiring Routes

Each of the following combinations include different signal types, properties, or levels. They will cause the signal-to-noise ratio to drop due to factors such as electrical induction. As a general rule when wiring, either use separate cables or separate wiring routes for these items. Future maintenance operations and changes to the system will also be made easier by carefully organizing the wiring from the start.

- Power lines and signal lines
- Input signals and output signals
- Analog signals and digital signals
- High-level signals and low-level signals
- Communications lines and power lines
- DC signals and AC signals
- High-frequency devices (such as Inverters) and signal lines (communications)

Wiring Methods

Observe the following points when wiring power supply and signal cables.

- When routing signal cables with differing characteristics through the same duct, always keep them separated.
- As much as possible, avoid routing multiple power supply lines through the same duct. If it cannot be avoided, then construct a partition between them in the duct and ground the partition.

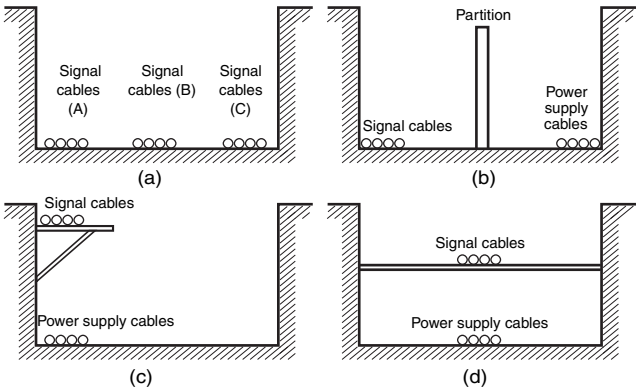

Partitioning Methods for Signal and Power Supply Cables

- To avoid overheating the conduits when using conduits for wiring, do not place wires for a single circuit in separate conduits.

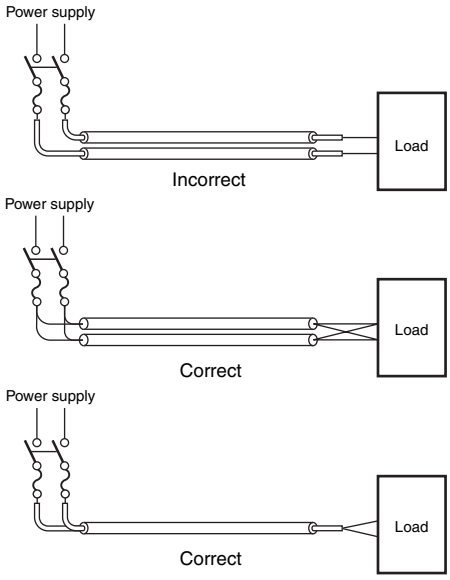

Parallel Wiring (Single Phase)

- Power cables and signal cables adversely affect each other. Do not wire them in parallel.
- Noise induction may occur if the PLC is installed in a panel that includes high-voltage devices. Whenever possible, wire and install them separately. (Refer to *PLC Installation Location* on page 44.)
- Either install the PLC a minimum of 200 mm from high-voltage lines or power lines, or place the high-voltage lines or power lines in metal tubing and completely ground the metal tubing to 100 Ω or less.

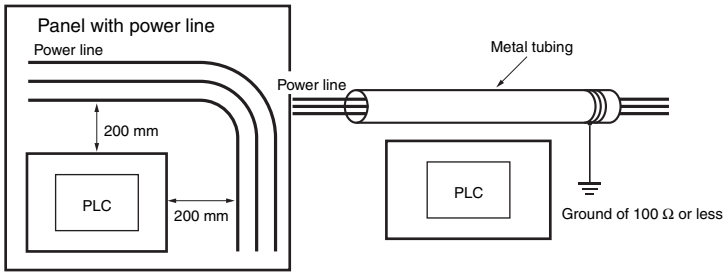

Example: Separating PLC from Power Lines

Other Precautions

- Basic I/O Units have both plus and minus commons, so pay attention to the polarity when wiring.
- Optical fiber cable looks like ordinary communications cable or power cable, but internally it consists of fibers, tension members, other protective materials. It must be handled with care. In particular, optical fiber cable must be installed according to prescribed methods and standards. Do not subject optical fiber cable to severe tensile shock, excessive bending, twisting, or excessive constriction. For details on wiring optical fiber cables, refer to the following manuals.
  - SYSMAC H-PCF Optical Fiber Cables Installation Guide (Cat. No. W156)
  - Optical Ring Controller Link Units Operation Manual (Cat. No. W370)

5-4-6 Grounding

Grounding has the following two purposes.

- Protective Grounding
  Protective grounding is done to ensure safety. It is intended to prevent electrical shock by grounding the electrical potential that is generated by factors such as leakage, induction, or failure.
- Functional Grounding
  Functional grounding is done to protect device and system functions, including prevention of noise from external sources, or prevention of noise from devices or equipment that could have harmful effects on other devices or equipment.

Grounding requirements sometimes depend on the situation, based on experimentation. It is important to sufficiently check the particular circumstances before grounding.

Grounding Methods and Precautions

● Principles of One-point Grounding

For devices to operate properly, the reference potential between the devices must be stabilized. Use one-point grounding so that noise current does not flow to ground lines between the devices.

● Whenever possible, use an independent ground (with the ground pole separated by a minimum of 10 m from any other ground pole).

- Ground to 100 Ω or less, and if possible use a separate ground from those of other devices. (Refer to figure (a) in the diagram below.)
- If using an independent ground is not possible, then use a common ground as shown in figure (b). Connect to the ground pole of the other device.
- Never connect to the same ground as a device that draws a large amount of power, such as a motor or inverter. Ground the devices separately to avoid mutually adverse influences.
- To prevent electrical shock, do not connect to ground poles (especially steel frames) to which multiple devices are connected.
- Use a ground pole as close to the PLC as possible and keep the ground line as short as possible.

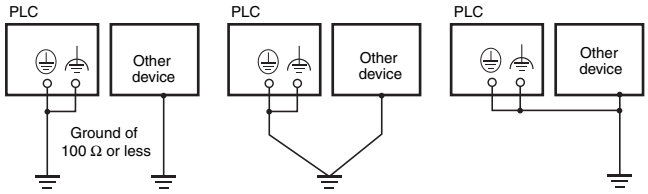

Independent grounds: Best | **Common ground: Acceptable** | **Common ground: Incorrect**

Grounding Methods

Precautions when Grounding

- If the same ground is used for both the signal lines and the enclosure, isolate the channel base (a grounded metal plate inside a control panel) with an insulating material

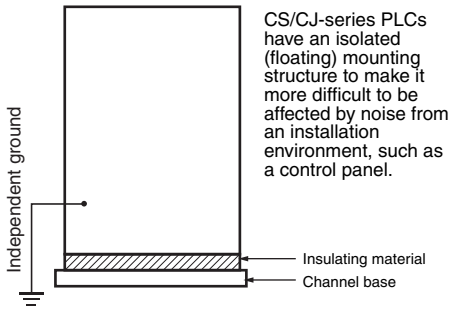

Example: Insulating and Grounding an Enclosure

- To prevent influence from leakage current from other electrical devices, electrically isolate the panel in which the PLC is housed from other devices.
- If high-frequency equipment is present, then ground not only the high-frequency equipment but also the panel itself in which the PLC is housed.
- As shown in the following diagram, when using shielded cable for I/O wiring, connect the shield near the PLC to the enclosure ground terminal. Follow the instructions in the Communications Unit manual for preparing shielded communications cable.

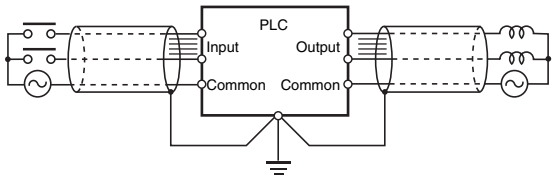

Shielded Cable Ground

Grounding for AC Power Supply Units

When wiring to an AC Power Supply Unit, if one power supply phase of the equipment is grounded, always connect the grounded phase to the L2/N terminal.

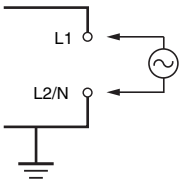

6

Troubleshooting

This section describes how to troubleshoot problems that may occur with a CJ3 PLC.

6-1 CPU Unit Errors 6-2

6-1-1 Errors and Remedies 6-2

6-1-2 Checking Errors 6-2

6-1-3 Checking Detailed Status 6-3

6-1-4 Reading Error Log Information 6-3

6-1-5 I/O Table Verification 6-5

6-1-6 Types of Errors 6-6

6-1-7 Handling Errors 6-7

6-2 Troubleshooting Built-in EtherNet/IP Port Errors 6-23

6-2-1 Checking Built-in EtherNet/IP Port Error Status 6-23

6-2-2 Checking Error Status at the EtherNet/IP Port Seven-segment Display 6-24

6-3 Non-CPU Unit Errors and Remedies 6-26

6-3-1 Error Causes and Remedies 6-26

6-1 CPU Unit Errors

6-1-1 Errors and Remedies

Use the following procedure when an error occurs.

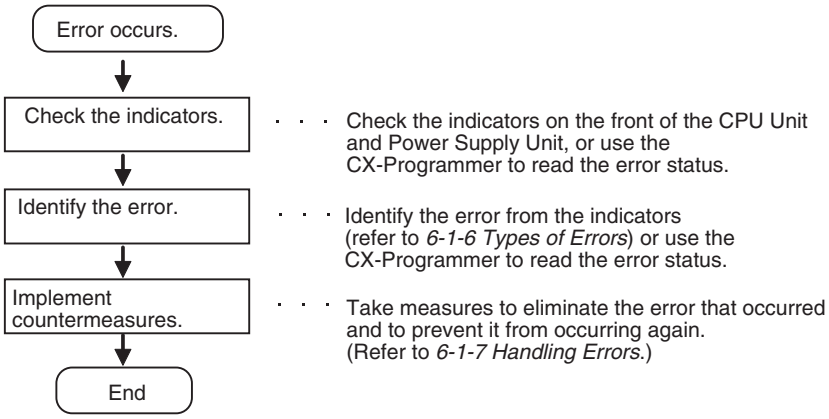

6-1-2 Checking Errors

The type of error that occurred can be determined by checking the indicators on the front of the CPU Unit or by using the CX-Programmer. For details on error types, refer to *6-1-6 Types of Errors*.

Checking the Indicators

Indicators on front of CPU Unit

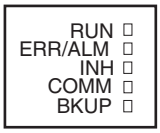

RUN:	Lit green when the PLC is in RUN or MONITOR mode.
ERR/ALM:	Shows the results of self-diagnosis. Flashing red: Non-fatal error Lit red: Fatal error
INH:	Lit yellow when Output OFF Bit has been turned ON.
COMM:	Flashing yellow when the CPU Unit is communicating through the RS-232C (USB) port.
BKUP:	Flashing yellow when data is being backed up from RAM to built-in flash memory.
POWER:	Lit when 5 V is output from the Power Supply Unit.

Power Supply Unit

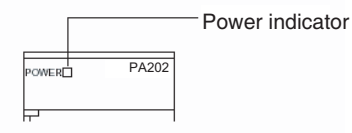

Checking Error Status with the CX-Programmer

Use the following procedure to read the error status.

1 Connect the CX-Programmer online.

2 Double-click *Error Log* in the project tree in the main window. The PLC Error Window will be displayed.

3 Click the **Errors** Tab. The current errors will be displayed on the Errors Tab Page.

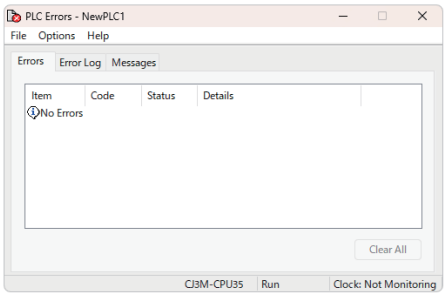

6-1-3 Checking Detailed Status

You can check detailed error status using information registered in the Auxiliary Area. The following error details are registered.

- Error Flags: The Auxiliary Area contains flags that indicate the type of error. There are error flags for various types of error.
- Error Information: The Auxiliary Area contains words that provide detailed information on current errors. Error information is provided for various types of error.
- Error Code: The error code assigned to the current error is stored in word A400 regardless of the type of error. If two or more errors occur at the same time, the highest (most serious) error code will be stored in A400.

6-1-4 Reading Error Log Information

If the error status could not be checked when the error occurred, it can be checked by reading error log data. The following information is stored in the error log.

- Error code (This is the same error code as is stored in word A400.)
- Error information
- Time of occurrence

Error Log Information

A maximum of 20 error records will be stored in the error log. If more than 20 errors occur, the oldest error record (in A100 to A104) will be deleted and the 19 records stored in A105 to A199 will be shifted by one, with the newest record being stored in A195 to A199.

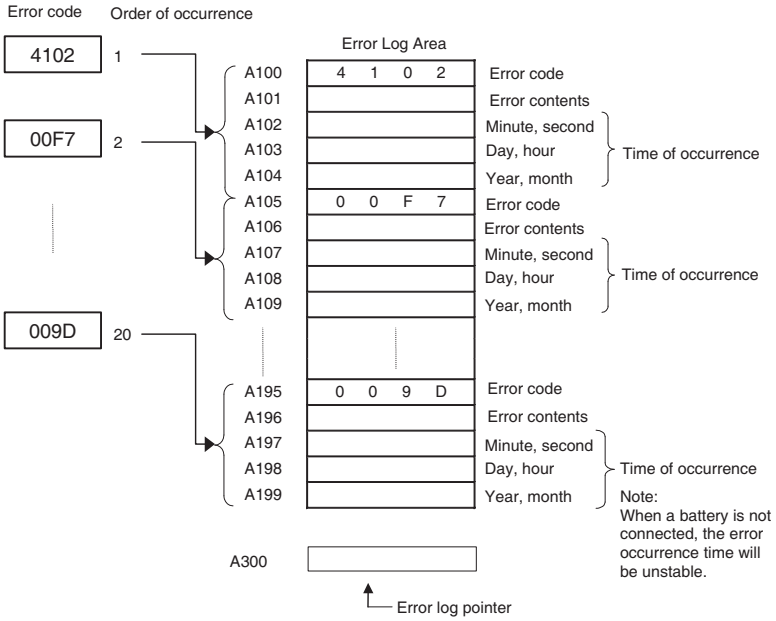

Checking Error Log Information

The following methods can be used to check error log information with the CX-Programmer.

● CX-Programmer PLC Error Window

Check the error log by clicking the **Error Log** Tab in the PLC Errors Window of the PLC.

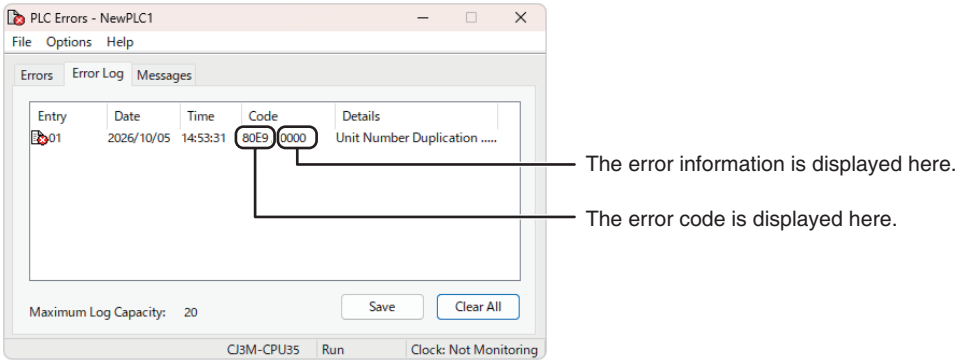

The example above shows that unit number 17 has been duplicated for Special I/O Units.

- Error code 80E9: Unit number duplication error
- Error information: 80 “11”: 11 hex = 17 decimal

For details on error codes and error information, refer to *A-3 Fatal and Non-fatal Error Details*.

● Directly Monitoring the Area where Error Log Information is Stored

1 Connect the CX-Programmer online.

2 Read words A100 to A199.

3 Check the error status from the registered data.

6-1-5 I/O Table Verification

When an I/O verification error or a CPU standby error occurs, the following procedure can be used to verify the I/O tables to locate where the error occurred. With the CX-Programmer, use the following procedure.

1 Double-click I/O Tables in the project tree in the main window.

The I/O Table Window will be displayed.

2 Select ***Verify*** from the Options Menu in the I/O Table Window.

The I/O table verification results will be displayed.

6-1-6 Types of Errors

The type of error that has occurred can be identified by checking the indicators on the front of the CPU Unit and the Power Supply Unit, or by using the CX-Programmer to check the error status. The errors detected by the CPU Unit are listed in the following table.

For details on errors that are not detected by the CPU Unit, refer to *6-3 Non-CPU Unit Errors and Remedies*.

Error name		POWER	RUN	ERR/ALM	INH	COMM	Error code (stored in A400)	Operation status
Power supply error		OFF	OFF	OFF	OFF	OFF	---	Operation stops.
CPU Standby		ON	OFF	OFF	---	---	---	Operation stops.
CPU reset							---	Operation stops.
CPU error (WDT error)*1		ON	OFF	ON	---	---	---	Operation stops.
USB port communications error		ON	ON	OFF	---	---	---	Operation continues.
RS-232C port communications error		ON	ON	OFF	---	OFF	---	Operation continues.
Fatal errors*1*2	Cycle time exceeded error	ON	OFF	ON	---	---	0x809F	Operation stops.
	I/O bus error						0x80C0 to 0x80C7, 0x80CE, 0x80CF	
	I/O setting error						0x80E0	
	Too many I/O points error						0x80E1	
	Unit number duplication error						0x80E9	
	Rack number duplication error						0x80EA	
	Program error						0x80F0	
	Memory error						0x80F1	
	Version error						0x80F2	
	Memory Card Transfer Error						0x80F4	
	FALS error						0xC101 to 0xC2FF	
Non-fatal errors*2	Duplicated refreshing error	ON	ON	Flashing	---	---	0x008B	Operation continues.
	Basic I/O error						0x009A	
	PLC Setup error						0x009B	
	Backup memory error						0x00F1	
	Tag memory error						0x00F2	
	System work errors						0x00F3	
	Battery error						0x00F7	
	CPU Bus Unit error						0x0200 to 0x020F	
	Special I/O Unit error						0x0300 to 0x035F, 0x03FF	
	CPU Bus Unit setting error						0x0400 to 0x040F	
	FAL error						0x4101 to 0x42FF	
	Special I/O Unit setting error						0x0500 to 0x055F	

*1 The indicator status is the same for CPU errors and fatal errors, but they can be distinguished because a Programming Device can be connected when a fatal error occurs, but not when a CPU error occurs.

*2 For details on fatal errors and non-fatal errors, refer to *A-3 Fatal and Non-fatal Error Details*.

Note The indicator status shows the status of the errors that have occurred in RUN or MONITOR mode.

6-1-7 Handling Errors

This section describes the measures to take for the errors that most commonly occur. First check the error status. Then, make a preliminary determination of the cause of the error, confirm the cause, correct the error, and take measures to ensure that it will not occur again. For all other errors, refer to *A-3 Fatal and Non-fatal Error Details*.

Power Supply Errors

A power supply error occurs when a voltage of 5 V is not output from the Power Supply Unit.

POWER	RUN	ERR/ALM	Error flag	Error code	Error information
Not lit.	Not lit.	Not lit.	None	None	None

Suspected cause of error	Confirmation method	Remedy	Prevention of recurrence
Power is not being input.	Use a tester to measure the voltage at the input terminals of the Power Supply Unit.*1	Turn the power ON again.	Investigate the reason that the power was turned OFF.
Connection status of power supply selector terminals	• 100 VAC: Use a tester check for short-circuits. • 200 VAC: Check for disconnections.	Reconnect and secure the terminal connections.	Periodically (approximately once a year) tighten the terminal connections.
The voltage is out of the allowable range for the power supply.	Use a tester to measure the voltage at the input terminals to the Power Supply Unit.*1	Correct the power supply system for the PLC.	Same as at the left.
Power Supply Unit failure	Replace the Power Supply Unit and check operation. (Check whether the POWER indicator is lit.)	Replace the Power Supply Unit.	Depends on the type of error.
Failure at another Unit	Remove in order the Units mounted in the Rack and check the POWER indicator.	Replace the failed Unit.	Depends on the type of error.

*1 The following table shows the allowable power supply ranges for each Power Supply Unit model.

Model	Power supply voltage	Allowable power supply voltage fluctuation
CJ1W-PA205R/PA202	100 to 240 VAC	85 to 264 VAC
CJ1W-PD025	24 VDC	19.2 to 28.8 VDC

CPU Standby Errors

When a CJ-series PLC is turned ON, the CPU starts cyclic servicing and enters RUN mode only after all Special I/O Units and CPU Bus Units have been detected. If the startup mode is RUN or MONITOR mode, the CPU will remain on standby until all Units have been detected.

POWER	RUN	ERR/ALM	Error flag	Error code	Error information
Lit.	Not lit.	Not lit.	None	None	None

● Recovery Processing Flow

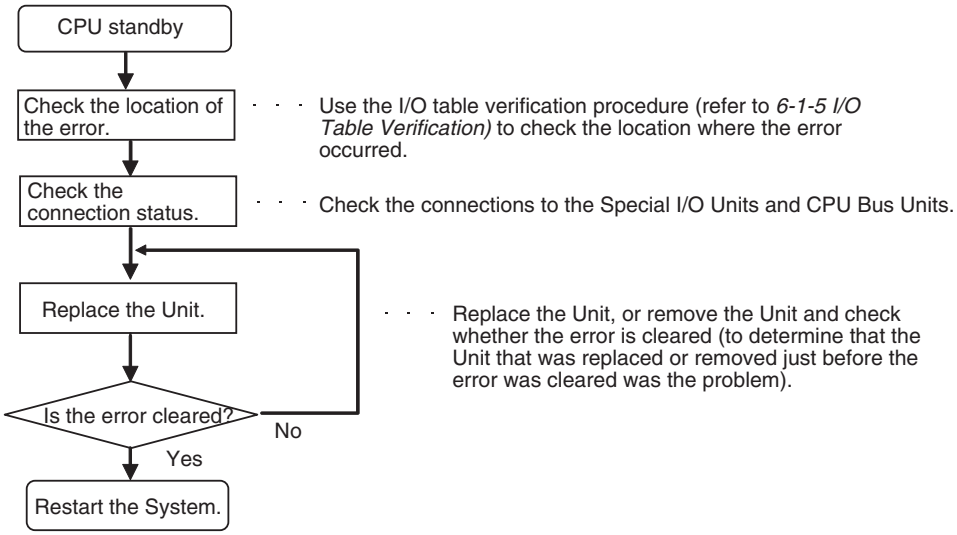

● Error Causes and Remedies

Suspected cause of error	Confirmation method	Remedy	Prevention of recurrence
Faulty connection at Unit (at a connector)	Check the insertion at the connector. Restart the Unit and check whether the error is cleared.	Tighten the screws.	Same as at the left.
Unit failure	Replace the Unit that is causing the standby (the undetected Unit). If the error is not cleared, remove the Units in order until the status returns to normal.	• Replace the Special I/O Unit or Interrupt Unit for which "$" is displayed when the I/O tables are read. • Replace the failed Unit.	(Determined by the cause of the failure.)

Additional Information

The CJ3 CPU Units support the following function.

- **Startup Condition Setting**

  After the power supply is turned ON, it is possible to start operation of the CPU Unit in RUN mode or MONITOR mode even if there is one or more Units that has not completed startup. Select the *Start running program when initializing Unit/Inner board recognition* Check Box in the PLC Setup. For details, refer to *Section 9-3 PLC Setup Settings* in the *CJ-series CJ2/CJ3 CPU Unit Software User's Manual* (W473).

CPU Reset

The CPU Unit is being reset, and Programming Devices cannot be connected.

POWER	RUN	ERR/ALM	Error flag	Error code	Error information
Lit.	Not lit.	Not lit.	None	None	None

● Error Causes and Remedies

Suspected cause of error	Confirmation method	Remedy	Prevention of recurrence
Power to an Expansion Rack is OFF.	Use a tester to measure the voltage at the input terminals of the Power Supply Unit.*1	Turn ON the power.	Investigate the reason that the power was OFF.
The I/O Connecting Cable is incorrectly installed. • The IN-OUT connectors are reversed. • The cable does not have good contact at the connectors. • Two or more I/O Control Units are mounted on the CPU Rack, or an I/O Control Unit is mounted to an Expansion Rack.	Check the connections.	Reconnect the cable.	If the Cable is disconnected, check for vibration and shock.

*1 The following table shows the allowable power supply ranges for each Power Supply Unit.

Model	Power supply voltage	Allowable power supply voltage fluctuation
CJ1W-PA205R/PA202	100 to 240 VAC	85 to 264 VAC
CJ1W-PD025	24 VDC	19.2 to 28.8 VDC

Precautions for Correct Use

Observe the following points when using Expansion Racks.

- Always confirm the safety of any related equipment before turning the power supply ON or OFF.
- When the power supply is interrupted to an Expansion Rack, the CPU Unit will stop program execution and the same operations as are performed when the power supply to the CPU Unit is interrupted will be performed. For example, if the power OFF interrupt task is enabled, it will be executed. If power is then restored to the Expansion Rack, the CPU Unit will perform startup processing. The same operational status as existed before the power interrupt will not necessarily be continued.

CPU Errors

CPU errors are error that occur in the CPU Unit itself. A CPU error occurs when the WDT (watchdog timer) times out. Programming Devices cannot be connected when a CPU error occurs.

POWER	RUN	ERR/ALM	Error flag	Error code	Error information
Lit.	Not lit.	Lit.	None	None	None

● Error Causes and Remedies

Suspected cause of error	Confirmation method	Remedy	Prevention of recurrence
Unit failure	A CPU error has possibly occurred in the following cases. • If the error is not cleared when the CPU Unit is restarted after the recovery measures. • If the error occurs frequently • If the condition improves when the Unit is replaced.	Replace the CPU Unit.	Same as at the left.
A conductive object has gotten inside.	Check for conductive objects.	Clean the inside of the Unit with an air blower or replace the CPU Unit.	Do not do any metal working in the vicinity of the control panel. Close the control panel.
Noise • The microcomputer inside the CPU Unit is malfunctioning.	When the CPU Unit is restarted after the recovery measures, the error will either be cleared or will continue to occur. Check whether errors become less frequent after the Unit is replaced.	Take measures against noise. (Investigate the path of entry.) • FG • Power lines	Same as at the left.

Precautions for Correct Use

- Always confirm the safety of any related equipment before turning the power supply ON or OFF.
- When power supply is interrupted to an Expansion Rack, the CPU Unit will stop program execution and the same operations as are performed when the power supply to the CPU Unit is interrupted will be performed. For example, if the power OFF interrupt task is enabled, it will be executed. If power is then restored to the Expansion Rack, the CPU Unit will perform startup processing. The same operational status as existed before the power interrupt will not necessarily be continued.

Communications Error (Peripheral (USB) Port)

A communications error will occur if there is an error in communications between the peripheral (USB) Port and a connected device. A communication error cannot be identified by LED indicator.

● Error Causes and Remedies

Suspected cause of error	Confirmation method	Remedy	Prevention of recurrence
The communications cable is disconnected.	Perform a visual inspection and pull on the cables.	Reconnect the cables.	During operation, confirm that the connections are secure. Check for vibration or shock.

Communications Error (Serial Port (RS-232C))

A communications error will occur if there is an error in communications between the serial (RS-232C) port and a connected device.

POWER	RUN	ERR/ALM	COMM	Error flag	Error code	Error information
Lit.	Lit.	Not lit.	Not lit.	None	None	None

● Error Causes and Remedies

Suspected cause of error	Confirmation method	Remedy	Prevention of recurrence
Communications settings are incorrect.	• Check whether the DIP switch pin 5 setting and and the serial port settings in the PLC Setup are correct. • If a host computer is connected, check the host computer serial port settings and the program.	• Correctly set DIP switch pin 5 and the serial port settings in the PLC Setup. • Correct the host computer serial port settings and the program.	Same as at the left.
A communications cable is incorrectly connected.	• Check the cable connections.	• Correct the cable connections.	Same as at the left.
A communications cable is disconnected.	Perform a visual inspection and pull on the cables.	Reconnect the cables.	During operation, confirm that the connections are secure. Check for effects of vibration or shock.

Cycle Time Exceeded Error (Fatal Error)

Cycle Time Exceeded Error

A cycle time exceeded error will occur if the PLC cycle time exceeds the setting for Watch Cycle Time in the PLC Setup.

POWER	RUN	ERR/ALM	Error flag	Error code	Error information
Lit.	Not lit.	Lit.	A401.08	809F	None

Error Causes and Remedies

Suspected cause of error	Confirmation method	Remedy	Prevention of recurrence
An interrupt task with a long processing time was executed.	Check the Max. Interrupt Task Processing Time (A440)	Divide the interrupt task into sections.	Same as at the left.
An incorrect value (an extremely large number) was set for the number of repeats of FOR(512).	Set up a trap in the ladder program to monitor the number of repeats.	Correct the ladder program.	Same as at the left.

I/O Bus Error (Fatal Error)

An I/O bus error will occur if there is an error in a data transfer between the CPU Unit and a Unit connected in the Rack.

POWER	RUN	ERR/ALM	Error flag	Error code	Error information
Lit.	Not lit.	Lit.	A401.10	80C0 to 80C7 or 80CF	A404*1

*1 The numbers of the slot and Rack where the I/O bus error was detected are stored in word A404.

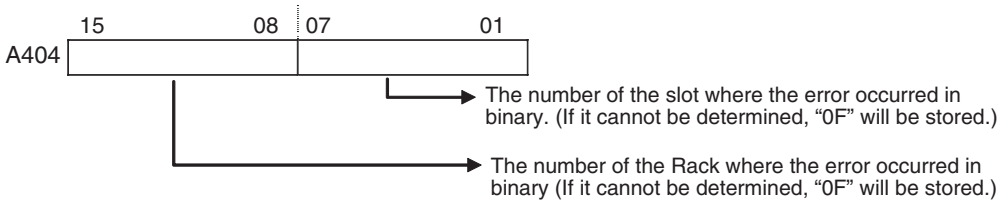

● Recovery Processing Flow

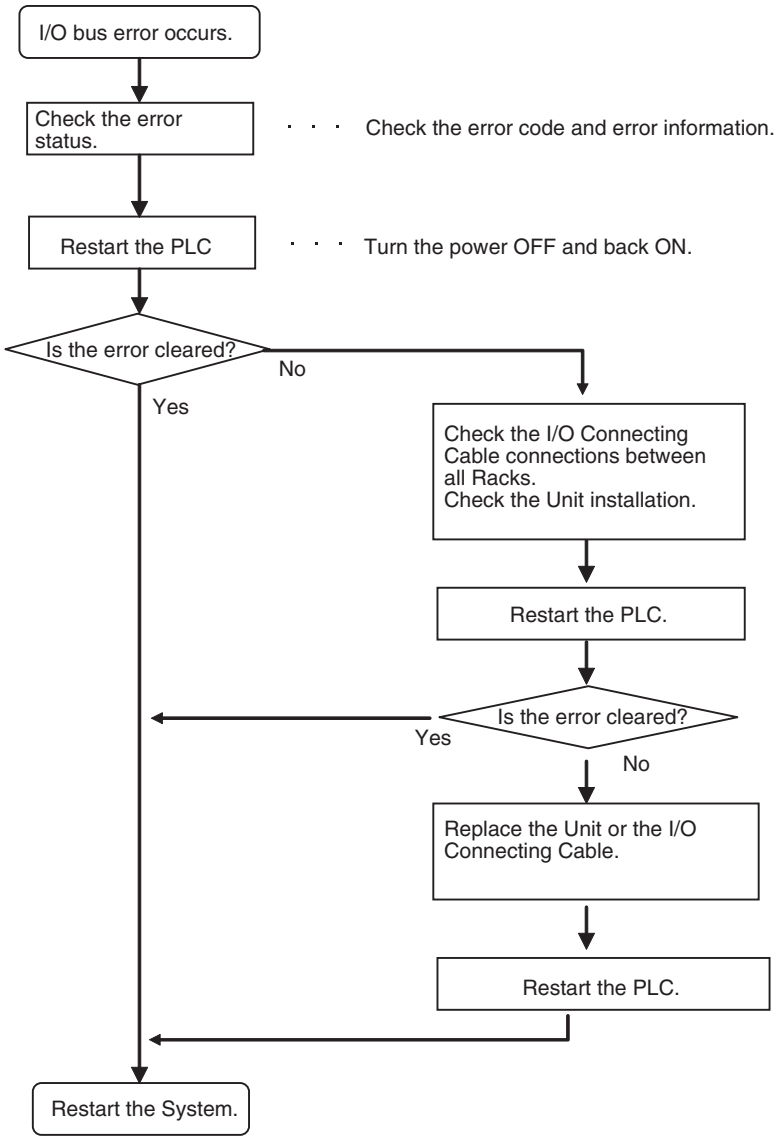

Error Causes and Remedies

Suspected cause of error	Confirmation method	Remedy	Prevention of recurrence
The I/O Connecting Cable is disconnected.	Perform a visual inspection and pull on the Cables.	Reconnect the cables.	During operation, confirm that the connections are secure. Check for vibration or shock.
Equipment failure • CPU Unit • I/O Connecting Cable (damage to bus interface circuit)	An I/O bus error has possibly occurred in the following cases. • If the error is not cleared when the CPU Unit is restarted • If the error occurs frequently • If the condition improves when the Unit is replaced.	Replace the equipment. • CPU Unit • I/O Connecting Cable	---
A conductive object has gotten inside.	Check for conductive objects.	Clean the inside of the Unit with an air blower or replace the CPU Unit.	Do not do any metal working in the vicinity of the control panel. Close the control panel.
Faulty connector contact (A foreign object has gotten inside.)	Check for foreign objects in the connector.	Replace the Unit or take off the connector and remove the foreign object.	Make sure that the operating environment is free of dirt and dust.
Noise • Data corruption in bus signals • Malfunctioning in bus interface circuit	When the CPU Unit is restarted after the recovery measures, the error will either be cleared or will continue to occur. Check whether errors become less frequent after the Unit is replaced.	Take measures against noise. (Investigate the path of entry.) • FG • Power lines • I/O connecting cable (inductive noise)	Same as at the left.

I/O Setting Error (Fatal Error)

An I/O setting error will occur if the Units that are actually connected do not match the Unit in the registered I/O tables.

POWER	RUN	ERR/ALM	Error flag	Error code	Error information
Lit.	Not lit.	Flashing.	A401.10	80E0	---

● Recovery Processing Flow

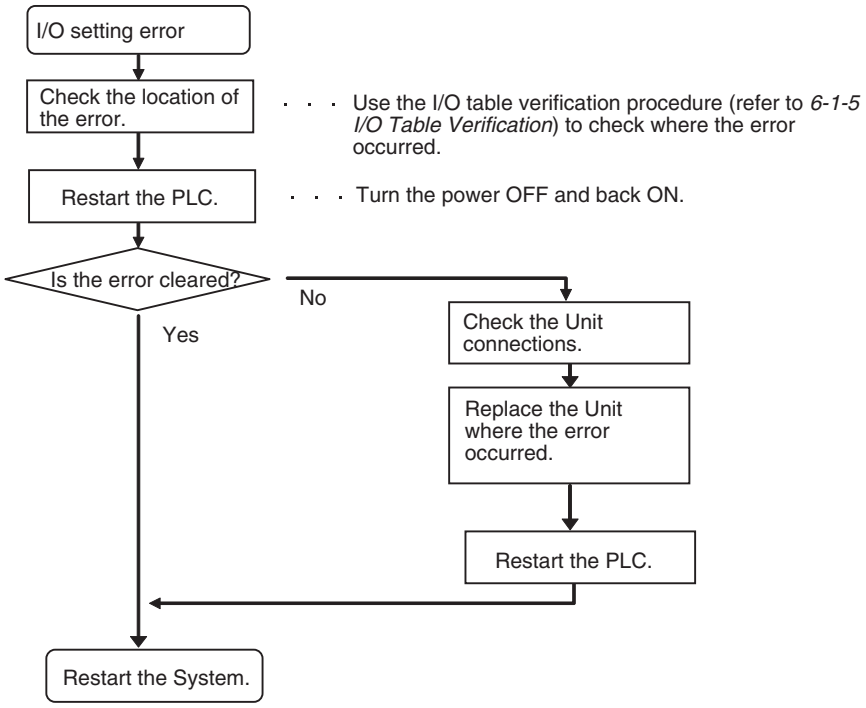

● Error Causes and Remedies

Suspected cause of error	Confirmation method	Remedy	Prevention of recurrence
Faulty connection at Unit (at a connector)	Check the insertion at the connector. Restart the Unit and check whether the error is cleared.	Tighten the screws.	Same as at the left.
Unit failure	If restarting the Unit does not clear the error, check whether the error is cleared by replacing the Unit.	Replace the applicable Unit.	Same as at the left.
Noise • Data corruption in bus signals	Restart the CPU Unit and check whether the error continues to occur.	Take measures against noise. (Investigate the path of entry.) • FG • Power lines	Same as at the left.

Memory Error (Fatal Error)

A memory error will occur if there is a memory error in the CPU Unit or if a checksum error is detected (checksum checked by the PLC with each cycle). The details of the cause of the error will be stored in the error information in the Auxiliary Area.

POWER	RUN	ERR/ALM	Error flag	Error code	Error information
Lit.	Not lit.	Lit.	A401.15	80F1	A403*1

*1 Individual bits in A403 indicate where the memory error occurred.

Recovery Measures

Check the detailed error contents in the error information in the Auxiliary Area, and then implement the following recovery measures. If these measures cannot solve the problem, there is a strong probability that the Unit has failed, so replace the Unit.

Error information	Error contents	Recovery measures
A403.00: ON	A checksum error has occurred in the user program memory.	Transfer the user program to the CPU Unit again.
A403.04: ON	A checksum error has occurred in the PLC Setup.	Transfer the PLC Setup to the CPU Unit again.
A403.05: ON	A checksum error has occurred in the registered I/O table.	Transfer the I/O tables to the CPU Unit again.
A403.07: ON	A checksum error has occurred in the routing tables.	Transfer the routing tables to the CPU Unit again.
A403.08: ON	A checksum error has occurred in the CPU Bus Unit setup.	Transfer the CPU Bus Unit setup again.

Additional Information

Checksums are used to detect illegal rewriting in a specific area of memory by calculating and comparing sums written to memory in advance to sums during operation.

- Use any of the following methods to transfer the data again.
  - Use the CX-Programmer to download data.
  - Use the automatic transfer at startup function to download data saved on a Memory Card. For details, refer to *Section 10-3-5 Automatic Transfer at Startupautomatic transfer at startup* in the *CJ-series CJ2/CJ3 CPU Unit Software User's Manual* (W473).
  - Use the simple backup function to download data saved on a Memory Card. For details, refer to *8-3 Simple Backup*.
- The CJ3 CPU Unit has built-in flash memory for backup. When the CPU Unit is restarted, data is transferred to memory for calculation and this sometimes enables an error to be cleared.

Recovery Processing Flow

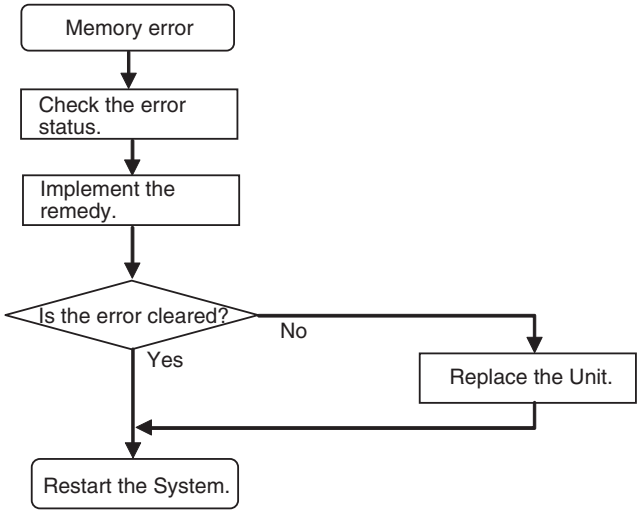

Error Causes and Remedies

If the measures described above do not clear the error, take the measures shown in the following table.

Suspected cause of error	Confirmation method	Remedy	Prevention of recurrence
Unit failure • Memory element failure • Memory peripheral circuit failure	A memory error has probably occurred in the following cases. • If the error is not cleared when the CPU Unit is restarted after the recovery measures • If the error occurs frequently • If the condition improves when the Unit is replaced.	Replace the CPU Unit.	Determined by the cause of the failure.
A conductive object has gotten inside.	Check for conductive objects.	Clean the inside of the Unit with an air blower or replace the CPU Unit.	Do not do any metal working in the vicinity of the control panel. Close the control panel.
Noise • Data corruption in memory • Microcomputer malfunctioning • Memory write circuit malfunctioning	When the CPU Unit is restarted after the recovery measures, the error will either be cleared or will continue to occur. Check whether errors become less frequent after the Unit is replaced.	Take measures against noise. (Investigate the path of entry.) • FG • Power lines	Same as at the left.
Software error*1	None	None	None

*1 This refers to errors caused by data corruption. Affected by cosmic rays (neutrons) and naturally occurring radiation, so data can become corrupted.

Basic I/O Error (Non-fatal Error)

A basic I/O error occurs when there is an error at a Basic I/O Unit.

POWER	RUN	ERR/ALM	Error flag	Error code	Error information
Lit.	Lit.	Flashing.	A402.12	009A	A408*1

*1 Error Information

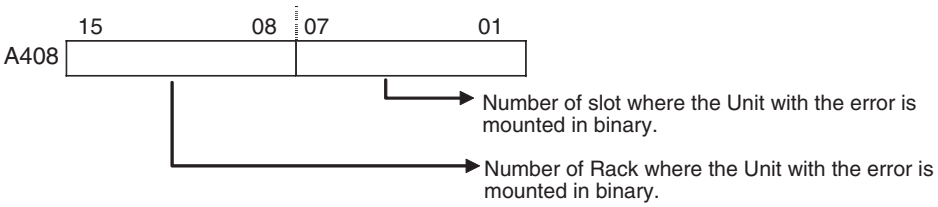

● Recovery Processing Flow

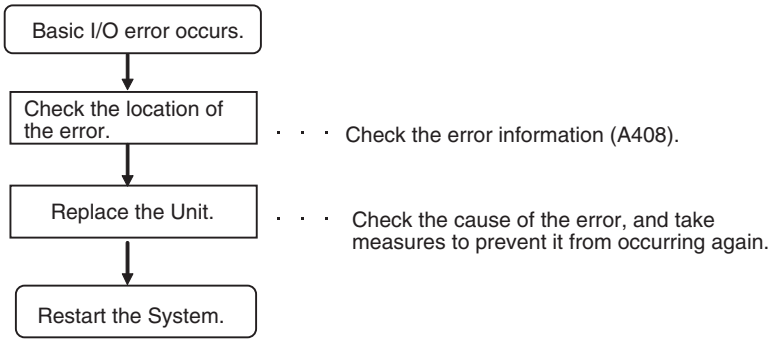

● Error Causes and Remedies

Suspected cause of error	Confirmation method	Remedy	Prevention of recurrence
A fuse is burned out.	Measure the voltage at the power supply terminals. Check whether 24 V is being supplied. (Check whether the problem is solved by replacing the fuse.)	Replace the fuse.	Check the maximum switching current.
The external power supply is OFF (disconnected).	Measure the voltage at the power supply terminals. Check whether 24 V is being supplied.	Turn ON the power supply.	Investigate the reason that the power was turned OFF.
Other errors specific to Units	Refer to the manual for the particular Unit.	Same as at the left.	Same as at the left.

Battery Error (Non-fatal Error)

A battery error occurs when the battery voltage drops.

POWER	RUN	ERR/ALM	Error flag	Error code	Error information
Lit.	Lit.	Flashing.	A402.04	00F7	---

● Recovery Processing Flow

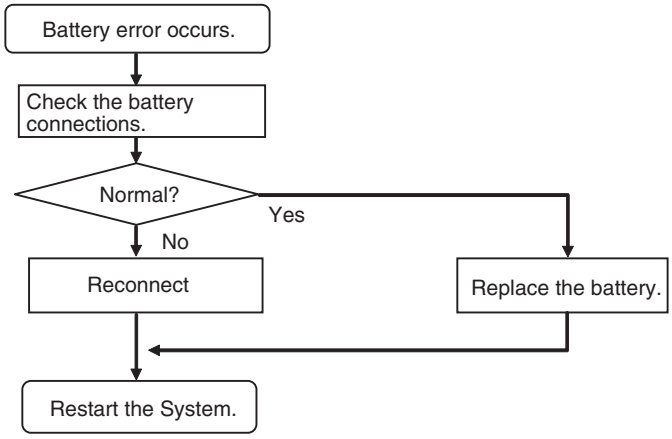

● Error Causes and Remedies

Suspected cause of error	Confirmation method	Remedy	Prevention of recurrence
A connector is disconnected.	Check the connection at the connector.	Reconnect the connector.	Check for vibration and shock.
Battery voltage is low.	Check whether the error is cleared by replacing the battery.	Replace the battery. For details, refer to *7-2 Replacing the Battery*.	Periodically replace the battery.

Note Do Not Detect Low Battery" is set as the default setting in PLC Setup. When a battery is connected, set "Detect Low Battery" to ON (Detect) in PLC Setup.

CPU Bus Unit Error (Non-fatal Error)

A CPU Bus Unit error occurs when there is an error in the data conversion between the CPU Unit and a CPU Bus Unit.

POWER	RUN	ERR/ALM	Error flag	Error code	Error information
Lit.	Lit.	Flashing.	A402.07	0200 to 020F	A417*

* The bit corresponding to the unit number where the error occurred turns ON. (Bits 00 to 15 correspond to unit numbers 0 to F.)

● Recovery Processing Flow

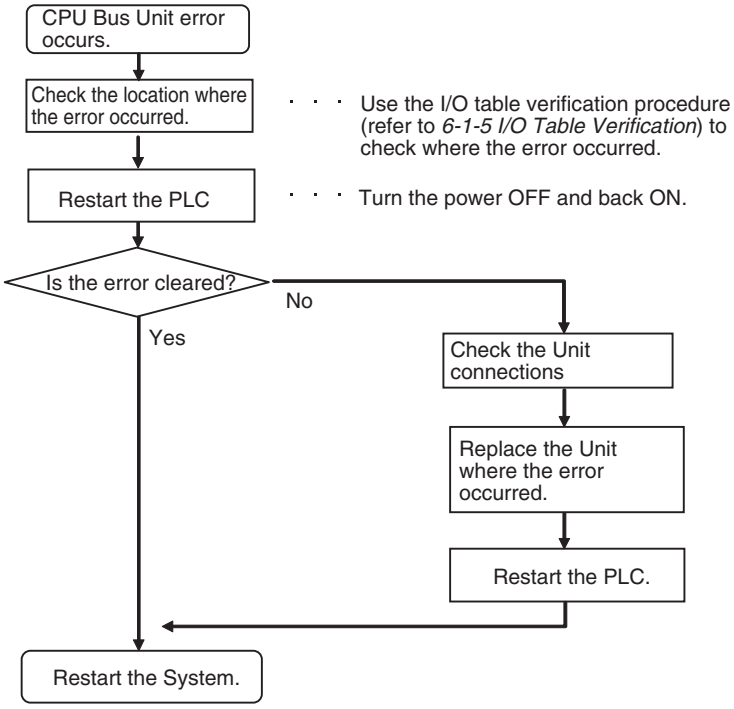

● Error Causes and Remedies

Suspected cause of error	Confirmation method	Remedy	Prevention of recurrence
An error specific to the Unit	Refer to the manual for the particular Unit.	Same as at the left.	Same as at the left.
Faulty connection at Unit (at a connector)	Check the insertion at the connector. Restart the Unit and check whether the error is cleared.	Tighten the screws.	Check for vibration and shock.
Unit failure	If restarting the Unit does not clear the error, check whether the error is cleared by replacing the Unit.	Replace the applicable Unit.	Same as at the left.
Noise • Data corruption in bus signals	Restart the CPU Unit and check whether the error occurs again.	Take measures against noise. (Investigate the path of entry.) • FG • Power lines	Same as at the left.

Special I/O Unit Error (Non-fatal Error)

A Special I/O Unit error occurs when there is an error in the data conversion between the CPU Unit and a Special I/O Unit.

POWER	RUN	ERR/ALM	Error flag	Error code	Error information
Lit.	Lit.	Flashing.	A402.06	0300 to 035F or 03FF	A418 to A423 *

* The bit corresponding to the unit number where the error occurred turns ON.

● Recovery Processing Flow

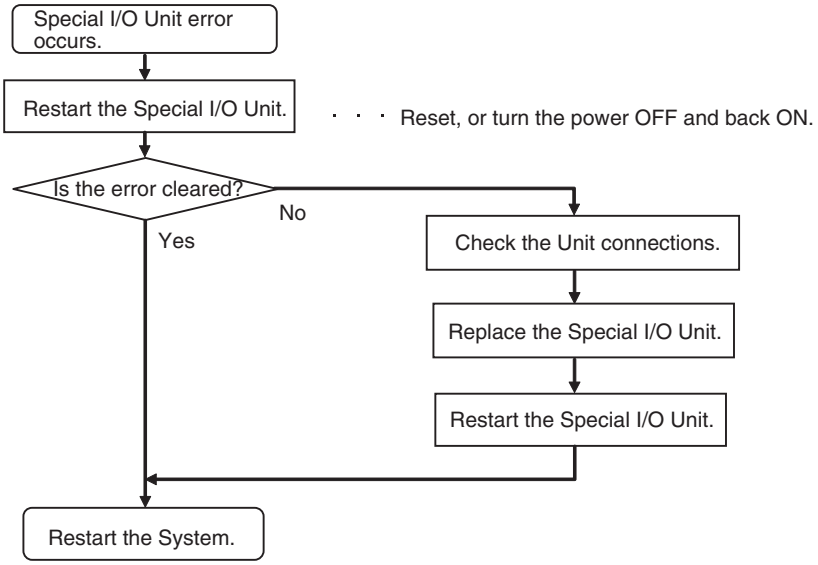

● Error Causes and Remedies

Suspected cause of error	Confirmation method	Remedy	Prevention of recurrence
An error specific to the Unit	Refer to the manual for the particular Unit.	Same as at the left.	Same as at the left.
Faulty connection at Unit (at a connector)	Check the insertion at the connector. Restart the Unit and check whether the error is cleared.	Tighten the screws.	Check for vibration and shock.
Unit failure	If restarting the Unit does not clear the error, check whether the error is cleared by replacing the Unit.	Replace the applicable Unit.	Same as at the left.
Noise • Data corruption in bus signals	Restart the CPU Unit and check whether the error occurs again after this.	Take measures against noise. (Investigate the path of entry.) • FG • Power lines	Same as at the left.

Special I/O Unit Setting Error (Non-fatal Error)

A Special I/O Unit setting error will occur if a Unit registered in the registered I/O tables does not agree with the Unit actually connected in the PLC.

POWER	RUN	ERR/ALM	Error flag	Error code	Error information
Lit.	Lit.	Flashing.	A402.02	0500 to 055F	A428 to A433*

* The bit corresponding to the Unit for which the error occurred will turn ON.

● Recovery Processing Flow

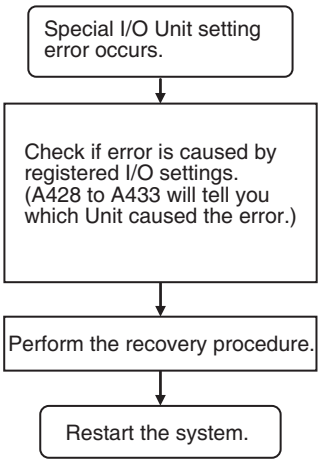

● Error Causes and Remedies for Registered I/O Table Settings

Suspected cause of error	Confirmation method	Remedy	Prevention of recurrence
The model of a CPU Bus Unit in the registered I/O tables is different from the model the Unit actually mounted in the PLC.	Check the Units in the PLC.	Correct the I/O table settings.	Same as at the left.

6-2 Troubleshooting Built-in EtherNet/IP Port Errors

6-2-1 Checking Built-in EtherNet/IP Port Error Status

Built-in EtherNet/IP port errors can be checked on the built-in EtherNet/IP port seven-segment display on the front of the CJ3M-CPU3□ CPU Unit.

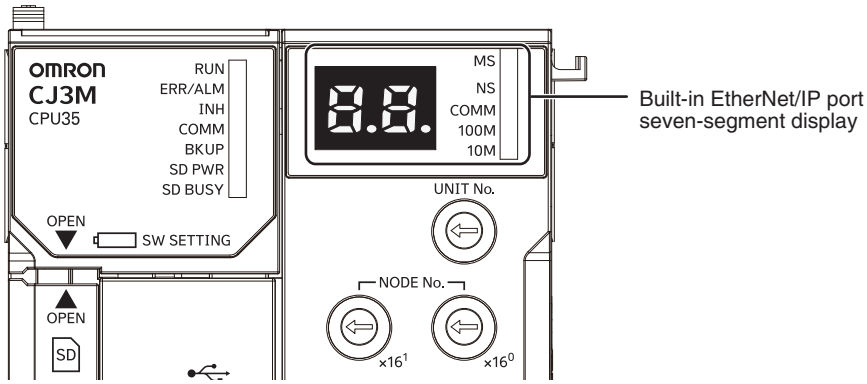

Precautions for Correct Use

- For details on the types of errors related to the built-in EtherNet/IP port, and measures for handling them, refer to *Section 16 Troubleshooting and Error Processing* in the *CS/CJ Series EtherNet/IP Units Operation Manual* (W465).

6-2-2 Checking Error Status at the EtherNet/IP Port Seven-segment Display

Built-in EtherNet/IP port seven-segment display

The seven-segment display alternately displays the built-in EtherNet/IP port node address and the following error codes.

● Normal Operation

Indications			Error
MS	NS	7-segment	
Lit green	Lit or flashing green	Built-in Ether-Net/IP port node address	Normal

● Errors Related to CPU Unit Data Exchange

Indications			Error
MS	NS	7-segment	
Flashing red	Not lit	H1	Duplicate unit number
Flashing red	Not lit	H2	CPU Unit faulty
Lit red	Not lit	H3	Built-in EtherNet/IP port faulty
Flashing red	Not lit	H4	Node address setting error
Flashing red	Not lit	H6	CPU Unit faulty
Flashing red	Not lit	H7	I/O table not registered
Flashing red	---	H8	Simple backup function restore error
Flashing red	---	H9	I/O bus error
Flashing red	---	HA	CPU Unit memory error
Flashing red	Not lit	Hb	CPU Unit event servicing timeout
Flashing red	---	HC	Routing table error
Flashing red	---	Hd	I/O refresh error
Flashing red	---	HE	CPU Unit service monitoring error
Flashing red	---	HF	CPU Unit watchdog timer error

● Errors Related to the CPU Unit

Indications			Error
MS	NS	7-segment	
Flashing red	---	HH	CPU Unit Fatal Error
---	---	---	Output OFF Error

● Errors Related to the Control Bits

Indications			Error
MS	NS	7-segment	
---	---	C6	Multiple Switches ON

● Errors Related to the Tag Data Links

Indications			Error
MS	NS	7-segment	
---	---	d5	Verification Error (target non-existent)
---	---	d6	Connection Failed
---	---	d9	Tag Data Link Error

● Errors Related to Memory Access

Indications			Error
MS	NS	7-segment	
Flashing red	---	E9	Memory Access Error
Flashing red	---	E8	Device Parameters Error
Flashing red	---	EA	IP Advanced Settings Error
Flashing red	---	F2	Ethernet Basic Settings Error

● Errors Related to the Network

Indications			Error
MS	NS	7-segment	
---	---	E1	Ethernet Link Not Detected
---	---	E3	Server Connection Error
---	Lit red	F0	IP Address Duplication
Flashing red	---	F3	Address mismatch
Flashing red	Not lit	F4	Communications Controller Error
Flashing red	---	C8	Node Address Setting Changed During Operation

● Errors Related to Units

Indicator			Error
MS	NS	7-segment	
Lit red	Not lit	---	CPU Bus Unit Error

6-3 Non-CPU Unit Errors and Remedies

6-3-1 Error Causes and Remedies

Input Units

No.	Symptom	Cause	Remedy
1	Not all inputs turn ON or indicators are not lit.	Power is not supplied to Input Unit.	Supply the appropriate external input power.
		Supply voltage is low.	Adjust supply voltage to within rated range.
		Terminal block mounting screws are loose.	Tighten screws.
		Faulty contact of terminal block connector.	Replace terminal block connector.
2	Not all inputs turn ON (indicator lit).	Input circuit is faulty.	Replace Unit.
3	Not all inputs turn OFF.	Input circuit is faulty.	Replace Unit.
4	Specific bit does not turn ON.	Input device is faulty.	Replace input devices.
		Input wiring disconnected.	Check input wiring
		Terminal block screws are loose.	Tighten screws.
		Faulty terminal block connector contact.	Replace terminal block connector.
		Too short ON time of external input.	Adjust input device.
		Faulty input circuit	Replace Unit.
		Input bit number is used for output instruction.	Correct program.
5	Specific bit does not turn OFF.	Input circuit is faulty.	Replace Unit.
		Input bit number is used for output instruction.	Correct program.
6	Input irregularly turns ON/OFF.	External input voltage is low or unstable.	Adjust external input voltage to within rated range.
		Malfunction due to noise.	Take protective measures against noise, such as: • Install surge suppressor. • Install insulation transformer. • Install shielded cables between the Input Unit and the loads.
		Terminal block screws are loose.	Tighten screws.
		Faulty terminal block connector contact.	Replace terminal block connector.

No.	Symptom	Cause	Remedy
7	Error occurs in units of 8 points or 16 points, i.e., for the same common.	Common terminal screws are loose.	Tighten screws.
		Faulty terminal block connector contact.	Replace terminal block connector.
		Faulty data bus	Replace Unit.
		Faulty CPU	Replace CPU.
8	Input indicator is not lit in normal operation.	Faulty indicator or indicator circuit.	Replace Unit.

Output Units

No.	Symptom	Cause	Remedy
1	Not all outputs turn ON.	Load is not supplied with power.	Supply power.
		Load voltage is low.	Adjust voltage to within rated range.
		Terminal block screws are loose.	Tighten screws.
		Faulty terminal block connector contact.	Replace terminal block connector.
		An overcurrent (possibly caused by a short at the load) resulted in a blown fuse in the Output Unit. (Some Output Units provide an indicator for blown fuses.)	Replace fuse.
		Faulty I/O bus connector contact.	Replace Unit.
		Output circuit is faulty.	Replace Unit.
		If the INH indicator is lit, the Output OFF Bit (A500.15) is ON.	Turn A500.15 OFF.
2	Not all outputs turn OFF.	Output circuit is faulty.	Replace Unit.
3	Output of a specific bit number does not turn ON or indicator is not lit.	Output ON time too short because of a mistake in programming.	Correct program to increase the time that the output is ON.
		Bit status controlled by multiple instructions.	Correct program so that each output bit is controlled by only one instruction.
		Faulty output circuit.	Replace Unit.
4	Output of a specific bit number does not turn ON (indicator lit).	Faulty output device.	Replace output device.
		Break in output wiring.	Check output wiring.
		Loose terminal block screws.	Tighten screws.
		Faulty terminal block connector contact.	Replace terminal block connector.
		Faulty output bit on a Relay Output Unit.	Replace relay.
		Faulty output circuit.	Replace Unit.
5	Output of a specific bit number does not turn OFF (indicator is not lit).	Faulty output bit (Relay Output Units only)	Replace relay.
		Bit does not turn OFF due to leakage current or residual voltage.	Replace external load or add dummy resistor.
6	Output of a specific bit number does not turn OFF (indicator lit).	Bit status controlled by multiple instructions.	Correct program.
		Faulty output circuit.	Replace Unit.

No.	Symptom	Cause	Remedy
7	Output irregularly turns ON/OFF.	Low or unstable load voltage.	Adjust load voltage to within rated range.
		Bit status controlled by multiple instructions.	Correct program so that each output bit is controlled by only one instruction.
		Malfunction due to noise.	Protective measures against noise: • Install surge suppressor. • Install insulation transformer. • Use shielded cables between the Output Unit and the loads.
		Terminal block screws are loose.	Tighten screws.
		Faulty terminal block connector contact.	Replace terminal block connector.
8	Error occurs in units of 8 points or 16 points, i.e., for the same common.	Loose common terminal screw.	Tighten screws.
		Faulty terminal block connector contact.	Replace terminal block connector.
		An overcurrent (possibly caused by a short at the load) resulted in a blown fuse in the Output Unit.	Replace fuse.
		Faulty data bus.	Replace Unit.
		Faulty CPU.	Replace CPU.
9	Output indicator is not lit (operation is normal).	Faulty indicator.	Replace Unit.
10	ERR indicator (load short-circuit alarm) lights and outputs turn OFF.	An external short-circuit or disconnection occurred.	Refer to *A-5-1 Load Short-circuit Protection and Line Disconnection Detection for CJ1W-OD202*.

● Special I/O Units

Refer to the *Operation Manual* for the Special I/O Unit to troubleshoot any other errors.

No.	Symptom	Cause	Remedy
1	The ERH and RUN indicators on the Special I/O Unit are lit.	Special I/O refreshing is not being performed for the Unit from the CPU Unit (CPU Unit monitoring error).	Change the bit corresponding to the unit number to 0 to enable cyclic refreshing, or make sure that the Unit is refreshed from the program using IORF or FIORF at least once every 11 s.

CX-Programmer Connections

Use the following procedure if the CX-Programmer cannot be connected.

● Connecting via the Peripheral (USB) Port

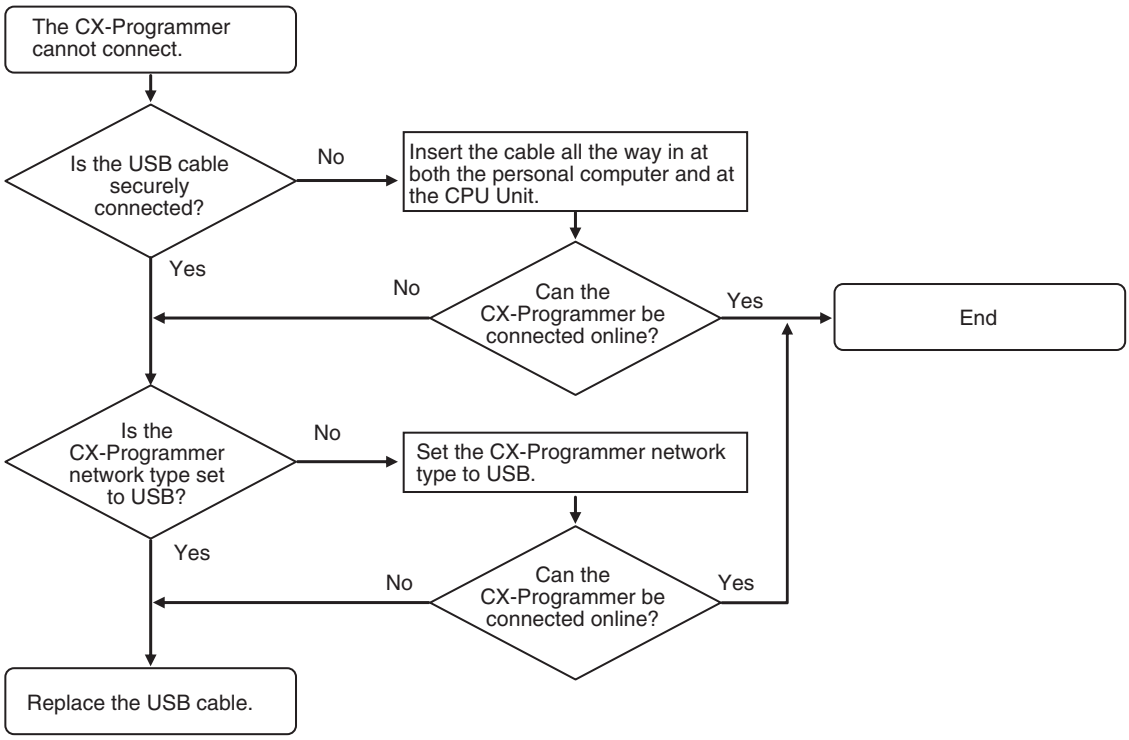

Connection to the EtherNet/IP Port

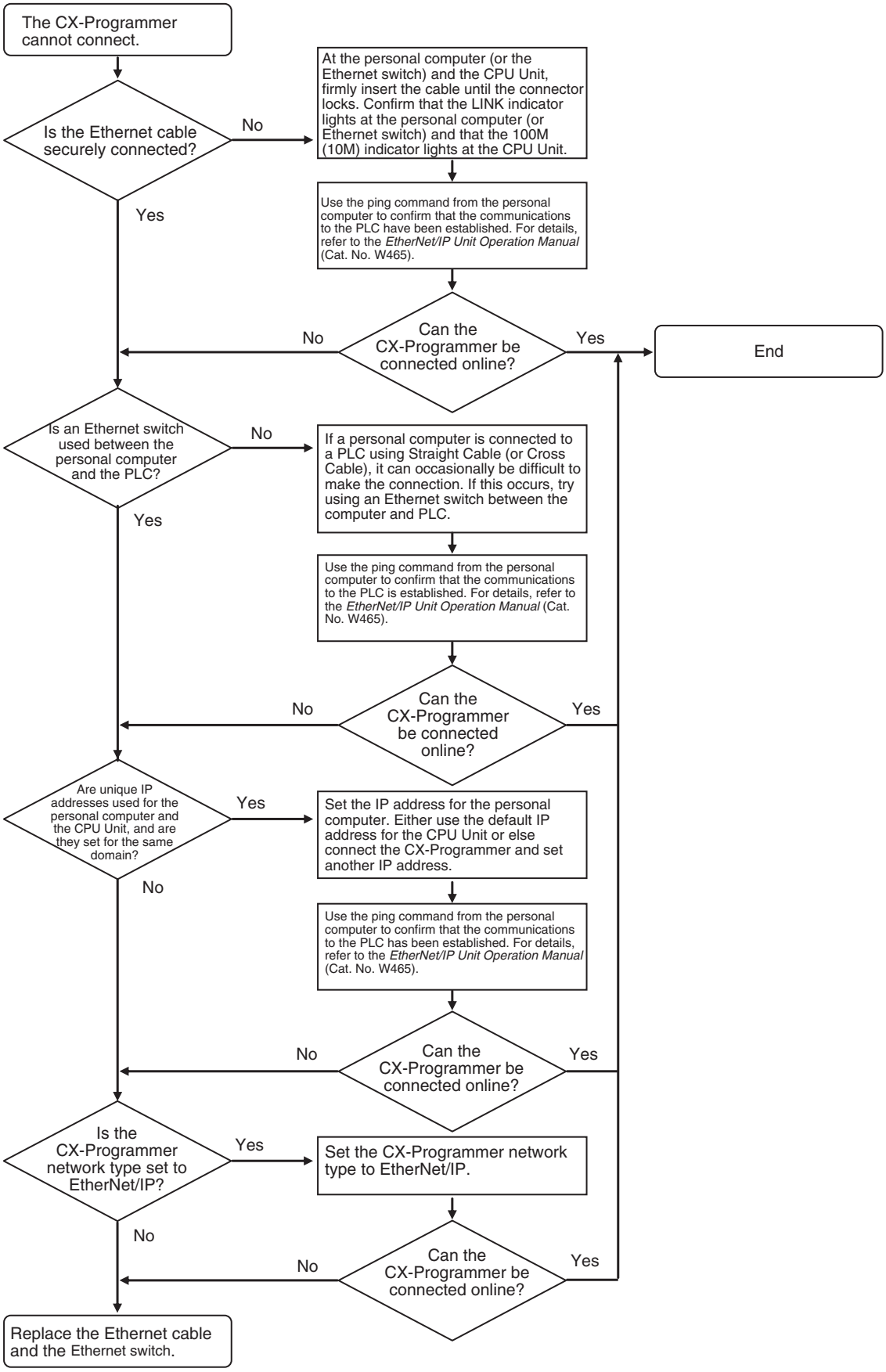

Connecting via the Serial Port

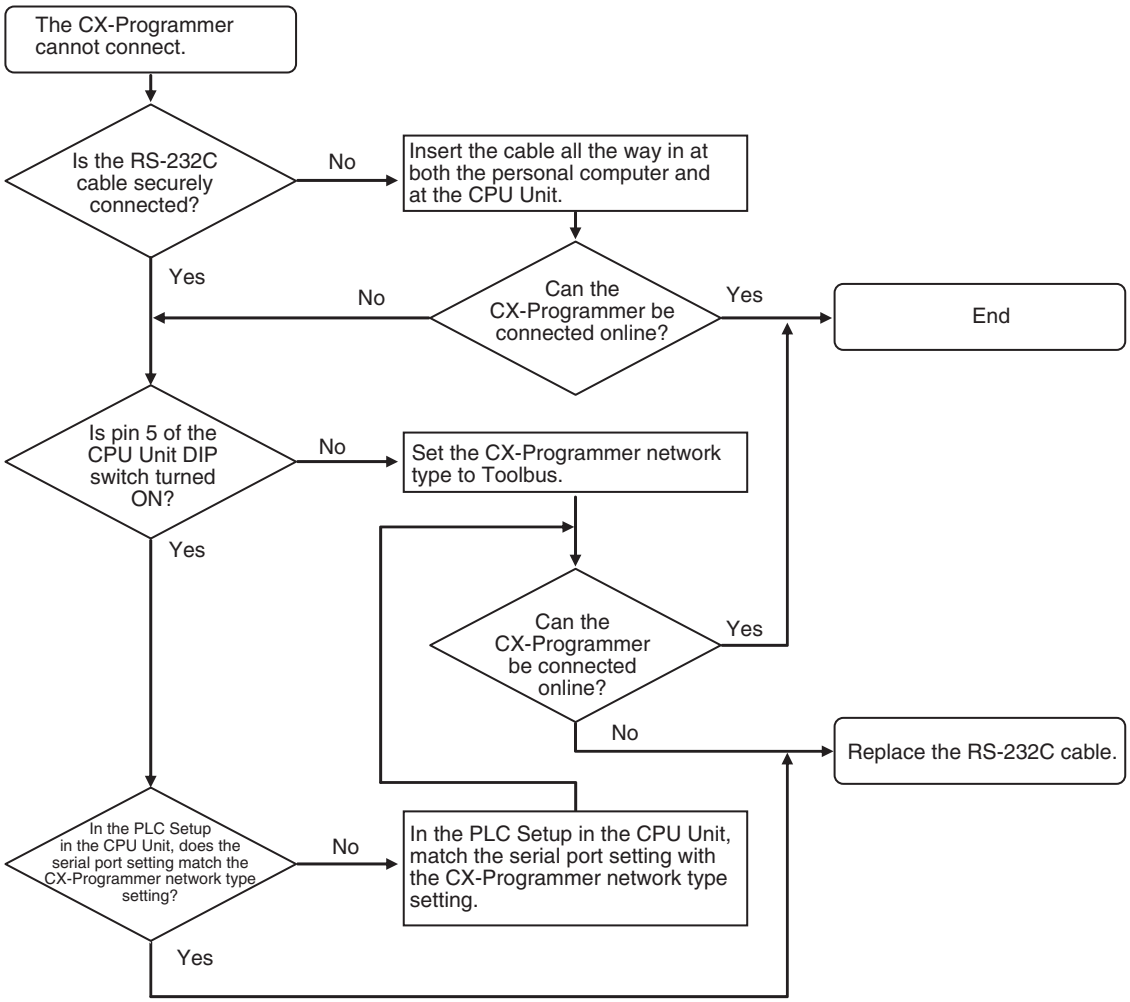

7

Inspection and Maintenance

This section describes the inspection and maintenance that is required for CJ3 PLCs.

7-1 Inspections 7-2

7-1-1 Inspection Points 7-2

7-1-2 Unit Replacement Precautions 7-4

7-2 Replacing the Battery 7-5

7-2-1 Battery Replacement 7-5

7-3 Power Supply Unit Replacement Time 7-8

7-1 Inspections

Daily or periodic inspections are required in order to maintain the PLC's functions in peak operating condition.

7-1-1 Inspection Points

Although the major components in CJ-series PLCs have an extremely long life time, they can deteriorate under improper environmental conditions. Periodic inspections are thus required to ensure that the required conditions are being kept.

Inspection is recommended at least once every six months to a year, but more frequent inspections will be necessary in adverse environments.

Take immediate steps to correct the situation if any of the conditions in the following table are not met.

Periodic Inspection Points

No.	Item	Inspection	Criteria	Action
1	Source Power Supply	Check for voltage fluctuations at the power supply terminals.	The voltage must be within the allowable voltage fluctuation range.	Use a voltage tester to check the power supply at the terminals. Take necessary steps to bring voltage fluctuations within limits.
2	I/O Power Supply	Check for voltage fluctuations at the I/O terminals.	Voltages must be within specifications for each Unit.	Use a voltage tester to check the power supply at the terminals. Take necessary steps to bring voltage fluctuations within limits.
3	Ambient environment	Check the ambient temperature. (Inside the control panel if the PLC is in a control panel.)	0 to 55°C	Use a thermometer to check the temperature and ensure that the ambient temperature remains within the allowed range of 0 to 55°C.
		Check the ambient humidity. (Inside the control panel if the PLC is in a control panel.)	Relative humidity must be 10% to 90% with no condensation.	Use a hygrometer to check the humidity and ensure that the ambient humidity remains between 10% and 90%. Make sure that condensation does not occur due to rapid changes in temperature.
		Check that the PLC is not in direct sunlight.	Not in direct sunlight	Protect the PLC if necessary.
		Check for accumulation of dirt, dust, salt, metal filings, etc.	No accumulation	Clean and protect the PLC if necessary.
		Check for water, oil, or chemical sprays hitting the PLC.	No spray on the PLC	Clean and protect the PLC if necessary.
		Check for corrosive or flammable gases in the area of the PLC.	No corrosive or flammable gases	Check by smell or use a sensor.
		Check the level of vibration or shock.	Vibration and shock must be within specifications.	Install cushioning or shock absorbing equipment if necessary.
		Check for noise sources near the PLC.	No significant noise sources	Either separate the PLC and noise source or protect the PLC.

No.	Item	Inspection	Criteria	Action
4	Installation and wiring	Check that each Unit is connected and locked to the next Unit securely.	No looseness	Press the connectors together completely and lock them with the sliders.
		Check that cable connectors are fully inserted and locked.	No looseness	Correct any improperly installed connectors.
		Check for loose screws in external wiring.	No looseness	Tighten loose screws with a Phillips-head screwdriver.
		Check crimp connectors in external wiring.	Adequate spacing between connectors	Check visually and adjust if necessary.
		Check for damaged external wiring cables.	No damage	Check visually and replace cables if necessary.
5	User-serviceable parts	Check whether the battery has reached its service life. CJ1W-BAT01	Valid for 5 years Battery life expectancy is 5 years	Replace the battery when its service life has passed even if a battery error has not occurred. (Battery life depends upon the model, the percentage of time in service, and ambient conditions.)

Tools Required for Inspections

Required Tools

- Slotted and Phillips-head screwdrivers
- Voltage tester or digital voltmeter
- Industrial alcohol and clean cotton cloth

Tools Required Occasionally

- Oscilloscope
- Thermometer and hygrometer (humidity meter)

7-1-2 Unit Replacement Precautions

Check the following after replacing any faulty Unit.

- Do not replace a Unit until the power is turned OFF.
- Check the new Unit to make sure that there are no errors.
- If a faulty Unit is being returned for repair, describe the problem in as much detail as possible, enclose this description with the Unit, and return the Unit to your OMRON representative.
- For poor contact, take a clean cotton cloth, soak the cloth in industrial alcohol, and carefully wipe the contacts clean. Be sure to remove any lint prior to remounting the Unit.

Precautions for Correct Use

- When replacing a CPU Unit, be sure that not only the user program but also all other data required for operation is transferred to or set in the new CPU Unit before starting operation, including DM Area and HR Area settings. If data area and other data are not correct for the user program, unexpected accidents may occur.
- Be sure to include the routing tables, Controller Link Unit data link tables, network parameters, and other CPU Bus Unit data, which are stored as parameters in the CPU Unit. Be sure to set this data again after replacing the CPU Unit.
- Refer to the *CPU Bus Unit and Special I/O Unit operation manuals* for details on the data required by each Unit.

Additional Information

The simple backup operation can be used to store the user program and all parameters for the CJ3 CPU Unit, DeviceNet Units, Serial Communications Units, and other specific Units in a Memory Card as backup files. A Memory Card and the simple backup operation can be used to easily restore data after replacing any of these Units.

Refer to *8-3-7 Data Backed Up Using Simple Backup* for details.

7-2 Replacing the Battery

The Battery in the CJ3M CPU Unit must be replaced periodically as preventative maintenance. This section describes how to replace the Battery.

7-2-1 Battery Replacement

Battery Service Life and Replacement Period

The maximum service life for batteries is five years whether or not power is supplied to the CPU Unit while the battery is installed.

Model	Approx. maximum lifetime	Approx. minimum lifetime*1
CJ3M-CPU□□	5 years	5 year

*1 The minimum lifetime is the clock backup time at an ambient temperature of 0 to 55°C.

Low Battery Indicators

If the PLC Setup has been set to detect a low-battery error, the ERR/ALM indicator on the front of the CPU Unit will flash when the battery is nearly discharged.

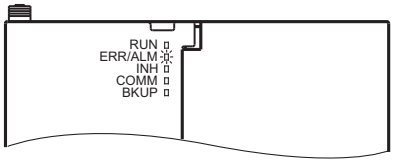

If the Battery Error Flag (A402.04) is ON[*1], first check whether the Battery is properly connected to the CPU Unit. If the battery is properly connected, replace the battery as soon as possible.

Once a low-battery error has been detected, it will take 5 days before the battery fails assuming that power has been supplied at least once a day. “Do Not Detect Low Battery” is set as the default setting in PLC Setup. When a battery is connected, set “Detect Low Battery” to ON (Detect) in PLC Setup.

*1 The Battery Error Flag (A402.04) will turn ON only if the Detect Low Battery parameter in the PLC Setup has been set to detect a low-battery error. If this setting has not been made, battery errors will not be detected.

● Replacement Battery

Use the CJ1W-BAT01 Battery Set.

Precautions for Correct Use

Be sure to install a replacement battery within two years of the production date shown on the battery's label.

Production Date

Manufactured in October 2026.

Replacement Procedure

Use the following procedure to replace the battery when the previous battery has become completely discharged.

Precautions for Safe Use

We recommend replacing the battery with the power OFF to prevent the CPU Unit's sensitive internal components from being damaged by static electricity. The battery can be replaced without turning OFF the power supply. To do so, always touch a grounded piece of metal to discharge static electricity from your body before starting the procedure.

After replacing the battery, connect a Programming Device and clear the battery error.

1 Turn OFF the power to the CPU Unit.

If the CPU Unit has not been ON, turn it ON for at least five minutes and then turn it OFF.

Additional Information

If power is not turned ON for at least five minutes before replacing the battery, the capacitor that backs up memory when the battery is removed will not be fully charged and The CPU Unit has a built-in capacitor to retain the clock data instead of the battery during battery replacement. may be lost before the new battery is inserted.

2 Open the compartment on the upper left of the CPU Unit and carefully draw out the battery.

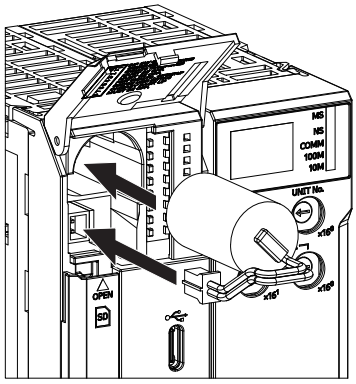

* When inserting the battery, be sure to align the protrusion on the battery to the groove in the battery compartment.

Precautions for Safe Use

- You must complete this procedure within five minutes after turning OFF the power to the CPU Unit to ensure memory backup. Data may be lost if more than five minutes is required.
- Never short-circuit the battery terminals; never charge the battery; never disassemble the battery; and never heat or incinerate the battery. Doing any of these may cause the battery to leak, burn, or rupturing resulting in injury, fire, and possible loss of life or property. Also, never use a battery that has been dropped on the floor or otherwise subject to shock. It may leak.
- UL standards require that batteries be replaced by experienced technicians. Always place an experienced technician in charge or battery replacement.
- Turn ON the power after replacing the battery for a CPU Unit that has been unused for a long time. Leaving the CPU Unit unused again without turning ON the power even once after the battery is replaced may result in a shorter battery life.

Additional Information

The battery error will be cleared automatically the next time the CPU Unit is turned ON after replacing the Battery.

Restrictions When Battery Is Depleted or Not Installed

- The clock data is retained by the built-in capacitor when the battery is depleted or not installed, but the clock data will be unstable if the built-in capacitor is discharged.
  So, Clock Data (A351 to 354 words), Startup Time (A510 to 511 words), Power Interruption Time (A512 to 513 words), Operation Start Time (A515 to 517 words), Operation End Time (A518 to 520 words), Power ON Clock Data (A720 to 749 words), User Program Date (A90 to 93 words), Parameter Date (A94 to 97 words), and Error Occurrence Time of Error Log (A100 to 199 words) values in the Auxiliary Area will be unstable. Also, the date and time of files created by the CPU Unit on Memory Cards will be unstable.
  For the retention time provided by the built-in capacitor, refer to Battery in *3-1-1 CPU Section*.

7-3 Power Supply Unit Replacement Time

Principle of Replacement Notification

The Power Supply Unit has a built-in electrolytic capacitor. The electrolytic capacitor is impregnated with electrolytic solution that starts to penetrate the sealing rubber from the time of manufacture. As time elapses, the internal electrolytic solution continues to evaporate, resulting in decreased electrostatic capacity and deterioration in other characteristics. Over time, the characteristic deterioration of the electrolytic capacitor prevents the Power Supply Unit from being utilized to its full capacity. In particular, the speed at which the electrolytic capacitor deteriorates fluctuates greatly with the ambient temperature (generally, a temperature rise of 10°C will double the rate of a reaction, as stated by Arrhenius' law).

The CJ1W-PA205C Power Supply Unit with Replacement Notification monitors the internal temperature of the Power Supply Unit while the power is turned ON, and calculates the level of deterioration of the electrolytic capacitor from the operating time and internal temperature. The replacement notification function displays the approximate time until the Power Supply Unit will stop functioning at its full capacity due to the characteristic deterioration of the electrolytic capacitor, based on the calculated level of deterioration. When 6 months are remaining until replacement is required, the alarm output will turn OFF.

Note The replacement notification function provides an indication of when the deterioration of the electrolytic capacitor will prevent the power supply functioning at its full capacity. It does not provide information on failures occurring due to other causes.

Power Supply Unit with Replacement Notification

Model	Specifications
CJ1W-PA205C	100 to 240 VAC, Output capacity: 5 A at 5 VDC, 0.8 A at 24 VDC, total of 30 W With replacement notification

Power Supply Unit Replacement Notification Module

- **CJ1W-PA205C**

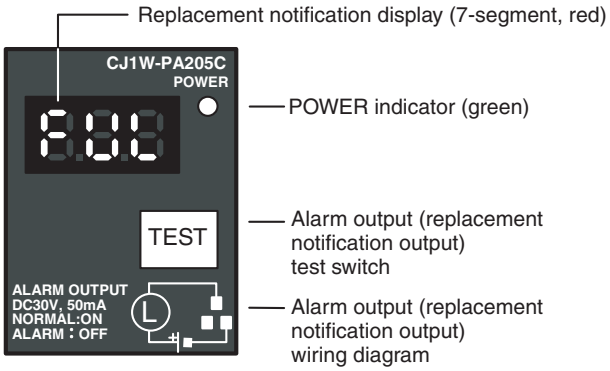

Function

Replacement Notification Function Displays

The replacement notification of the Power Supply Unit is shown using three 7-segment display characters.

- At time of purchase “FUL” is displayed. The display changes to “HLF” as the electrolytic capacitor deteriorates (“HLF” may not be displayed, depending on the operating environment).
- When the time until replacement is required drops below 2 years, the display will change corresponding to the operating time from “1.5” to “1.0” to “0.5” to “0.0”/”A02.” When the remaining service life reaches 6 months or less, the display will alternate between “0.0” and “A02” in 2-second intervals.

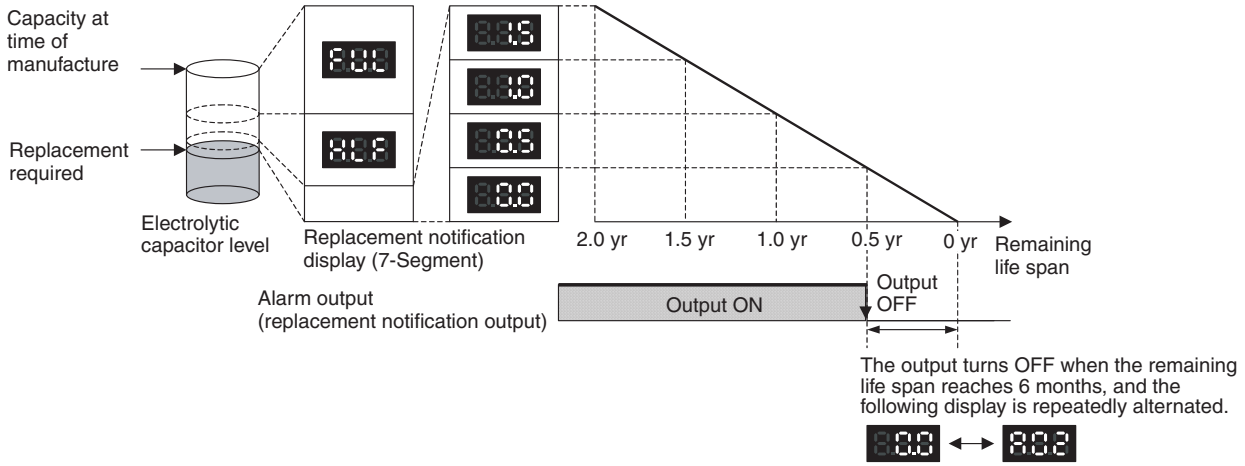

Note 1 The time remaining until replacement does not include periods when the power is turned OFF.

2 Until approximately one month of operating time has accumulated, the display will always be “FUL” and the alarm output will remain ON (conducting) due to the estimated deterioration speed.

3 The time remaining until replacement will vary the operating and storage conditions, so periodically check the display.

4 Fluctuation in the time remaining until replacement may result in the alarm output repeatedly turning ON and OFF.

5 The precision of the replacement notification function will be adversely affected by applications in which the power is frequently turned ON and OFF.

6 Due to the service life of the electronic components, replace the Power Supply Unit approximately 15 years after purchase, even if the replacement notification display or output has not indicated that replacement is required.

Alarm Output (Replacement Notification Output)

The output remains ON until the remaining service life drops below 6 months and then turns OFF.

Note The alarm output will also turn OFF under the following conditions.

- The AC input to the Power Supply Unit is turned OFF.
- An error is detected by the self-diagnostic function.
- The TEST switch is pressed for at least 3 seconds.

Additional Information

Example of Using the Alarm Output:

Monitoring Power Supply Replacement Notification in the System (6 Months or Less Until Replacement Is Required)

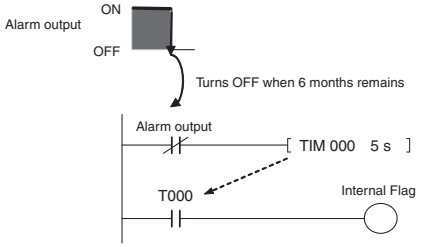

The Flag is programmed to allow for the delay in the alarm output at system startup. The Flag does not turn ON when the alarm output is ON (normal operation). When the alarm output turns OFF (replacement required), the Flag turns ON, and the replacement notification can be monitored from the system.

Maintenance Function Using the TEST Switch

- Press the TEST switch for at least 3 seconds to display “A02” and force the alarm output OFF. Release the switch to return to normal operating status.
  The TEST switch is used initially or periodically to check the connection status between the alarm output and external devices.
- Press the TEST switch for less than 3 seconds to display the unit version information for the Power Supply Unit.

Precautions for Correct Use

- Replace the Power Supply Unit within 6 months when the display on the front panel of the Power Supply Unit alternates between 0.0 and A02 or the alarm output automatically turns OFF.
- Maintain an ambient storage temperature of –20 to 30°C and humidity of 25% to 70% when storing the product (with the power turned OFF) for longer than 3 months to keep the replacement notification function in optimum working condition. The replacement time is calculated from when the power is turned ON only. The precision of the replacement period will decline if the electrolytic capacitor deteriorates during storage.

Display and Alarm Output Operation

Normal Display: Replacement Notification Display

When 6 months or less are remaining until replacement is required, the display will alternate between “0.0” and “A02” (in 2 second intervals), and the alarm output will turn OFF.

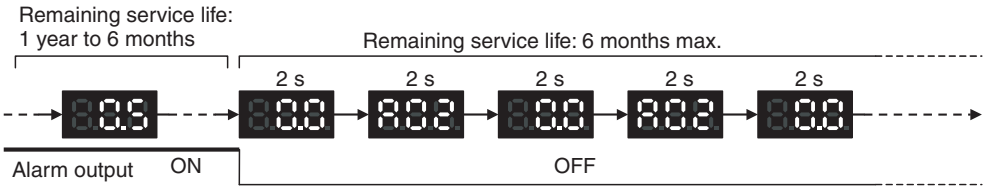

Operation When Turning ON the Power

The following initial display is shown when the power is turned ON, after which the replacement notification is displayed. The alarm output turns ON approximately 0.2 seconds after the power is turned ON.

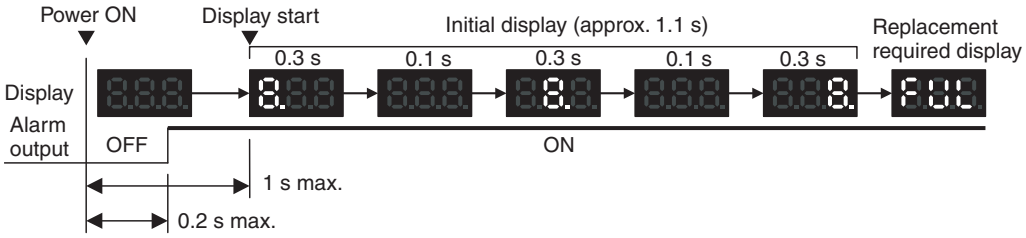

When replacement is already required, the alarm display will follow the initial display. The alarm output will turn ON approximately 0.2 seconds after the power is turned ON, and then turn OFF after approximately 5 seconds.

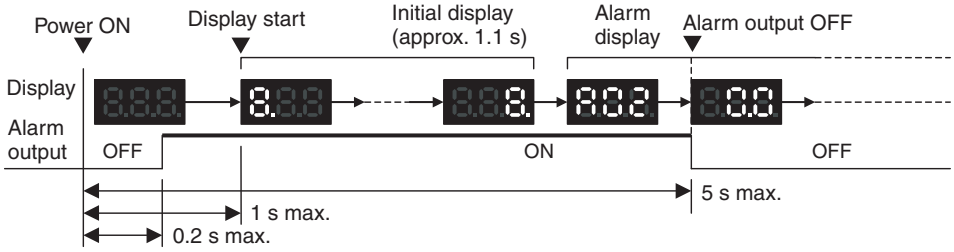

Operation at Power OFF

When the power is turned OFF, the display will turn OFF after the PLC operation stops. The alarm output will turn OFF after the display turns OFF.

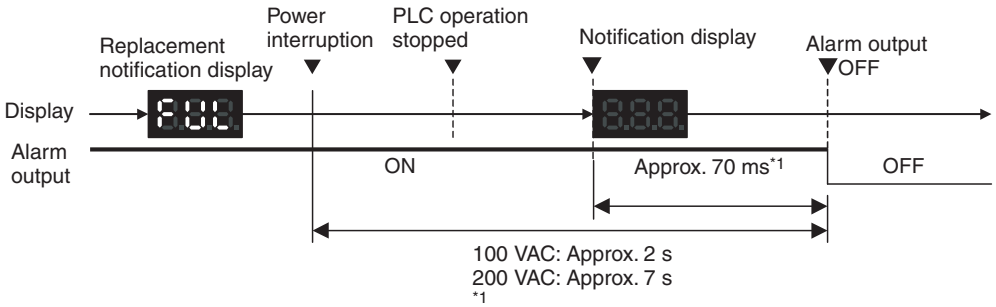

*1 The values shown are reference values (calculated for a no-load status on the Power Supply Unit's output).

If replacement is already required, the display will turn OFF after the PLC operation stops. When the display turns OFF, the alarm output will turn ON momentarily and then turn OFF again.

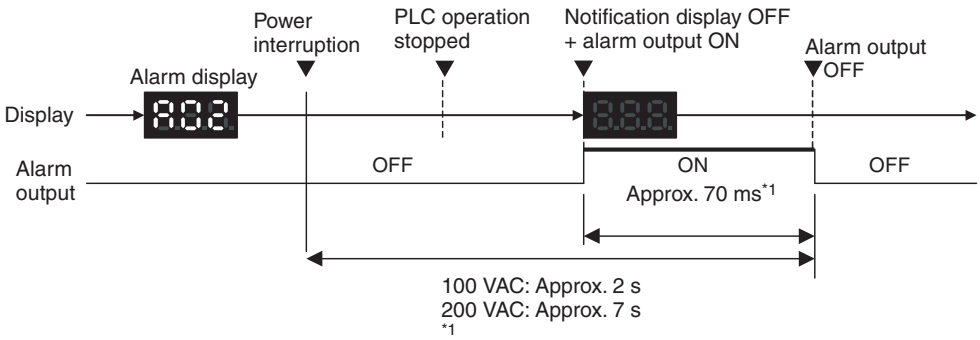

*1 The values shown are reference values (calculated for a no-load status on the Power Supply Unit's output).

Operation When TEST Switch Is Pressed

The following operation will be performed when the TEST switch on the replacement notification function module is pressed. When the switch is pressed for less than 3 seconds, the unit version will be displayed 3 times at 0.5-second intervals. When the switch is pressed for at least 3 seconds, the alarm output will momentarily turn OFF, and the alarm display A02 will be shown. The operation will return to the normal display and output when the switch is released. Use the TEST switch to check the connection between the replacement notification output and devices.

- Operation when TEST switch is pressed for less than 3 seconds.

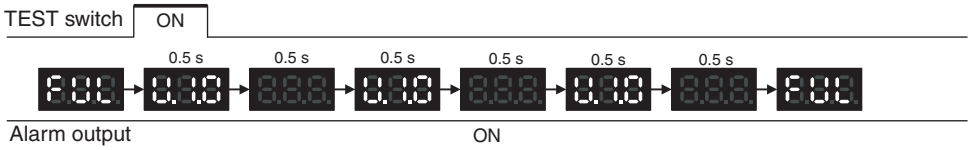

- Operation when TEST switch is pressed for less than 3 seconds.

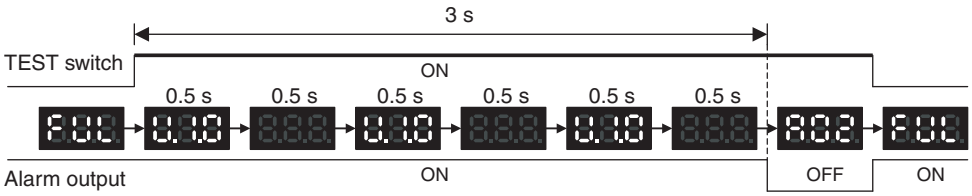

Precautions for Correct Use

Under normal application conditions, the replacement notification function will operate after several years or even tens of years. When using a Power Supply Unit for an extended period of time, periodically check operation with the TEST switch as described above and be sure the alarm output functions properly.

Self-diagnostic Function

Error name	Display	Alarm output status	Error details (cause)	Recovery method
Unit overheated error	Hot	OFF	Internal overheating has occurred in the Power Supply Unit as a result of usage under conditions that exceed the specified values, insufficient ventilation, or incorrect installation.*1	Remove the cause of the overheating error.
Unit error	E03	OFF	System error from external noise or hardware malfunction.	Turn ON the input's power supply again. If the Unit does not recover, the error may be caused by a Unit malfunction. Consult with your OMRON representative.

*1 If the error continues for 3 hours or longer, the replacement notification function will be disabled. Even if the cause of the overheating is removed, the display will continue as “Hot,” and the notification output will remain OFF. In this state, the internal parts may deteriorate even if the PLC operation is normal, so replace the Power Supply Unit.

Comparison between the CJ1W-PA205C and CJ1W-PA205R

Item	CJ1W-PA205C	CJ1W-PA205R (for comparison)
RUN contact output	Not supported	Supported
Terminal block arrangement	CJ1W-PA205C 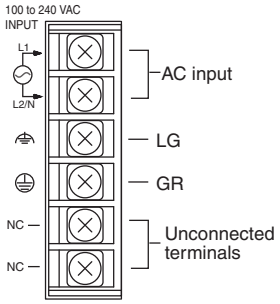 	CJ1W-PA205R 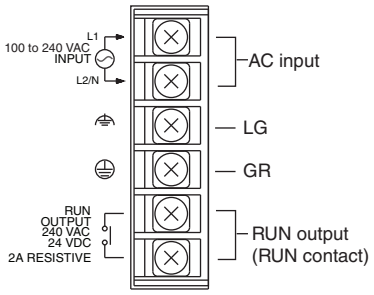
Terminal block position	Located on the left side of the Unit. 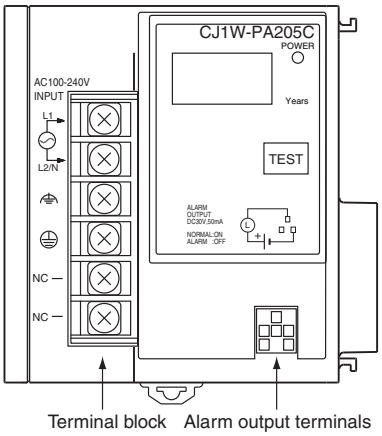 	Located on the right side of the Unit. 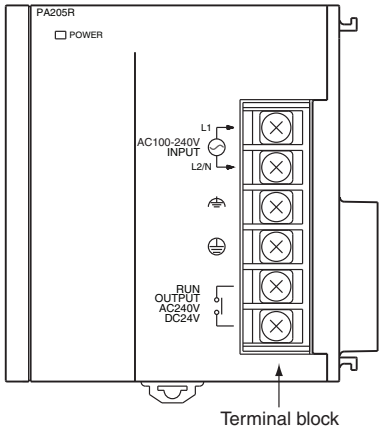
POWER indicator	On replacement notification module	On hood of Power Supply Unit
Replacement notification	Supported (7-segment display + transistor outputs)	Not supported

8

Backup Operations

This section describes operations used to back up and restore data.

8-1 Backing Up Data 8-2

8-2 Using a Computer to Back Up Data 8-3

8-2-1 PLC Backup Tool 8-3

8-2-2 PLC Backup Tool Operations 8-4

8-2-3 Backup File Encryption 8-7

8-3 Simple Backup 8-9

8-3-1 Overview 8-9

8-3-2 Operating Procedures 8-10

8-3-4 Verifying Backup Operations with Indicators 8-13

8-3-5 Related Auxiliary Bits/Words 8-15

8-3-6 Time Required for Simple Backup 8-15

8-3-7 Data Backed Up Using Simple Backup 8-16

8-1 Backing Up Data

There are two methods for backing up PLC data.

Using a Computer to Back Up Data to the Computer

- Operation: PLC Backup Tool running on the personal computer
- Backup destination: Computer hard disk

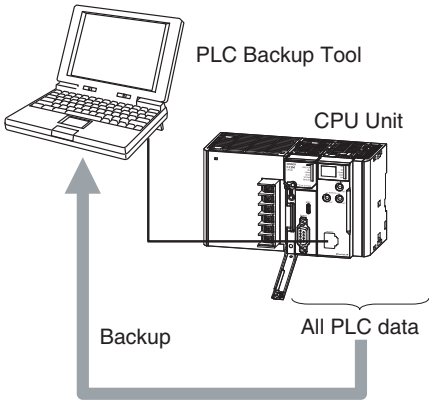

Using Front-panel Switches on the CPU Unit to Back Up Data to a Memory Card

- Operation: DIP switch and Memory Card Power Switch
- Backup destination: A Memory Card inserted in the CPU Unit

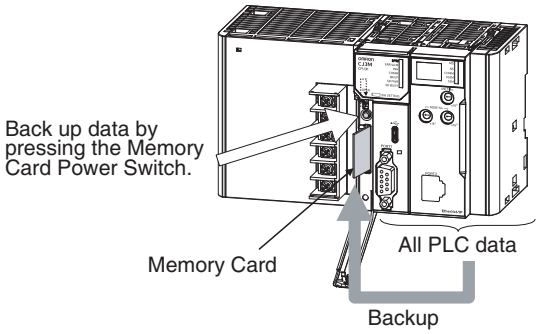

8-2 Using a Computer to Back Up Data

8-2-1 PLC Backup Tool

The PLC Backup Tool can be used to back up, compare, and restore data, such as programs and unit parameters, of all the Units or of only specified Units in a PLC that is connected online.

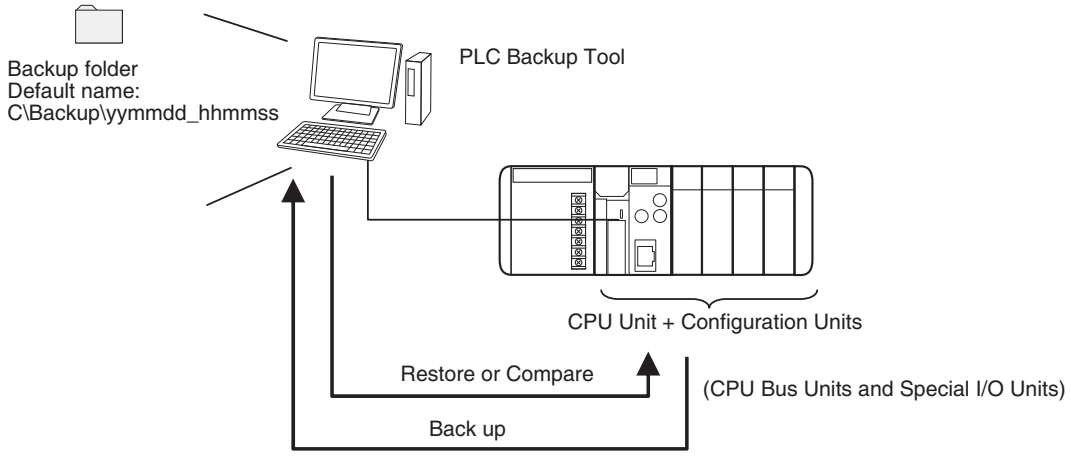

● Applications

The PLC Backup Tool can be used for the following applications.

- Backing up all of the data from the PLC
- Comparing all of the data in the PLC with the data backed up in the computer
- Transferring all of the data to a PLC that has the same system configuration as another PLC
- Transferring data to a Unit that has been replaced, e.g., when the Unit has failed

● Applicable Units

Applicable Unit	Description
CPU Unit	CS/CJ/CP-series PLCs, all models and all versions Data in the following Units is not backed up: • SYSMAC SPU Unit data
Special I/O Units and CPU Bus Units	Refer to the list of backup Units in the help files for the PLC Backup Tool.

● Applicable Data

Applicable Unit	Description
CPU Unit	User program, symbols tables, rung comments, program index, parameters (PLC Setup, registered I/O tables, routing tables, Ethernet settings, and all other data in the initial setting areas), I/O memory, forced status (backup and comparison only), and EM file memory data (backup only)
Special I/O Units and CPU Bus Units	Parameter settings and data stored inside the Unit (e.g., programming created with Support Software)

● Restrictions

The following restrictions apply.

- Forced Status
  Forced status cannot be restored. If you attempt to restore forced status, the address of the force-set/reset bits will be displayed in the log display area. Use the CX-Programmer or Switch Box to manually force-set/reset the displayed bits.
- Data Stored in EM File Memory (Part of the EM Area Converted to File Memory)
  EM file memory cannot be compared or resorted.
  EM file memory backups are saved in the CPU\EM_FILES Folder that will be created within the backup file destination folder. Restore EM file memory manually by using the PLC Memory Card Window in the CX-Programmer to write the data to memory.
- Restrictions in Comparing and Restoring I/O Memory
  The CIO Area and Auxiliary Area data in the I/O memory cannot be compared or restored.

8-2-2 PLC Backup Tool Operations

An overview of the PLC Backup Tool is provided below. For details on specific procedures and functions, refer to the *CX-Programmer Operation Manual* (Cat. No. W446).

● Starting the PLC Backup Tool

Either of the following methods can be used to start the PLC Backup Tool.

- Select ***PLC Backup Tool*** from the CX-Programmer Tools Menu.
- Select ***Programs*** – ***OMRON***– ***CX-One*** – ***CX Programmer*** – ***PLC Backup Tool*** from the Windows Start Menu.

The PLC Backup Tool Dialog Box will be displayed.

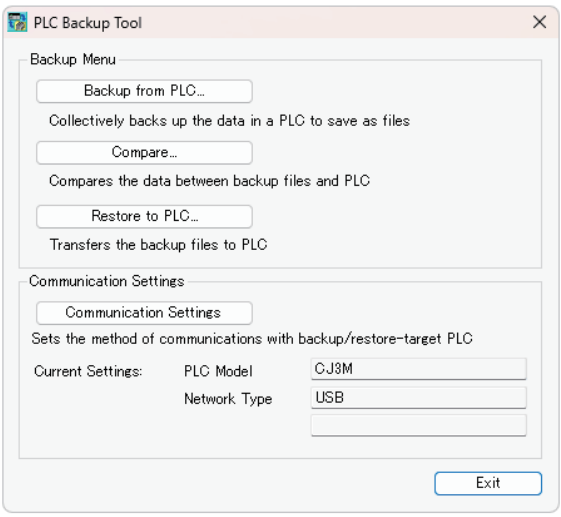

● Backing Up Data

The data in the connected PLC can be backed up to the computer as a batch. A folder named with the date and time will be automatically created under the user-specified folder, and the backup files will be created in that folder.

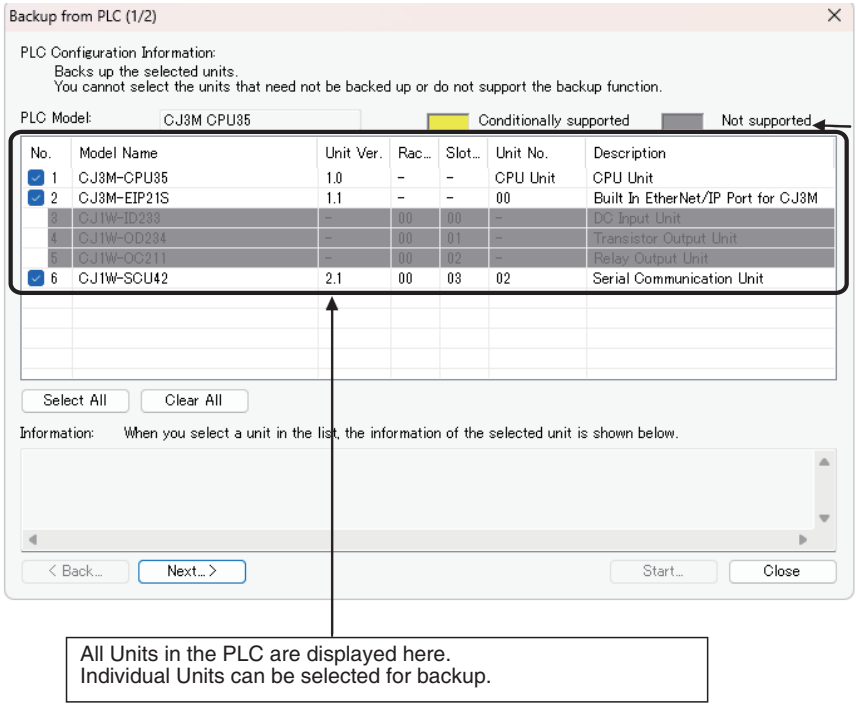

● Comparing Data

Data in backup files can be compared with data from other backup files or data from connected PLC. The comparison results will be displayed.

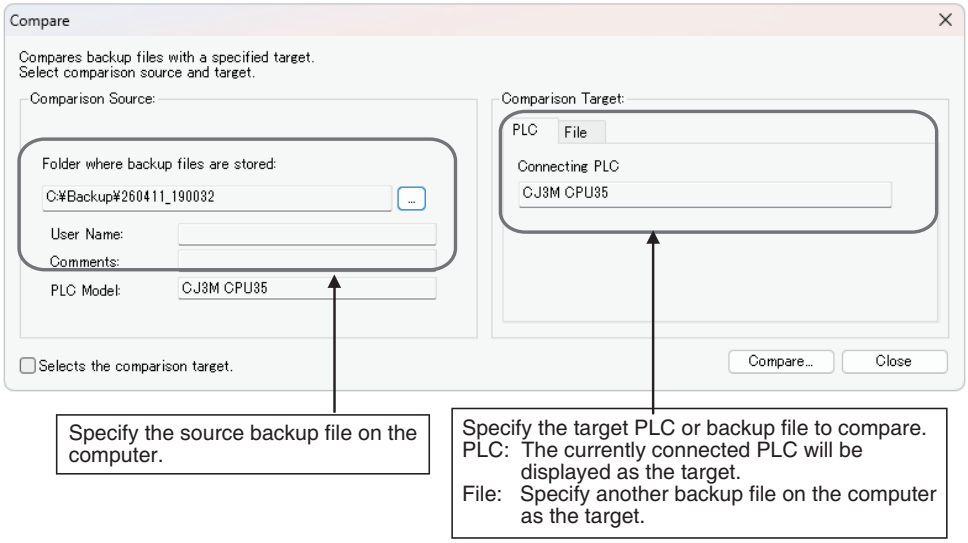

Backup files can be restored after the comparison results have been displayed. Also, the comparison results can be saved in a CSV file.

● Restoring Data

PLC data can be restored to a previous state by transferring backup file data to a connected PLC. Before the data is restored, a comparison will be made automatically with the applicable PLC and the results will be displayed.

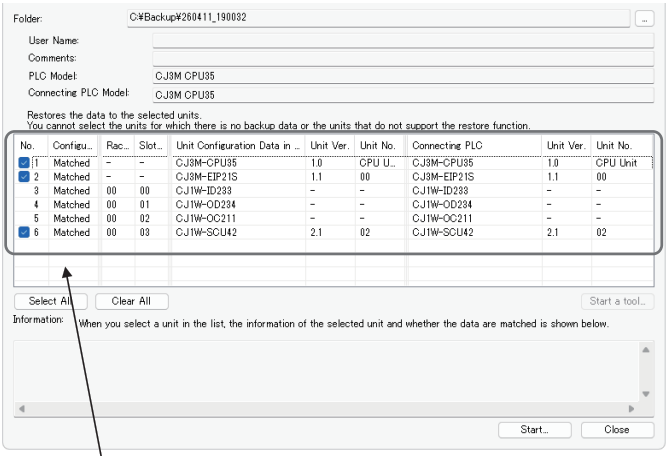

□: Check boxes will appear for Units to which data can be restored.
Configuration: Indicates whether the configurations match between the backup file and the PLC.

Before the data is restored, the contents of the data can be checked by starting the Support Software for that Unit.

Precautions for Correct Use

The CPU Unit will be changed to PROGRAM mode before restoring the data. This will stop operation. Be sure it is safe to stop CPU Unit operation before restoring the data.

Precautions for Safe Use

- Sufficiently check the data that is selected for restoring before performing the next step. If the correct data is not restored, unexpected operation may occur in the controlled system after the data is restored.
- Some Special I/O Units and CPU Bus Units operate with parameters that are stored in the CPU Unit. If one of these Units is selected for backup, restrictions will be displayed in the Comments Area of the Backup from PLC Dialog Box. Confirm the restrictions, and always select the Special I/O Unit or CPU Bus Unit together with the CPU Unit when backing up or restoring data. If the data from both Units is not backed up or restored together, unexpected operation may occur in the controlled system.
- If there are any backup restrictions for the Units to which data is being restored, the restrictions will be displayed in the Comments Area of the Backup from PLC Dialog Box. Confirm the restrictions, and always take the required measures. If required measures are not taken, unexpected operation may occur in the controlled system after the data is restored.
- Confirm that stopping PLC operation will not create any problems before restoring data during PLC operation. If the PLC stops at an unanticipated time, unexpected operation may occur in the controlled system.
- Always turn the power supply to the PLC OFF and then ON after restoring data. If the power supply is not turned OFF and then ON, memory in the PLC may not be updated to the restored data, which may cause unexpected operation of the controlled system.
- Forced status can be backed up, but it cannot be restored. If you restored data that contained forced status, use the CX-Programmer after restoring the data to force-set or force-reset bits as required. If required bits are not force-set or force-reset, differences in the forced status in memory may cause unexpected operation of the controlled system.

8-2-3 Backup File Encryption

The backup files can be encrypted by the PLC Backup Tool.

● Password Setting During Backup

Select the Encrypt File Check Box at the bottom of the screen below.

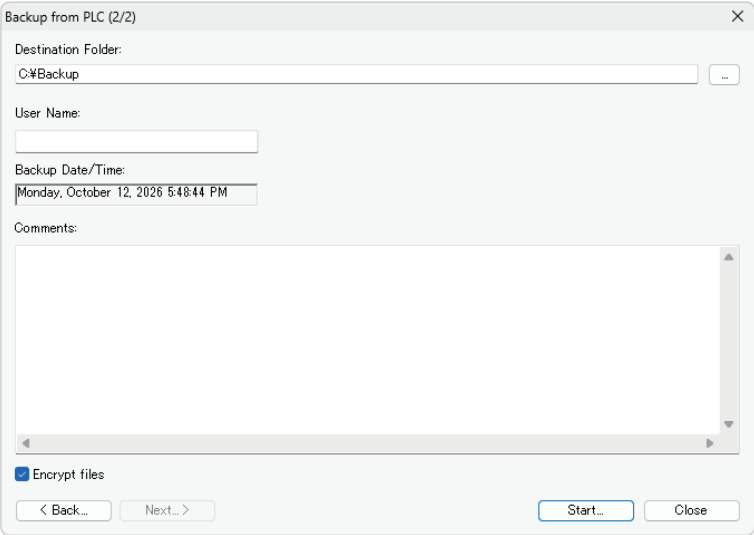

When the backup starts, the Password Setting screen is displayed.

Set a password for encryption.

Note The password set here differs from the password for the file encryption setting of the CJ3M CPU Unit.

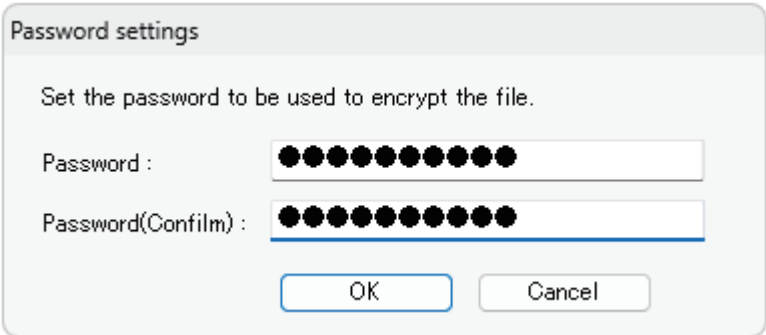

● Password Input for Restore/Compare Operation

When an encrypted backup file is restored or compared, the Password Input screen is displayed.

Enter the password that was set during backup.

Note When file encryption is enabled, the backed up files will be encrypted.
Encrypted backup files can be restored only on a CPU Unit encrypted with the same password.

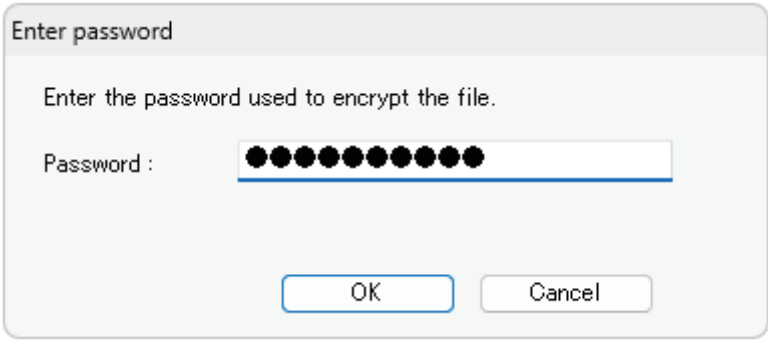
Enter password
Enter the password used to encrypt the file.
Password :
OK
Cancel

8-3 Simple Backup

8-3-1 Overview

The simple backup operation can be used to back up all PLC data to a Memory Card, or to restore or compare the data, by using a simple DIP switch setting and the Memory Card Power Supply Switch. No Support Software is required.

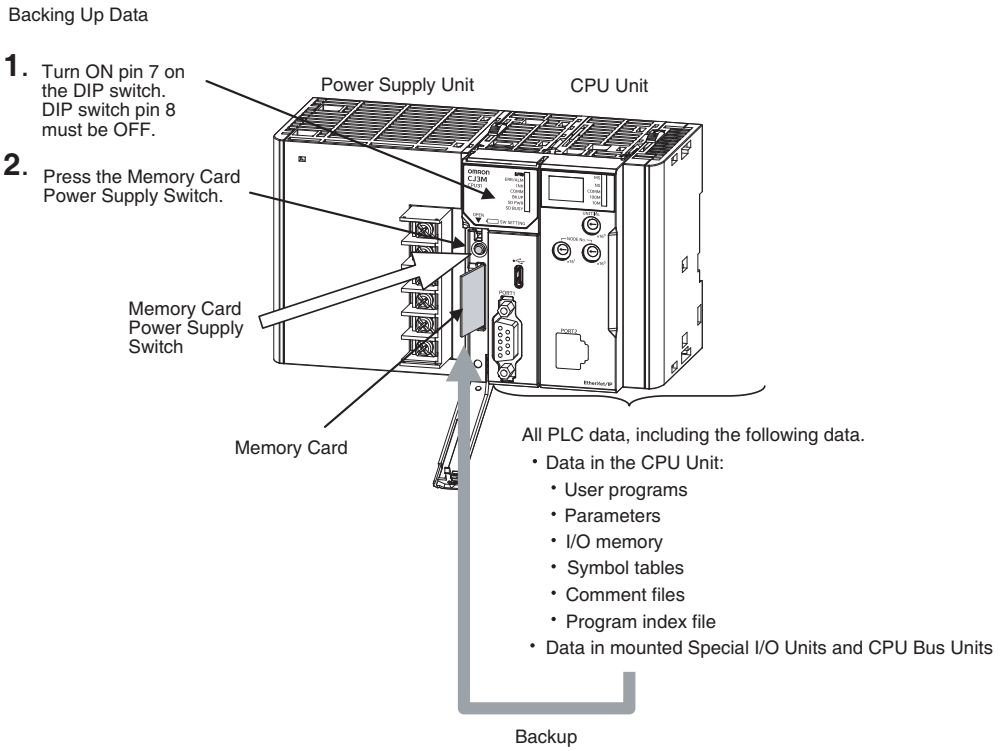

Backup operation	DIP switch on front of CPU Unit	Procedure	
	Pin 7/Pin 8		
Backing up data to the Memory Card	ON/OFF	Press the Memory Card Power Supply Switch for three seconds.	The data can be backed up regardless of the CPU Unit operating mode.
Restoring data from the Memory Card		Turn the PLC OFF and ON again. (Data restoration is given priority over the automatic transfer at startup.)	After the data has been restored, the operating mode will remain in PROGRAM mode until the PLC power is turned OFF.
Comparing data to the Memory Card	OFF/OFF	Press the Memory Card Power Supply Switch for three seconds.	The data can be compared regardless of the CPU Unit operating mode.

The following Memory Cards can be used on the CJ3 CPU Unit.

Model	Specifications
HMC-SD29□	SD card, 2 GB
HMC-SD49□	SDHC card, 4 GB
HMC-SD1A□	SDHC card, 16 GB

8-3-2 Operating Procedures

Backing Up Data from the CPU Unit to the Memory Card

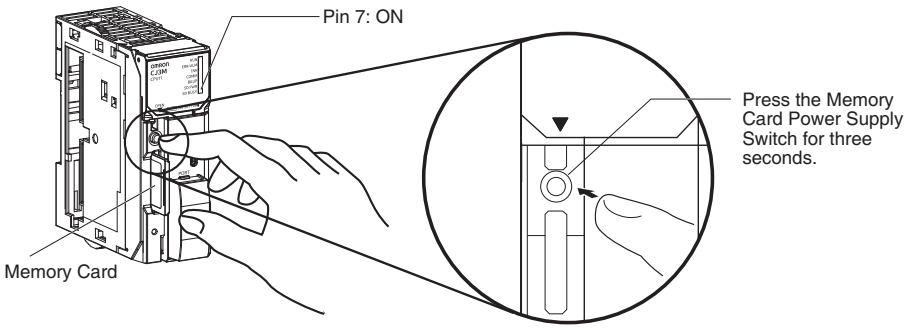

1 Insert the Memory Card into the CPU Unit.

The SD PWR indicator will light and the SD BUSY indicator will flash (meaning the Memory Card is being accessed) and then turn OFF.

2 Turn ON pin 7 on the CPU Unit's DIP switch.

DIP switch pin 8 must be OFF.

3 Press the Memory Card Power Supply Switch for three seconds until the SD BUSY indicator lights, and then release the switch.

4 The PLC will start backing up data to the Memory Card.

The SD PWR indicator will flash once and then light while the data is being written. At the same time the SD BUSY indicator will flash.

5 The SD PWR and SD BUSY indicators will both turn OFF when the operation is completed normally.

6 Turn OFF pin 7 on the CPU Unit's DIP switch.

When file encryption is enabled, the backed up files will be encrypted.

Encrypted backup files can be restored only on a CPU Unit encrypted with the same password.

For details on file encryption, refer to CJ-series CJ2/CJ3 CPU Unit Software User’s Manual (Cat. No. W473) 10-6-7 File Encryption Function.

Restoring Data from the Memory Card to the CPU Unit

1 Turn OFF the PLC power supply.

2 Insert the Memory Card containing the backup files into the CPU Unit.

3 Turn ON pin 7 on the CPU Unit's DIP switch.

DIP switch pin 8 must be OFF.

4 Turn ON the PLC power supply.

The PLC will start restoring the data from the Memory Card. The SD PWR indicator will flash once and then light while the data is being read. At the same time the BUSY indicator will flash.

5 The SD PWR and SD BUSY indicators will both turn OFF when the operation is completed normally.

If the SD PWR indicator flashes five times, or if only the SD BUSY signal turns OFF, it means that an error has occurred. (Refer to *8-3-4 Verifying Backup Operations with Indicators*.)

6 Turn OFF pin 7 on the CPU Unit's DIP switch.

Note 1 The backup function will override the automatic transfer at startup function, so the backup files will be read to the CPU Unit when the PLC is turned ON even if pin 2 of the DIP switch is ON.

2 Data will not be read from the Memory Card to the CPU Unit if pin 1 of the DIP switch is ON (write-protecting program memory).

3 To restore backup data read from a CPU unit enabled file encryption, you must set the file encryption and same password of the backuped CPU unit.

Additional Information

- When the backup files are read from the Memory Card by the backup function, the status of I/O memory and force-set/force-reset bits will be cleared unless the necessary settings are made in the Auxiliary Area and PLC Setup.
  If the IOM Hold Bit (A500.12) is ON and the PLC Setup is set to maintain the IOM Hold Bit Status at Startup when the backup files are written, the status of I/O memory data will be maintained when data is read from the Memory Card.
  If the Forced Status Hold Bit (A500.13) is ON and the PLC Setup is set to maintain the Forced Status Hold Bit Status at Startup when the backup files are written, the status of force-set and force-reset bits will be maintained when data is read from the Memory Card.
- After the simple backup operation has been used to restore data from the Memory Card to the PLC, the operating mode will remain in PROGRAM mode and cannot be changed to MONITOR or RUN mode until the PLC power is turned OFF. After restoring the data, turn OFF the power, change the setting of DIP switch pin 7, and then turn the power back ON.
- File backups may take from several seconds to several minutes. For information on execution times refer to *8-3-6 Time Required for Simple Backup*.
- The simple backup is designed for transferring data between two systems with the same unit configuration. If a CPU Unit of a different model is used, there are cases where data cannot be transferred with the simple backup.

Comparing Data in the Memory Card and CPU Unit

1 Insert the Memory Card containing the backup files into the CPU Unit.

The SD PWR indicator will light and the SD BUSY indicator will flash and then turn OFF.

2 Turn OFF pin 7 on the CPU Unit's DIP switch.

DIP switch pin 8 must be OFF.

3 Press the Memory Card Power Supply Switch for three seconds until the SD BUSY indicator lights, and then release the switch.

The PLC will start comparing the data in the PLC and the data in the backup file on the Memory Card. The SD PWR indicator will flash once and then light while the data is being written. At the same time the SD BUSY indicator will flash.

The SD PWR and SD BUSY indicators will both turn OFF if the data matches. If the SD PWR and SD BUSY indicators both flash, it means that the data does not match or that an error has occurred. (Refer to *8-3-4 Verifying Backup Operations with Indicators*.)

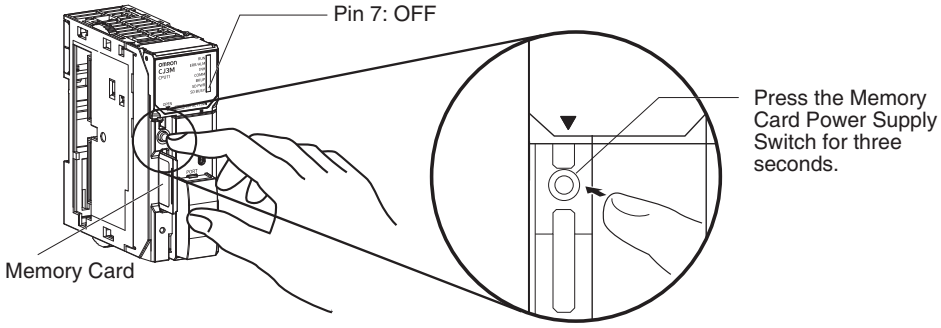

Note If an error occurs during writing or comparison, the SD PWR indicator will flash. Press the power supply switch to stop the flashing and to turn ON the SD PWR indicator.
To restore backup data backed up from a CPU Unit that has file encryption enabled, file encryption must be enabled on the CPU Unit with the same password as that of the CPU Unit that was backed up.
For details on file encryption, refer to CJ-series CJ2/CJ3 CPU Unit Software User's Manual (Cat. No. W473) 10-6-7 File Encryption Function.

8-3-3 Verifying Backup Operations with Indicators

The correspondence between the file encryption setting and backup/restore/compare is as follows.

If the file encryption setting and password do not match, the restore and compare operations will terminate abnormally.

		File encryption setting of CPU Unit to restore/compare	
		Enabled	**Disabled**
File encryption setting of backed up CPU Unit	**Enabled**	Supported (*)	Not supported
	Disabled	Not supported	Supported

* The restore and compare operations are possible only when the password of the file encryption setting matches.

8-3-4 Verifying Backup Operations with Indicators

The status of the Memory Card Power (SD PWR) indicator shows whether a simple backup operation has been completed normally or not.

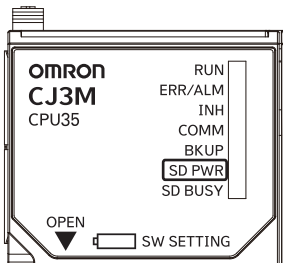

Backup operation	Normal completion*1	Error occurred	
	SD PWR status	SD PWR status	Error
Backing up data from the CPU Unit to the Memory Card	SD PWR Lit ↓ Remains lit while the Memory Card Power Switch is pressed. ↓ SD PWR Flashes once. ↓ SD PWR Lit while writing. ↓ SD PWR OFF after data is written.	SD PWR Lit ↓ Remains lit while the Memory Card Power Switch is pressed. ↓ SD PWR Remains flashing.	The data was not backed up due to one of the following errors, and no backup file was created. • Insufficient Memory Card capacity • Memory error in CPU Unit • I/O bus error • Data was not read from the Unit to be backed up. • The LOCK switch of the SD Memory Card is set to ON. • A backup file already exists and is write-protected (read-only). • The LOCK switch of the SD Memory Card is set to ON. • A backup file already exists and is write-protected (read-only).

Backup operation	Normal completion*1	Error occurred	
	SD PWR status	SD PWR status	Error
Restoring data from the Memory Card to the CPU Unit	SD PWR Lit when power is turned ON. ↓ SD PWR Flashes once. ↓ SD PWR Lit while reading. ↓ SD PWR OFF after data is read.	SD PWR Lit when power is turned ON. ↓ SD PWR Flashes five times. ↓ SD PWR Goes OFF.	The data was not restored due to one of the following causes. • Program in Memory Card exceeds CPU Unit capacity • Required backup files do not exist in Memory Card. • Program can't be written because it is write-protected (Pin 1 of the DIP switch is ON.) • The EM file was not complete, i.e., a portion was missing. • There are fewer CPU Unit EM banks than backup EM files. • The file encryption setting does not match or the pass-word of the file encryption setting differs.
		SD PWR Lit when power is turned ON. ↓ SD PWR Flashes once. ↓ SD PWR Remains lit.	The I/O tables are not correct (e.g., the same unit number was set twice).
		SD PWR Same as for normal completion. + Special I/O or CPU Bus Unit ERR indicator H8 7-segment LED indicator Displayed as “H8”	• A Unit was added to the configuration since the data was backed up. • The unit number settings for Special I/O Units or CPU Bus Units are not correct.
Comparing data between the CPU Unit and the Memory Card	SD PWR Lit ↓ Remains lit while the Memory Card Power Switch is pressed. ↓ SD PWR Flashes once. ↓ SD PWR Lit while comparing. ↓ SD PWR OFF after data is compared.	SD PWR Lit ↓ Remains lit while the Memory Card Power Switch is pressed. ↓ SD PWR Remains flashing.	The following comparison errors can occur: • Memory error in CPU Unit*2 • Incorrect I/O tables (e.g., the same unit number set twice) • Comparison results (of backup files on Memory Card and data in PLC) do not match. • Required backup files do not exist in Memory Card.*2 • I/O bus error • The file encryption setting does not match or the pass-word of the file encryption setting differs.

*1 When the backup operation is completed normally, power to the Memory Card will go OFF when the SD PWR indicator goes OFF. If the Memory Card will be used again, press the Memory Card Power Switch to supply power and execute the desired operation.

*2 The backup files for Units and Boards are also compared.

8-3-5 Related Auxiliary Bits/Words

Name	Address	Description
File Memory Operation Flag	A343.13	ON when any of the following are being performed. OFF when execution has been completed. • Memory Card detection • CMND instruction executed for local CPU Unit • FREAD/FWRIT instructions • Program replacement via special control bits • Simple backup operation Wiring data to or verifying the contents of the Memory Card is not possible while this flag is ON.
EM File Memory Starting Bank	A344	When the CPU Unit starts reading from the Memory Card, it references this value. If the maximum EM bank number of the BKUPEM□.IOM files (maximum consecutive bank number counting from 0) matches the maximum bank number of the CPU Unit, the EM area will be formatted based on the value in this word. If the maximum EM bank numbers do not match, the EM Area will revert to its unformatted condition.

8-3-6 Time Required for Simple Backup

The following tables list the benchmark execution times for the simple backup operation. The execution time will depend on the Unit configuration, cycle time, and Memory Card. These times were measured under the following conditions:

CPU Unit Model: CJ3M-CPU35

Configuration: CPU Unit only

No file encryption setting

Operating mode	Writing to Memory Card	Reading from Memory Card
User program: 100K steps, No network symbols (tags)	Approx. 10 s	Approx. 15 s
User program: 100K steps, 10,000 network symbols (tags)	Approx. 30 s	Approx. 32 s

Additional Information

The Units that are backed up for the simple backup operation are predetermined. You cannot specify which Units are backed up and which are not.

8-3-7 Data Backed Up Using Simple Backup

The files and applicable data transferred between the Memory Card and CPU Unit using the simple backup operation are listed below. The file name is fixed as BACKUP□□.
The files in the following tables with "Yes" in the "Required" column must be stored in the memory card when using the simple backup to restore the data from the memory card to the CPU Unit.

Program Files

Contents	Backup	Restore	Compare	File name	Extension	Required
• User program • Network symbols*	Yes	Yes	Yes	BACKUP	.OBJ .OBS*1	Yes

Symbol Tables, Comments, and Program Index Files

Contents	Backup	Restore	Compare	File name	Extension	Required
Symbol table files	Yes	Yes	Yes	BKUPSYM	.SYM .SBS*1	No
Comment files				BKUPCMT	.CMT .CMS*1	No
Program index file				BKUPPRG	.IDX .IDS*1	No

Parameter Files

Contents	Backup	Restore	Compare	File name	Extension	Required
• PLC Setup • PLC name • Registered I/O tables • Routing tables • CPU Bus Unit setup • Etc.	Yes	Yes	Yes	BACKUP	.STD .STS*1	Yes

Data

There are five types of data files, as shown below, when the simple backup operation is used for backing up data (creating files) on the Memory Card or for restoring or comparing data from the Memory Card.

- BACKUP.IOM
- BKUPIOR.IOR
- BACKUPDM.IOM
- BKUPEM□.IOM
- BKUPEF□.IOM

These files are used exclusively for the simple backup operation. With the exception of BKUPIOR.IOR, they can all be manipulated from the CX-Programmer. (BKUPIOR.IOR files cannot be manipulated.)

I/O memory		Backup	Restore	Compare	File name	Extension	Required
Area	Addresses						
DM Area	D20000 to D32767	Yes	Yes	No	BACKUP	.IOM .IOS*6	Yes
CIO Area	CIO 0000 to CIO 6143 (Includes forced status.)	Yes	--- (See note 3.)	No	BAUPIOR	.IOR .IRS*6	Yes
Work Area	W000 to W511 (Includes forced status.)	Yes	--- (See note 3.)	No			
Holding Area	H000 to H511	Yes	Yes	No			
Auxiliary Area	A000 to A447, A10000 to A11135	Yes	---	---			
	A448 to A1472	Yes	Yes	No			
Timer Completion Flags and Timer PVs	T0000 to T4095	Yes	--- (See note 3.)	No			
Counter Completion Flags and Counter PVs	C0000 to C4095	Yes	Yes	No			
DM Area	D00000 to D19999	Yes	Yes	No	BACK-UPDM	.IOM .IOS*6	Yes
EM Area (See notes 1 and 2.)	E□_0 to E□_32767 (□: Bank No. 0 to 9 hex. The maximum bank number depends on the CPU Unit model.)	Yes	Yes	No	BKU-PEM0□	.IOM .IOS*6	No
EM Area (forced status) (See note 4.)	When bits are force-set/reset	Yes	Yes	No	BKU-PEF0□	.IOM .IOS*6	No

Note 1 If the number of banks in the EM data on the Memory Card is less than the number of EM banks in the CPU Unit where the data is to be restored (e.g., if data backed up by the CJ3M-CPU31 is to be restored at the CJ3M-CPU35), the amount of EM data on the Memory Card will be restored. On the other hand, if the number of banks in the EM data on the Memory Card is greater than the number of EM banks in the CPU Unit where the data is to be restored (e.g., if data backed up by the CJ3M-CPU35 is to be restored at the CJ3M-CPU31), it will not be possible to restore the data.

2 When the EM file memory function is used, the EM file memory will be restored only if the backup data is restored to a CPU Unit of the same model. If it is restored to a CPU Unit of a different model, the data will not function as EM file memory.

3 The BKUPIOR.IOR file will be cleared when data is restored from the Memory Card at startup. If, however, the IOM Hold Bit (A500.12) is ON and the IOM Hold Bit Startup Hold Setting in the PLC Setup is set to hold the setting of the IOM Hold Bit, the CIO and Work Area data and Timer Completion Flags and PVs will be held without being cleared from the Memory Card at startup.

4 If the Forced Status Hold Bit (A500.13) is ON and the Forced Status Hold Bit Startup Hold Setting in the PLC Setup is set to hold the setting of the Forced Status Hold Bit, the forced status will be held without being cleared when restored from the Memory Card at startup, to a CPU Unit of the same model. If the data is restored to a CPU Unit of a different model, the status will not be held.

Unit Backup Data

When CPU Bus or Special I/O Units that support the simple backup function are connected to the CPU Unit, the data in the CPU Bus or Special I/O Units will also be backed up by the simple backup operation. Data in the CPU Bus and Special I/O Units is backed up separately for each Unit.

Contents	Backup	Restore	Compare	File name	Extension	Required
Data in Unit with unit address □□ (The contents depend on the Unit.)	Yes	Yes	Yes	BACKUP □□	.PRM	Yes

Note If the file does not exist when restoring data from the Memory Card to I/O memory, an error will not occur at the CPU Unit but the data will not be restored to the CPU Bus or Special I/O Unit and an error will occur at the CPU Bus or Special I/O Unit. For details on errors that occur at a CPU Bus or Special I/O Unit, refer to the operation manual for the specific Unit.

Data in individual Units is saved to the Memory Card under the following file names.

File name: BACKUP□□.PRM

Unit address of Unit/Board (hex)

Note The unit address is determined as follows:

- Built-in EtherNet/IP (CJ3M-CPU3□) or CPU Bus Unit: Unit number + 10 hex
- Special I/O Unit: Unit number + 20 hex

In order for data in a Unit to be backed up, that Unit must support the simple backup function. Refer to the operation manual for the specific Unit to check whether this function is supported.

Applicable Units	Model numbers	Data backed up for simple backup	Data capacity used in Memory Card
Serial Communications Units	CJ1W-SCU21/22/32/41/42 CJ1W-SCU21/31/41-V1	Protocol macro data (Including both standard system protocols and user-defined protocols from the flash memory in the Unit or Board)	129 Kbytes
FL-net Units	CJ1W-FLN22	Data link tables	1.3 Kbytes
DeviceNet Units	CJ1W-DRM21	Device parameters (all data in EEPROM in the Unit) (Although this is the same data as is backed up from the Memory Card backup function supported by the Unit or the DeviceNet Configuration (Ver. 2.□), there is no file compatibility.)	7 Kbytes
CompoNet Units	CJ1W-CRM21	• Registration tables • Software settings • Network parameters • Slave parameters	3.5 Kbytes
Motion Control Units	CJ1W-MCH71	• Positioning data • System parameters • G-language programming	8,192 Kbytes

Applicable Units	Model numbers	Data backed up for simple backup	Data capacity used in Memory Card
Position Control Units	NC271/471/F71 (-MA)	• Common parameters • Individual axis parameters	64 Kbytes
	CJ1W-NC113/133/213/233/413/433	• Axis parameters • Sequence data • Speed data • Acceleration/deceleration time data • Dual timer data • Zone data	7 Kbytes
	CJ1W-NC214/234/414/434	• Common parameters • Axis parameters • Memory operation parameters • Memory operation data • Memory operation conditions data	220 Kbytes
	CJ1W-NC281/481/881/F81/482/882/F82	• Common parameters • Axis parameters • Memory operation parameters • Memory operation data • Memory operation conditions data • Communications parameters	2,560 Kbytes
EtherNet/IP Unit	CJ1W-EIP21	• Unit settings • Tag data link settings	459 Kbytes
	CJ1W-EIP21S	• Unit settings • Tag data link settings • User authentication setting	364 Kbytes

Precautions for Correct Use

When using a simple backup file to restore data, use a CPU Unit of the same model as the backup source. If a CPU Unit of a different model is used, the following operations will result.

- If the number of EM banks for the simple backup file is greater than that of the CPU Unit where the data is to be restored, the data will not be restored.
- If the number of EM banks for the simple backup file is less than that of the CPU Unit where the data is to be restored, the data in the EM bank areas in the simple backup file will be restored, but forced status will not be restored. In addition, EM banks that are not in the simple backup file will retain their values from before the restoration.

App

Appendices

The appendices provide Unit specifications, Unit dimensions, details on fatal and non-fatal errors, information on connecting to serial ports on the CPU Unit, the procedure for installing the USB driver on a personal computer, and information on load short-circuit protection and line disconnection detection.

A-1 Specifications of Basic I/O Units A-3

A-1-1 Overview of Units A-3

A-1-2 Basic I/O Units A-5

A-1-3 Precautions on Contact Output Units A-62

A-1-4 Connecting Connector-Terminal Block Conversion Units and I/O Relay Terminals A-64

A-2 Dimensions A-83

A-2-1 CJ3M CPU Units A-83

A-2-2 Power Supply Units A-84

A-2-3 Basic I/O Units A-86

A-2-4 I/O Control Unit and I/O Interface Unit A-89

A-2-5 I/O Memory Card A-89

A-2-6 Pulse I/O Modules A-89

A-2-7 B7A Interface Unit A-90

A-3 Fatal and Non-fatal Error Details A-91

A-3-1 Fatal Errors A-91

A-3-2 Non-fatal Errors A-99

A-4 Connecting to a Serial Port on the CPU Unit A-102

A-4-1 Serial Port Interface Types and Specifications A-102

A-4-2 Connection Examples A-107

A-4-3 Applicable Connectors and Recommended Cables A-114

A-5 Load Short-circuit Protection and Line Disconnection Detection for Basic I/O Units A-121

A-5-1 Load Short-circuit Protection and Line Disconnection Detection for CJ1W-OD202 . . . . . A-121

A-5-2 Load Short-circuit Protection for CJ1W-OD204/OD212/OD232/MD232 . . . A-123

A-6 Relay Output Noise Reduction Methods A-125

A-7 Deleting Data when Disposing of the Unit A-127

A-7-1 Target and Data to Delete A-127

A-7-2 Deleting the Data of the CPU Function A-127

A-7-3 Deleting the Data of the Built-in EtherNet/IP Function A-129
A-8 B7A Interface Unit A-131
A-8-1 Overview A-131
A-8-2 System Configuration A-131
A-8-3 Models A-131
A-8-4 B7A Communications Specifications A-132
A-8-5 Common Specifications A-133
A-8-6 I/O Memory Allocations A-133
A-8-7 Transmission Error Processing A-133
A-8-8 Parts and Names A-135
A-8-9 Preparing and Connecting Cables A-137
A-8-10 Connection Diagrams A-139
A-9 Installing the USB Driver A-142

A-1 Specifications of Basic I/O Units

A-1-1 Overview of Units

Basic I/O Units

● Basic Input Units

Type of Unit	Name	Specifications		Model	Page
Basic Input Units	DC Input Units	Terminal block, 12 to 24 VDC	8 inputs	CJ1W-ID201*1	A-5
		Terminal block, 24 VDC,	16 inputs	CJ1W-ID211	A-7
				CJ1W-ID212	A-8
		Fujitsu/OTAX connector, 24 VDC	32 inputs	CJ1W-ID231	A-9
		MIL connector, 24 VDC	32 inputs	CJ1W-ID232	A-11
				CJ1W-ID233	A-13
		Fujitsu/OTAX connector, 24 VDC	64 inputs	CJ1W-ID261	A-15
		MIL connector, 24 VDC	64 inputs	CJ1W-ID262	A-17
	AC Input Units	Terminal block, 200 to 240 VAC	8 inputs	CJ1W-IA201*1	A-19
		Terminal block, 100 to 120 VAC	16 inputs	CJ1W-IA111	A-20
	Interrupt Input Unit	Terminal block, 24 VDC	16 inputs	CJ1W-INT01	A-21
	Quick-response Input Unit	Terminal block, 24 VDC	16 inputs	CJ1W-IDP01	A-23

*1 Although 16 I/O bits (1 word) are allocated, only 8 of these can be used for external I/O.

● Basic Output Units

Type of Unit	Name		Specifications		Model	Page
Basic Output Units	Relay Output Units		Terminal block, 250 VAC/24 VDC, 2 A, 8 independent contacts	8 outputs	CJ1W-OC201*1	A-25
			Terminal block, 250 VAC/24 VDC, 2 A	16 outputs	CJ1W-OC211	A-26
	Triac Output Unit		Terminal block, 250 VAC/24 VDC, 0.6 A	8 outputs	CJ1W-OA201*1 CJ1W-OA201-1*1	A-27
	Transistor Output Units	Sinking outputs	Terminal block, 12 to 24 VDC, 2 A	8 outputs	CJ1W-OD201*1	A-28
			Terminal block, 12 to 24 VDC, 0.5 A	8 outputs	CJ1W-OD203*1	A-29
			Terminal block, 12 to 24 VDC, 0.5 A	16 outputs	CJ1W-OD211	A-30
			Terminal block, 24 VDC, 0.5 A	16 outputs	CJ1W-OD213	A-31
			Fujitsu/OTAX connector, 12 to 24 VDC, 0.5 A	32 outputs	CJ1W-OD231	A-32
			MIL connector, 12 to 24 VDC, 0.5 A	32 outputs	CJ1W-OD233	A-34
			MIL connector, 24 VDC, 0.5 A	32 outputs	CJ1W-OD234	A-36
			Fujitsu/OTAX connector, 12 to 24 VDC, 0.3 A	64 outputs	CJ1W-OD261	A-38
			MIL connector, 12 to 24 VDC, 0.3 A	64 outputs	CJ1W-OD263	A-40
		Sourcing outputs	Terminal block, 24 VDC, 2 A, load short-circuit protection, line disconnection detection	8 outputs	CJ1W-OD202*1	A-42
			Terminal block, 24 VDC, 0.5 A, load short-circuit protection	8 outputs	CJ1W-OD204*1	A-44
			Terminal block, 24 VDC, 0.5 A, load short-circuit protection	16 outputs	CJ1W-OD212	A-45
			MIL connector, 24 VDC, 0.5 A, load short-circuit protection	32 outputs	CJ1W-OD232	A-46
			MIL connector, 12 to 24 VDC, 0.3 A	64 outputs	CJ1W-OD262	A-48

*1 Although 16 I/O bits (1 word) are allocated, only 8 of these can be used for external I/O.

● Basic Mixed I/O Units

Type of Unit	Name		Specifications		Model	Page
Mixed I/O Units	24-VDC Inputs/Transistor Output Units	Sinking output	Fujitsu/OTAX connector Inputs: 24 VDC Outputs: 12 to 24 VDC, 0.5 A	16 inputs 16 outputs	CJ1W-MD231	A-50
			MIL connector Inputs: 24 VDC Outputs: 12 to 24 VDC, 0.5 A		CJ1W-MD233	A-52
			Fujitsu/OTAX connector Inputs: 24 VDC Outputs: 12 to 24 VDC, 0.3 A	32 inputs 32 outputs	CJ1W-MD261	A-54
			MIL connector Inputs: 24 VDC Outputs: 12 to 24 VDC, 0.3 A		CJ1W-MD263	A-56
		Sourcing output	MIL connector Input: 24 VDC Outputs: 24 VDC, 0.5 A, load short-circuit protection	16 inputs 16 outputs	CJ1W-MD232	A-58
	TTL I/O Units		Inputs: 5 VDC Outputs: 5 VDC, 35 mA	32 inputs 32 outputs	CJ1W-MD563	A-60
	Precautions on Contact Output Units					A-62
	Load short-circuit protection and line disconnection detection for CJ1W-OD202					A-121
	Load short-circuit protection for CJ1W-OD204/OD212/OD232/MD232					A-123

Note For details on the connectors included with the Unit, refer to the information provided under Accessories in the tables for *Basic I/O Units* in the following pages.

Reading Terminal Connection Diagrams

- I/O terminals in terminal connection diagrams are shown as viewed from the front panel of the Unit.
- Terminal numbers A0 to A9 and B0 to B9 are used in this manual, but they are not printed on all Units.
- A0 to A20 and B0 to B20 are printed on the Units.

Terminology

● External Power Supply

The "external power supply" refers to the power supply connected between the +V and COM terminals.

The "voltage" for the external power supplies refers to the operating load voltage ranges for the external power supplies.

The "current" for the external power supplies refers to the required current for the photocouplers and other components connected to the +V terminals in the drive circuits of the output transistors (OUT terminals) to operate.

The external power supply connected between the +V and COM terminals requires the current capacity calculated from the following equation:

Current capacity = (Maximum load current) + (Consumption current in the drive circuit)

A-1-2 Basic I/O Units

Basic Input Units with Terminal Blocks

● CJ1W-ID201 DC Input Unit (12 to 24-VDC, 8 Points)

Name	8-point DC Input Unit with Terminal Block
Model	CJ1W-ID201
Rated Input Voltage	12 to 24 VDC
Rated Input Voltage Range	10.2 to 26.4 VDC
Input Impedance	2.4 kΩ
Input Current	10 mA typical (at 24 VDC)
ON Voltage/ON Current	8.8 VDC min./3 mA min.
OFF Voltage/OFF Current	3 VDC max./1 mA max.
ON Response Time	8.0 ms (default) max. (Can be set to between 0 and 32 ms in the Input Response Time Settings under the PLC Setup)*1, *2
OFF Response Time	8.0 ms (default) max. (Can be set to between 0 and 32 ms in the Input Response Time Settings under the PLC Setup)*1, *2
Number of Circuits	8 independent circuits
Number of Simultaneously ON Points	100% simultaneously ON
Insulation Resistance	20 MΩ between external terminals and the GR terminal (100 VDC)
Dielectric Strength	1,000 VAC between the external terminals and the GR terminal for 1 minute at a leakage current of 10 mA max.
Internal Current Consumption	80 mA max.
Weight	110 g max.
Circuit Configuration	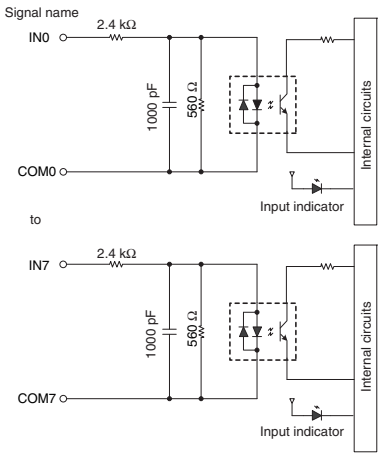

Terminal Connections	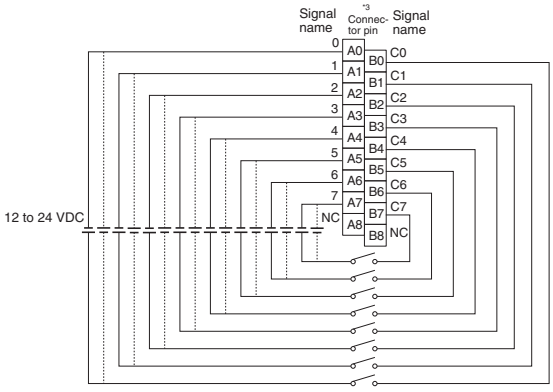 Polarity of the input power supply can be connected in either direction.

*1 The ON response time will be 20 µs maximum and OFF response time will be 400 µs maximum even if the response time are set to 0 ms due to internal element delays.

*2 The unit accepts input signals with longer signal widths than the Input Response Time Settings under the PLC Setup.

*3 Terminal numbers A0 to A8 and B0 to B8 are used in this manual, but they are not printed on the Unit.

Note Although 16 I/O bits (1 word) are allocated, only 8 of these can be used for external I/O.

● CJ1W-ID211 DC Input Unit (24 VDC, 16 Points)

Name	16-point DC Input Unit with Terminal Block
Model	CJ1W-ID211
Rated Input Voltage	24 VDC
Rated Input Voltage Range	20.4 to 26.4 VDC
Input Impedance	3.3 kΩ
Input Current	7 mA typical (at 24 VDC)
ON Voltage/ON Current	14.4 VDC min./3 mA min.
OFF Voltage/OFF Current	5 VDC max./1 mA max.
ON Response Time	8.0 ms (default) max. (Can be set to between 0 and 32 ms in the Input Response Time Settings under the PLC Setup)*1, *2
OFF Response Time	8.0 ms (default) max. (Can be set to between 0 and 32 ms in the Input Response Time Settings under the PLC Setup)*1, *2
Number of Circuits	16 (16 points/common, 1 circuit)
Number of Simultaneously ON Points	100% simultaneously ON (at 24 VDC) (Refer to the following illustration.)
Insulation Resistance	20 MΩ between external terminals and the GR terminal (100 VDC)
Dielectric Strength	1,000 VAC between the external terminals and the GR terminal for 1 minute at a leakage current of 10 mA max.
Internal Current Consumption	80 mA max.
Weight	110 g max.
Circuit Configuration	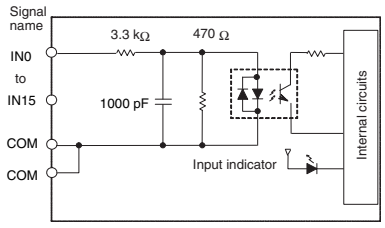 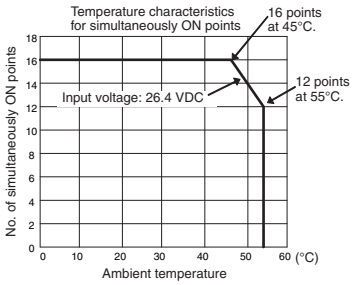
Terminal Connections	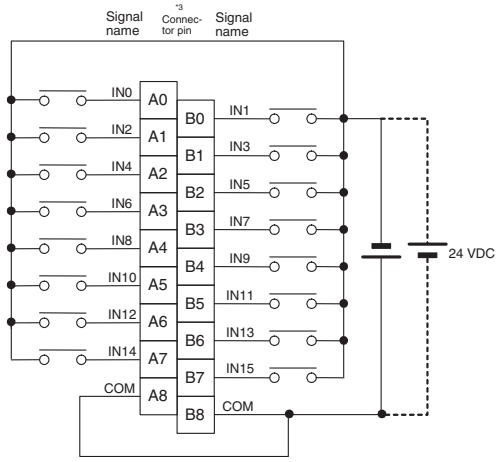 • Polarity of the input power supply can be connected in either direction.

*1 The ON response time will be 20 μs maximum and OFF response time will be 400 μs maximum even if the response time are set to 0 ms due to internal element delays.

*2 The unit accepts input signals with longer signal widths than the Input Response Time Settings under the PLC Setup.

*3 Terminal numbers A0 to A8 and B0 to B8 are used in this manual, but they are not printed on the Unit.

● CJ1W-ID212 DC Input Unit (24 VDC, 16 Points)

Name	16-point DC Input Unit with Terminal Block
Model	CJ1W-ID212
Rated Input Voltage	24 VDC
Rated Input Voltage Range	20.4 to 26.4 VDC
Input Impedance	3.3 kΩ
Input Current	7 mA typical (at 24 VDC)
ON Voltage/ON Current	14.4 VDC min./3 mA min.
OFF Voltage/OFF Current	5 VDC max./1 mA max.
ON Response Time	8.0 ms (default) max. (Can be set to between 0 and 32 ms in the Input Response Time Settings under the PLC Setup)*1, *2
OFF Response Time	8.0 ms (default) max. (Can be set to between 0 and 32 ms in the Input Response Time Settings under the PLC Setup)*1, *2
Number of Circuits	16 (16 points/common, 1 circuit)
Number of Simultaneously ON Points	100% simultaneously ON (at 24 VDC) (Refer to the following illustration.)
Insulation Resistance	20 MΩ between external terminals and the GR terminal (100 VDC)
Dielectric Strength	1,000 VAC between the external terminals and the GR terminal for 1 minute at a leakage current of 10 mA max.
Internal Current Consumption	130 mA max.
Weight	110 g max.
Circuit Configuration	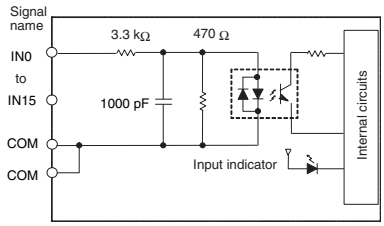 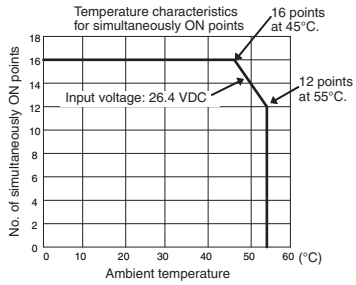
Terminal Connections	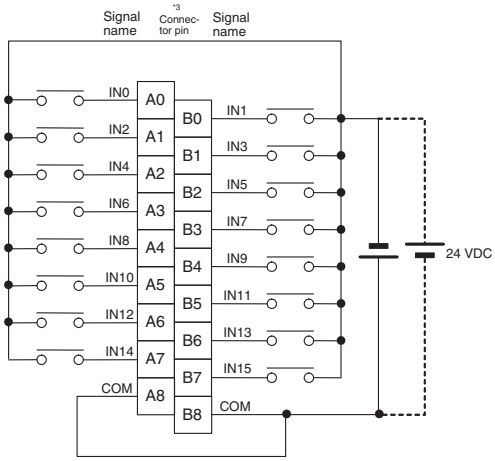 • Polarity of the input power supply can be connected in either direction.

*1 The ON response time will be 15 μs maximum and OFF response time will be 90 μs maximum even if the response time are set to 0 ms due to internal element delays.

*2 The unit accepts input signals with longer signal widths than the Input Response Time Settings under the PLC Setup.

*3 Terminal numbers A0 to A8 and B0 to B8 are used in this manual, but they are not printed on the Unit.

● CJ1W-ID231 DC Input Unit (24 VDC, 32 Points)

Name	32-point DC Input Unit with Fujitsu/OTAX Connector
Model	CJ1W-ID231
Rated Input Voltage	24 VDC
Rated Input Voltage Range	20.4 to 26.4 VDC
Input Impedance	5.6 kΩ
Input Current	4.1 mA typical (at 24 VDC)
ON Voltage/ON Current	19.0 VDC min./3 mA min.
OFF Voltage/OFF Current	5 VDC max./1 mA max.
ON Response Time	8.0 ms (default) max. (Can be set to between 0 and 32 ms in the Input Response Time Settings under the PLC Setup)*1, *2
OFF Response Time	8.0 ms (default) max. (Can be set to between 0 and 32 ms in the Input Response Time Settings under the PLC Setup)*1, *2
Number of Circuits	32 (16 points/common, 2 circuits)
Number of Simultaneously ON Points	75% (12 points/common) simultaneously ON (at 24 VDC) (Refer to the following illustration.)
Insulation Resistance	20 MΩ between external terminals and the GR terminal (100 VDC)
Dielectric Strength	1,000 VAC between the external terminals and the GR terminal for 1 minute at a leakage current of 10 mA max.
Internal Current Consumption	90 mA max.
Weight	70 g max.
Accessories	None
Circuit Configuration	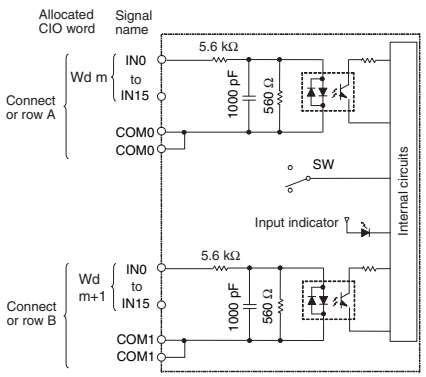 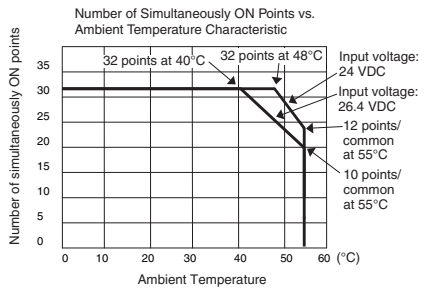

Terminal Connections	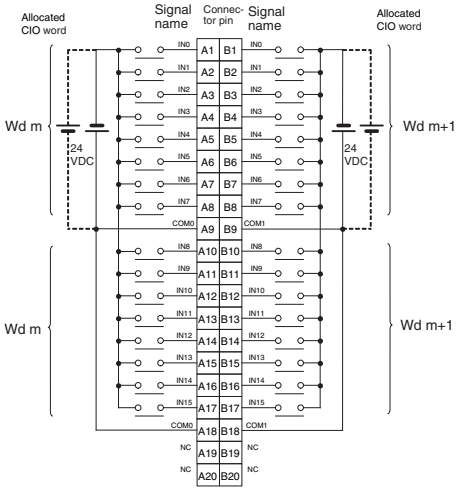 • The input power polarity can be connected in either direction. • Be sure to wire both pins A9 and A18 (COM0), and set the same polarity for both pins. • Be sure to wire both pins B9 and B18 (COM1), and set the same polarity for both pins.

*1 The ON response time will be 20 μs maximum and OFF response time will be 400 μs maximum even if the response times are set to 0 ms due to internal element delays.

*2 The unit accepts input signals with longer signal widths than the Input Response Time Settings under the PLC Setup.

Note Observe the following restrictions when connecting to a 2-wire sensor.

- Make sure the input power supply voltage is larger than the ON voltage (19 V) plus the residual voltage of the sensor (approx. 3 V).
- Use a sensor with a minimum load current of 3 mA min.
- Connect bleeder resistance if you connect a sensor with a minimum load current of 5 mA or higher.

● CJ1W-ID232 DC Input Unit (24 VDC, 32 Points)

Name	32-point DC Input Unit with MIL Connector
Model	CJ1W-ID232
Rated Input Voltage	24 VDC
Rated Input Voltage Range	20.4 to 26.4 VDC
Input Impedance	5.6 kΩ
Input Current	4.1 mA typical (at 24 VDC)
ON Voltage/ON Current	19.0 VDC min./3 mA min.
OFF Voltage/OFF Current	5 VDC max./1 mA max.
ON Response Time	8.0 ms (default) max. (Can be set to between 0 and 32 ms in the Input Response Time Settings under the PLC Setup)*1, *2
OFF Response Time	8.0 ms (default) max. (Can be set to between 0 and 32 ms in the Input Response Time Settings under the PLC Setup)*1, *2
Number of Circuits	32 (16 points/common, 2 circuits)
Number of Simultaneously ON Points	75% (12 points/common) simultaneously ON (at 24 VDC) (Refer to the following illustration.)
Insulation Resistance	20 MΩ between external terminals and the GR terminal (100 VDC)
Dielectric Strength	1,000 VAC between the external terminals and the GR terminal for 1 minute at a leakage current of 10 mA max.
Internal Current Consumption	90 mA max.
Weight	70 g max.
Accessories	None
Circuit Configuration	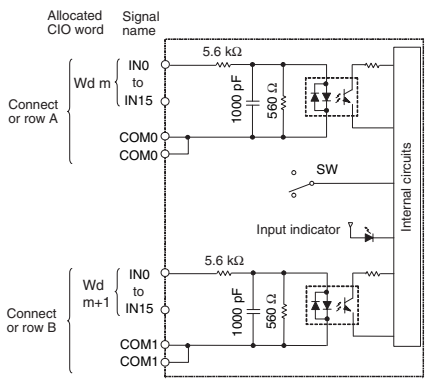 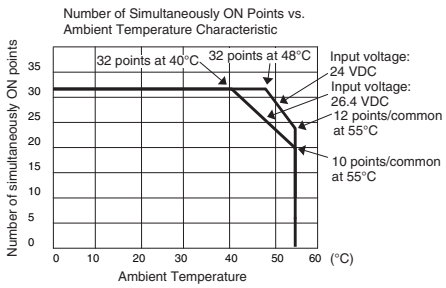

Terminal Connections	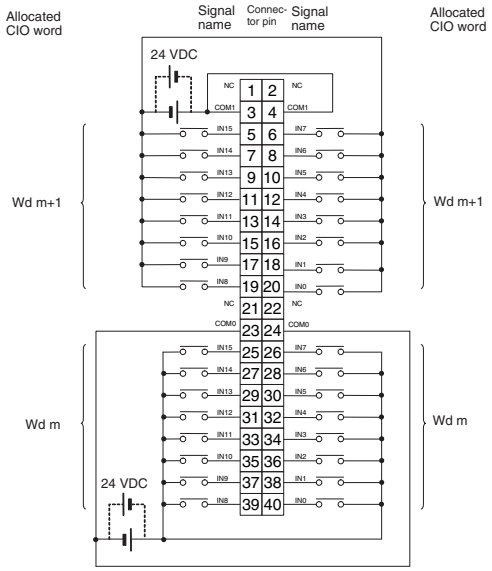 • The input power polarity can be connected in either direction. • Be sure to wire both pins 23 and 24 (COM0), and set the same polarity for both pins. • Be sure to wire both pins 3 and 4 (COM1), and set the same polarity for both pins.

*1 The ON response time will be 20 μs maximum and OFF response time will be 400 μs maximum even if the response times are set to 0 ms due to internal element delays.

*2 The unit accepts input signals with longer signal widths than the Input Response Time Settings under the PLC Setup.

Note Observe the following restrictions when connecting to a 2-wire sensor.

- Make sure the input power supply voltage is larger than the ON voltage (19 V) plus the residual voltage of the sensor (approx. 3 V).
- Use a sensor with a minimum load current of 3 mA min.
- Connect bleeder resistance if you connect a sensor with a minimum load current of 5 mA or higher.

● CJ1W-ID233 DC Input Unit (24 VDC, 32 Points)

Name	32-point DC Input Unit with MIL Connector
Model	CJ1W-ID233
Rated Input Voltage	24 VDC
Rated Input Voltage Range	20.4 to 26.4 VDC
Input Impedance	5.6 kΩ
Input Current	4.1 mA typical (at 24 VDC)
ON Voltage/ON Current	19.0 VDC min./3 mA min.
OFF Voltage/OFF Current	5 VDC max./1 mA max.
ON Response Time	8.0 ms (default) max. (Can be set to between 0 and 32 ms in the Input Response Time Settings under the PLC Setup)*1, *2
OFF Response Time	8.0 ms (default) max. (Can be set to between 0 and 32 ms in the Input Response Time Settings under the PLC Setup)*1, *2
Number of Circuits	32 (16 points/common, 2 circuits)
Number of Simultaneously ON Points	75% (12 points/common) simultaneously ON (at 24 VDC) (Refer to the following illustration.)
Insulation Resistance	20 MΩ between external terminals and the GR terminal (100 VDC)
Dielectric Strength	1,000 VAC between the external terminals and the GR terminal for 1 minute at a leakage current of 10 mA max.
Internal Current Consumption	200 mA max.
Weight	70 g max.
Accessories	None
Circuit Configuration	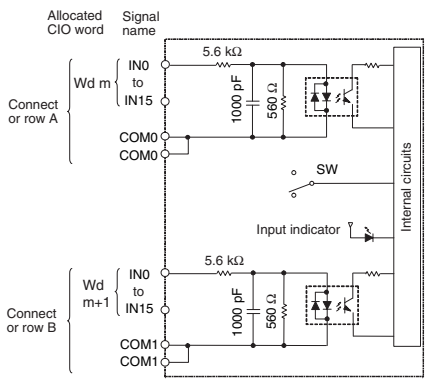 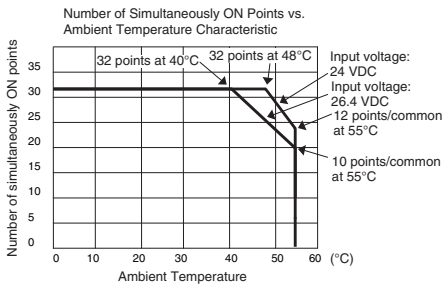

Terminal Connections	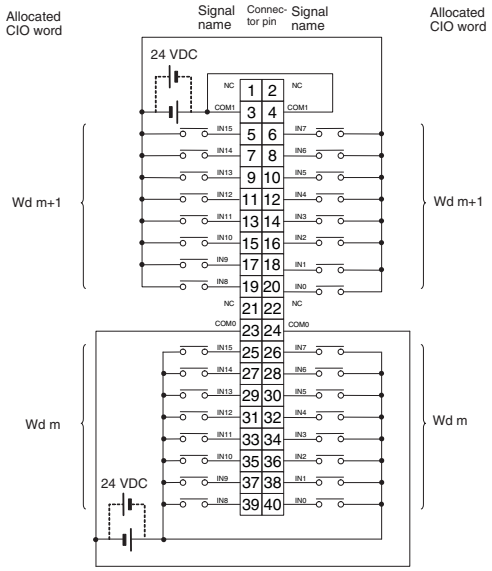 • The input power polarity can be connected in either direction. • Be sure to wire both pins 23 and 24 (COM0), and set the same polarity for both pins. • Be sure to wire both pins 3 and 4 (COM1), and set the same polarity for both pins.

*1 The ON response time will be 15 μs maximum and OFF response time will be 90 μs maximum even if the response times are set to 0 ms due to internal element delays.

*2 The unit accepts input signals with longer signal widths than the Input Response Time Settings under the PLC Setup.

Note Observe the following restrictions when connecting to a 2-wire sensor.

- Make sure the input power supply voltage is larger than the ON voltage (19 V) plus the residual voltage of the sensor (approx. 3 V).
- Use a sensor with a minimum load current of 3 mA min.
- Connect bleeder resistance if you connect a sensor with a minimum load current of 5 mA or higher.

● CJ1W-ID261 DC Input Unit (24 VDC, 64 Points)

Name	64-point DC Input Unit with Fujitsu/OTAX Connector
Model	CJ1W-ID261
Rated Input Voltage	24 VDC
Rated Input Voltage Range	20.4 to 26.4 VDC
Input Impedance	5.6 kΩ
Input Current	4.1 mA typical (at 24 VDC)
ON Voltage/ON Current	19.0 VDC min./3 mA min.
OFF Voltage/OFF Current	5 VDC max./1 mA max.
ON Response Time	8.0 ms (default) max. (Can be set to between 0 and 32 ms in the Input Response Time Settings under the PLC Setup)*1, *2
OFF Response Time	8.0 ms (default) max. (Can be set to between 0 and 32 ms in the Input Response Time Settings under the PLC Setup)*1, *2
Number of Circuits	64 (16 points/common, 4 circuits)
Number of Simultaneously ON Points	50% (16 points/common) simultaneously ON (at 24 VDC) (Refer to the following illustrations.)
Insulation Resistance	20 MΩ between external terminals and the GR terminal (100 VDC)
Dielectric Strength	1,000 VAC between the external terminals and the GR terminal for 1 minute at a leakage current of 10 mA max.
Internal Current Consumption	90 mA max.
Weight	110 g max.
Accessories	None
Circuit Configuration	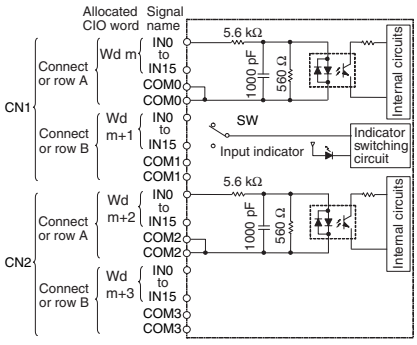 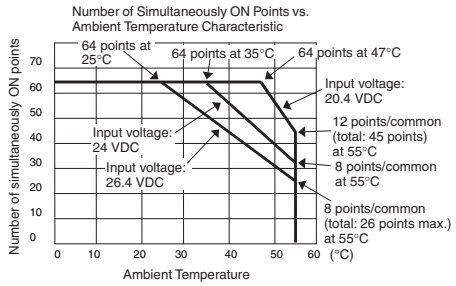

	CN1	CN2
Terminal Connections	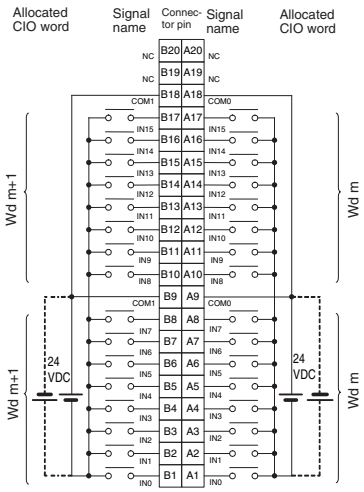 • The input power polarity can be connected in either direction. • Be sure to wire both pins A9 and A18 (COM0) of CN1, and set the same polarity for both pins. • Be sure to wire both pins B9 and B18 (COM1) of CN1, and set the same polarity for both pins.	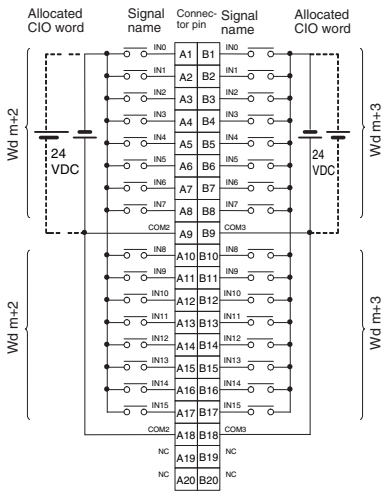 • The input power polarity can be connected in either direction. • Be sure to wire both pins A9 and A18 (COM2) of CN2, and set the same polarity for both pins. • Be sure to wire both pins B9 and B18 (COM3) of CN2, and set the same polarity for both pins.

*1 The ON response time will be 120 µs maximum and OFF response time will be 400 µs maximum even if the response times are set to 0 ms due to internal element delays.

*2 The unit accepts input signals with longer signal widths than the Input Response Time Settings under the PLC Setup.

Note Observe the following restrictions when connecting to a 2-wire sensor.

- Make sure the input power supply voltage is larger than the ON voltage (19 V) plus the residual voltage of the sensor (approx. 3 V).
- Use a sensor with a minimum load current of 3 mA min.
- Connect bleeder resistance if you connect a sensor with a minimum load current of 5 mA or higher.

● CJ1W-ID262 DC Input Unit (24 VDC, 64 Points)

Name	64-point DC Input Unit with MIL Connector
Model	CJ1W-ID262
Rated Input Voltage	24 VDC
Rated Input Voltage Range	20.4 to 26.4 VDC
Input Impedance	5.6 kΩ
Input Current	4.1 mA typical (at 24 VDC)
ON Voltage/ON Current	19.0 VDC min./3 mA min.
OFF Voltage/OFF Current	5 VDC max./1 mA max.
ON Response Time	8.0 ms (default) max. (Can be set to between 0 and 32 ms in the Input Response Time Settings under the PLC Setup)*1, *2
OFF Response Time	8.0 ms (default) max. (Can be set to between 0 and 32 ms in the Input Response Time Settings under the PLC Setup)*1, *2
Number of Circuits	64 (16 points/common, 4 circuits)
Number of Simultaneously ON Points	50% (8 points/common) simultaneously ON (at 24 VDC) (Refer to the following illustrations.)
Insulation Resistance	20 MΩ between external terminals and the GR terminal (100 VDC)
Dielectric Strength	1,000 VAC between the external terminals and the GR terminal for 1 minute at a leakage current of 10 mA max.
Internal Current Consumption	90 mA max.
Weight	110 g max.
Accessories	None
Circuit Configuration	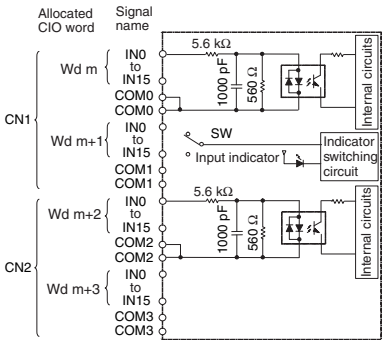 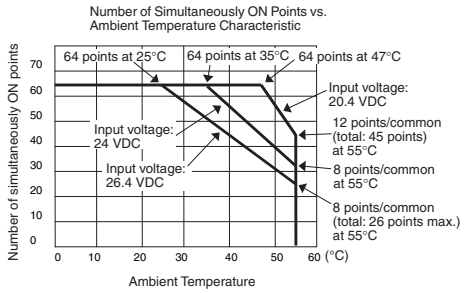

	CN1	CN2
Terminal Connections	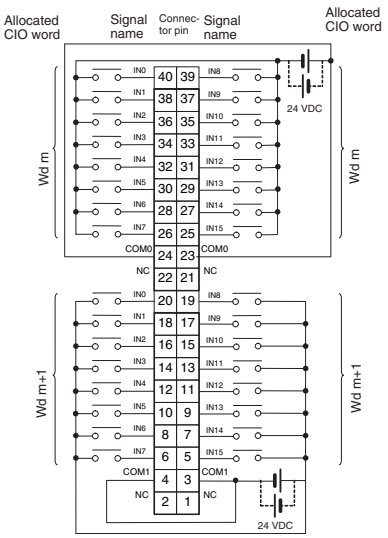 • The input power polarity can be connected in either direction. • Be sure to wire both pins 23 and 24 (COM0) of CN1, and set the same polarity for both pins. • Be sure to wire both pins 3 and 4 (COM1) of CN1, and set the same polarity for both pins.	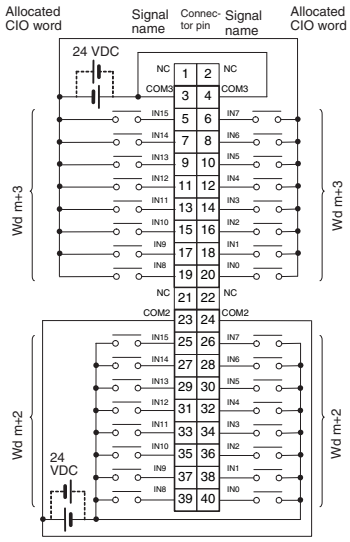 • The input power polarity can be connected in either direction. • Be sure to wire both pins 23 and 24 (COM2) of CN2, and set the same polarity for both pins. • Be sure to wire both pins 3 and 4 (COM3) of CN2, and set the same polarity for both pins.

*1 The ON response time will be 120 μs maximum and OFF response time will be 400 μs maximum even if the response times are set to 0 ms due to internal element delays.

*2 The unit accepts input signals with longer signal widths than the Input Response Time Settings under the PLC Setup.

Note Observe the following restrictions when connecting to a 2-wire sensor.

- Make sure the input power supply voltage is larger than the ON voltage (19 V) plus the residual voltage of the sensor (approx. 3 V).
- Use a sensor with a minimum load current of 3 mA min.
- Connect bleeder resistance if you connect a sensor with a minimum load current of 5 mA or higher.

● CJ1W-IA201 AC Input Unit (200 VAC, 8 Points)

Name	8-point AC Input Unit with Terminal Block
Model	CJ1W-IA201
Rated Input Voltage	200 to 240 VAC 50/60 Hz
Rated Input Voltage Range	170 to 264 VAC
Input Impedance	21 kΩ (50 Hz), 18 kΩ (60 Hz)
Input Current	9 mA typical (at 200 VAC, 50 Hz), 11 mA typical (at 200 VAC, 60 Hz)
ON Voltage/ON Current	120 VAC min./4 mA min.
OFF Voltage/OFF Current	40 VAC max./2 mA max.
ON Response Time	18.0 ms max. (PLC Setup default setting: 8 ms)*1
OFF Response Time	48.0 ms max. (PLC Setup default setting: 8 ms)*1
Number of Circuits	8 (8 points/common, 1 circuit)
Number of Simultaneously ON Points	100% (8 points/common) simultaneously ON
Insulation Resistance	20 MΩ between external terminals and the GR terminal (500 VDC)
Dielectric Strength	2,000 VAC between the external terminals and the GR terminal for 1 minute at a leakage current of 10 mA max.
Internal Current Consumption	80 mA max.
Weight	130 g max.
Accessories	None
Circuit Configuration	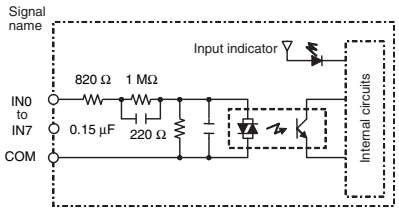
Terminal Connections	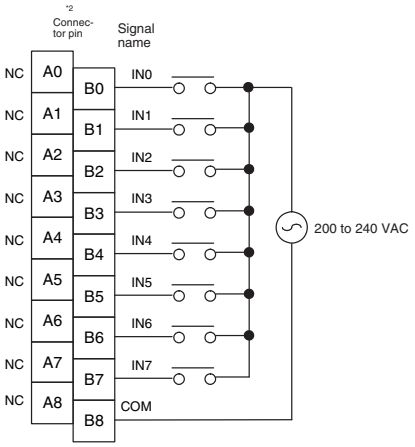

*1 The Input ON and OFF response times for Basic I/O Units can be set to 0 ms, 0.5 ms, 1 ms, 2 ms, 4 ms, 8 ms, 16 ms, or 32 ms in the PLC Setup. When the response times have been set to 0 ms, the ON response time will be 10 ms maximum and the OFF response time will be 40 ms maximum due to internal element delays.

*2 Terminal numbers A0 to A8 and B0 to B8 are used in this manual, but they are not printed on the Unit.

Note Although 16 I/O bits (1 word) are allocated, only 8 of these can be used for external I/O.

● CJ1W-IA111 AC Input Unit (100 VAC, 16 points)

Name	16-point AC Input Unit with Terminal Block
Model	CJ1W-IA111
Rated input voltage	100 to 120 VAC 50/60 Hz*2
Rated Input Voltage Range	85 to 132 VAC
Input Impedance	14.5 kΩ (50 Hz), 12 kΩ (60 Hz)
Input Current	7 mA typical (at 100 VAC, 50 Hz), 8 mA typical (at 100 VAC, 60 Hz)
ON Voltage/ON Current	70 VAC min./4 mA min
OFF Voltage/OFF Current	20 VAC max./2 mA max
ON Response Time	18 ms max. (PLC Setup default setting: 8 ms)*1
OFF Response Time	48 ms max. (PLC Setup default setting: 8 ms)*1
Number of Circuits	16 (16 points/common, 1 circuit)
Number of Inputs ON Simultaneously	100% simultaneously ON (16 points/common)
Insulation Resistance	20 MΩ between external terminals and the GR terminal (500 VDC)
Dielectric Strength	2,000 VAC between the external terminals and the GR terminal for 1 minute at a leakage current of 10 mA max.
Internal Current Consumption	90 mA max.
Weight	130 g max.
Accessories	None
Circuit Layout	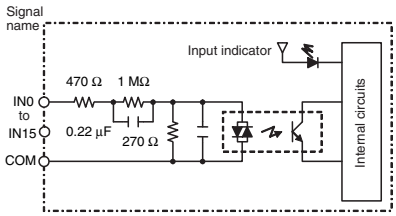
Terminal Connections	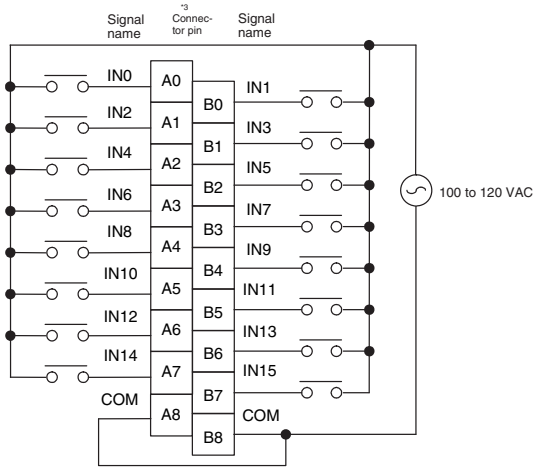

*1 The Input ON and OFF response times for Basic I/O Units can be set to 0 ms, 0.5 ms, 1 ms, 2 ms, 4 ms, 8 ms, 16 ms, or 32 ms in the PLC Setup. When the response times have been set to 0 ms, the ON response time will be 10 ms maximum and the OFF response time will be 40 ms maximum due to internal element delays.

*2 Use an input voltage of 90 VAC or higher when connecting 2-wire sensors.

*3 Terminal numbers A0 to A8 and B0 to B8 are used in this manual, but they are not printed on the Unit.

● CJ1W-INT01 Interrupt Input Unit (16 Points)

Name	16-point Interrupt Input Unit with Terminal Block
Model	CJ1W-INT01
Rated Input Voltage	24 VDC
Rated Input Voltage Range	20.4 to 26.4 VDC
Input Impedance	3.3 kΩ
Input Current	7 mA typical (at 24 VDC)
ON Voltage/ON Current	14.4 VDC min./3 mA min.
OFF Voltage/OFF Current	5 VDC max./1 mA max.
ON Response Time	0.05 ms max.
OFF Response Time	0.5 ms max.
Number of Circuits	16 (16 points/common, 1 circuit)
Number of Simultaneously ON Points	100% (16 points/common) simultaneously ON (24 VDC)
Insulation Resistance	20 MΩ between external terminals and GR terminal (at 100 VDC)
Dielectric Strength	1,000 VAC between external terminals and GR terminal for 1 minute at a leakage current of 10 mA max.
Internal Current Consumption	80 mA max.
Weight	110 g max.
Accessories	None
Circuit Configuration	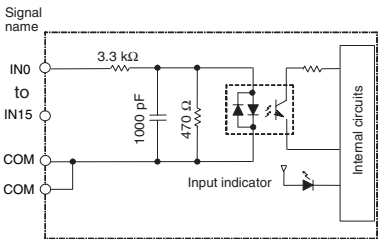 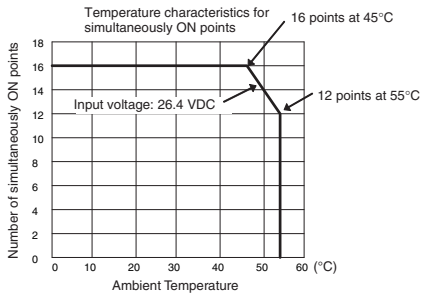 • Up to two Interrupt Input Units can be mounted to the CPU Rack, but they must be connected as one the five Unit*1 immediately next to the CPU Unit. If an Interrupt Input Unit is connected in any other position, an I/O setting error will occur. • Set the pulse width of signals input to the Interrupt Input Unit so they satisfy the following conditions. 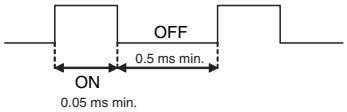

Terminal Connections	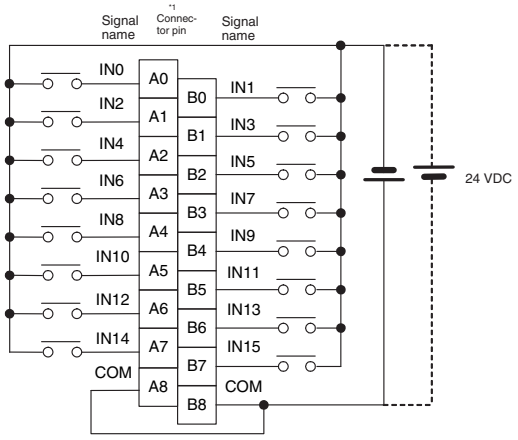 • The polarity can be connected in either direction.

*1 Terminal numbers A0 to A8 and B0 to B8 are used in this manual, but they are not printed on the Unit.

● CJ1W-IDP01 Quick-response Input Unit (16 Points)

Name	16-point Quick-response Input Unit with Terminal Block
Model	CJ1W-IDP01
Rated Input Voltage	24 VDC
Rated Input Voltage Range	20.4 to 26.4 VDC
Input Impedance	3.3 kΩ
Input Current	7 mA typical (at 24 VDC)
ON Voltage/ON Current	14.4 VDC min./3 mA min.
OFF Voltage/OFF Current	5 VDC max./1 mA max.
ON Response Time	0.05 ms max.
OFF Response Time	0.5 ms max.
Number of Circuits	16 (16 points/common, 1 circuit)
Number of Simultaneously ON Points	100% (16 points/common) simultaneously ON (24 VDC)
Insulation Resistance	20 MΩ between external terminals and GR terminal (at 100 VDC)
Dielectric Strength	1,000 VAC between external terminals and GR terminal for 1 minute at a leakage current of 10 mA max.
Internal Current Consumption	80 mA max.
Weight	110 g max.
Accessories	None
Circuit Configuration	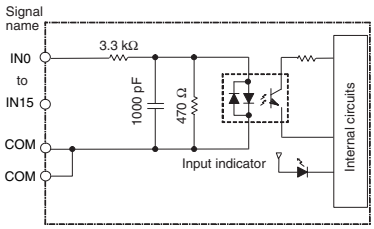 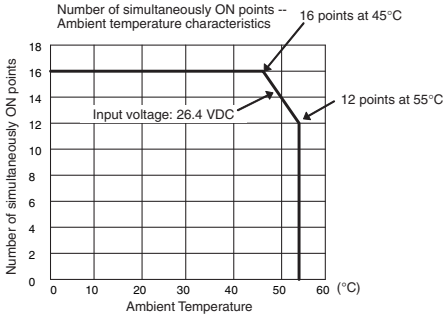
Terminal Connections	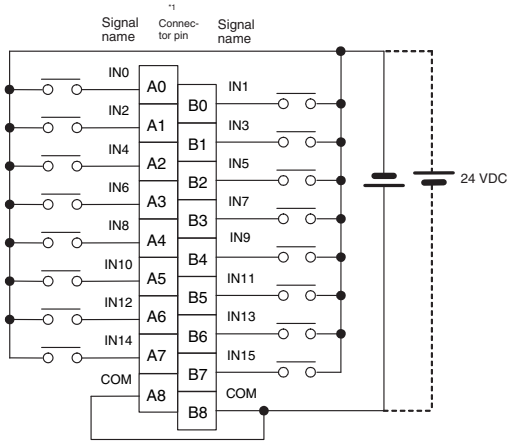 • The input power supply polarity can be connected in either direction.

- With quick-response inputs, pulse inputs shorter than the CPU Unit's cycle time can be read by the CPU Unit.
- The pulse width (ON time) that can be read by the Quick-response Input Unit is 0.05 ms.
- Inputs read by the internal circuits are cleared when inputs are refreshed.

*1 Terminal numbers A0 to A8 and B0 to B8 are used in this manual, but they are not printed on the Unit.

Basic Output Units

● CJ1W-OC201 Contact Output Unit (Independent Relays, 8 Points)

Name	8-point Contact Output Unit with Terminal Block (Independent Relays)
Model	CJ1W-OC201
Max. Switching Capacity	2 A 250 VAC (cosϕ = 1), 2 A 250 VAC (cosϕ = 0.4), 2 A 24 VDC (16 A/Unit)
Min. Switching Capacity	1 mA 5 VDC
Relays	NY-24W-K-IE (FCL Components, Ltd.), Cannot be replaced.
Service Life of Relay	Electrical: 150,000 operations (24 VDC, resistive load)/100,000 operations (240 VAC, cosϕ = 0.4, inductive load) Mechanical: 20,000,000 operations Service life will vary depending on the connected load. Refer to page A-62 for information on service life according to the load.
ON Response Time	15 ms max.
OFF Response Time	15 ms max.
Number of Circuits	8 independent contacts
Insulation Resistance	20 MΩ between external terminals and the GR terminal (500 VDC)
Dielectric Strength	2,000 VAC between the external terminals and the GR terminal for 1 minute at a leakage current of 10 mA max.
Internal Current Consumption	90 mA 5 VDC max. 48 mA 24 VDC max. (6 mA × No. of ON points)
Weight	140 g max.
Circuit Configuration	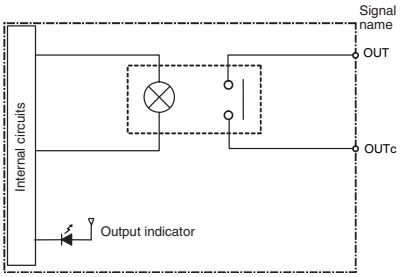
Terminal Connections	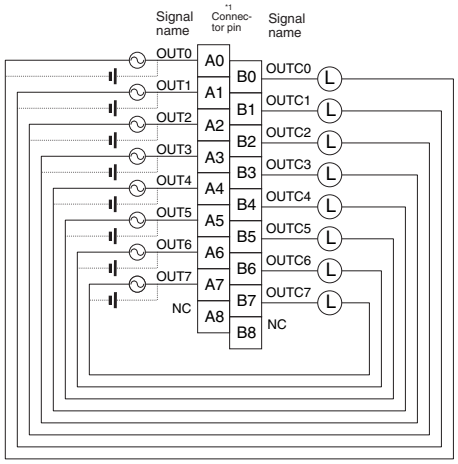 • The input power supply polarity can be connected in either direction.

*1 Terminal numbers A0 to A8 and B0 to B8 are used in this manual, but they are not printed on the Unit.

Note Although 16 I/O bits (1 word) are allocated, only 8 of these can be used for external I/O.

● CJ1W-OC211 Contact Output Unit (16 Points)

Name	16-point Contact Output Unit with Terminal Block
Model	CJ1W-OC211
Max. Switching Capacity	2 A 250 VAC (cosϕ = 1), 2 A 250 VAC (cosϕ = 0.4), 2 A 24 VDC (8 A/Unit)
Min. Switching Capacity	1 mA 5 VDC
Relays	NY-24W-K-IE (FCL Components, Ltd.), Cannot be replaced.
Service Life of Relay	Electrical: 150,000 operations (24 VDC, resistive load)/ 100,000 operations (240 VAC, cosϕ = 0.4, inductive load) Mechanical: 20,000,000 operations Service life will vary depending on the connected load. Refer to page A-62 for information on service life according to the load.
ON Response Time	15 ms max.
OFF Response Time	15 ms max.
Number of Circuits	16 points/common, 1 circuit
Insulation Resistance	20 MΩ between external terminals and the GR terminal (500 VDC)
Dielectric Strength	2,000 VAC between the external terminals and the GR terminal for 1 minute at a leakage current of 10 mA max.
Internal Current Consumption	110 mA 5 VDC max. 96 mA 24 VDC max. (6 mA × No. of ON points)
Weight	170 g max.
Circuit Configuration	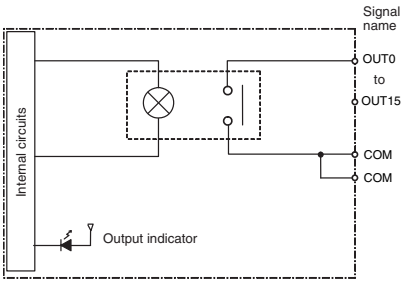
Terminal Connections	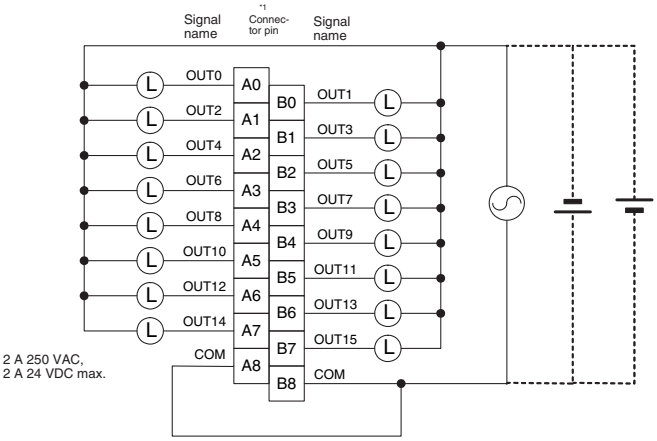

*1 Terminal numbers A0 to A8 and B0 to B8 are used in this manual, but they are not printed on the Unit.

● CJ1W-OA201/OA201-1 Triac Output Unit (8 Points)

Name	8-point Triac Output Unit with Terminal Block
Model	CJ1W-OA201/OA201-1
Max. Switching Capacity	0.6 A 250 VAC, 50/60 Hz (2.4 A/Unit)
Max. Inrush Current	15 A (pulse width: 10 ms max.)
Min. Switching Capacity	50 mA 75 VAC
Leakage Current	1.5 mA (200 VAC) max.
Residual Voltage	1.6 VAC max.
ON Response Time	1 ms max.
OFF Response Time	1/2 of load frequency + 1 ms or less.
Number of Circuits	8 (8 points/common, 1 circuit)
Surge Protector	C.R Absorber + Surge Absorber
Fuses	5 A (1/common, 1 used) The fuse cannot be replaced by the user.
Insulation Resistance	20 MΩ between the external terminals and the GR terminal (500 VDC)
Dielectric Strength	2,000 VAC between the external terminals and the GR terminal for 1 minute at a leakage current of 10 mA max.
Internal Current Consumption	220 mA max.
Weight	150 g max.
Circuit Configuration	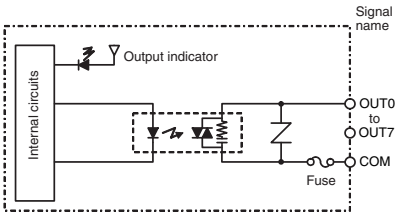
Terminal Connections	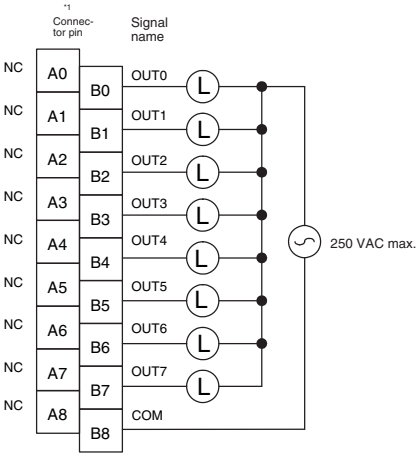

*1 Terminal numbers A0 to A8 and B0 to B8 are used in this manual, but they are not printed on the Unit.

Note 1 Although 16 I/O bits (1 word) are allocated, only 8 of these can be used for external I/O.

2 The CJ1W-OA201 is a UL-uncertified product. (Models without the UL mark after March 2025)

3 The CJ1W-OA201-1 is a UL-certified product.
The UL rating is as described below.

- 0.5 A 240 VAC (2 A/Unit) (GEN.) (LRA.)
- 0.15 A 240 VAC (0.6 A/Unit) (FLA.)

● CJ1W-OD201 Transistor Output Unit (8 Points)

Name	8-point Transistor Output Unit with Terminal Block (Sinking Outputs)
Model	CJ1W-OD201
Rated Voltage	12 to 24 VDC
Operating Load Voltage Range	10.2 to 26.4 VDC
Maximum Load Current	2.0 A/point, 8.0 A/Unit
Maximum Inrush Current	10 A/point, 10 ms max.
Leakage Current	0.1 mA max.
Residual Voltage	1.5 V max.
ON Response Time	0.5 ms max.
OFF Response Time	1.0 ms max.
Insulation Resistance	20 MΩ between the external terminals and the GR terminal (100 VDC)
Dielectric Strength	1,000 VAC between the external terminals and the GR terminal for 1 minute at a leakage current of 10 mA max.
Number of Circuits	8 (4 points/common, 2 circuits)
Internal Current Consumption	90 mA max.
Fuse	6.3 A (1/common, 2 used) The fuse cannot be replaced by the user.
External Power Supply	12 to 24 VDC, 10 mA min.
Weight	110 g max.
Circuit Configuration	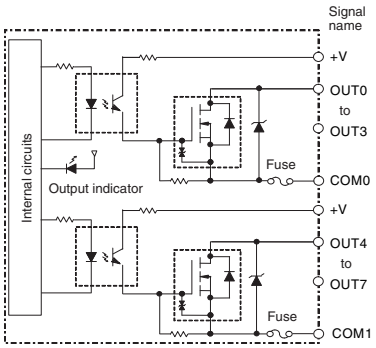
Terminal Connections	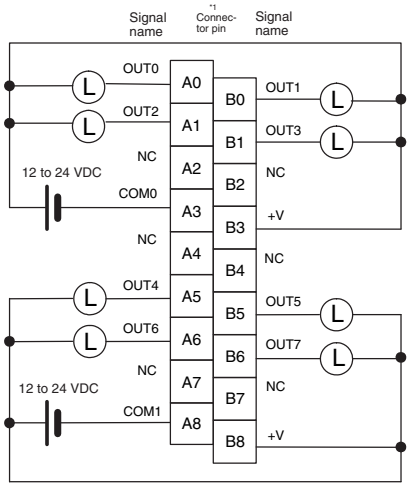 • When wiring, pay careful attention to the polarity of the external power supply. The load may operate incorrectly if the polarity is reversed.

*1 Terminal numbers A0 to A8 and B0 to B8 are used in this manual, but they are not printed on the Unit.

Note Although 16 I/O bits (1 word) are allocated, only 8 of these can be used for external I/O.

● CJ1W-OD203 Transistor Output Unit (8 Points)

Name	8-point Transistor Output Unit with Terminal Block (Sinking Outputs)
Model	CJ1W-OD203
Rated Voltage	12 to 24 VDC
Operating Load Voltage Range	10.2 to 26.4 VDC
Maximum Load Current	0.5 A/point, 4.0 A/Unit
Maximum Inrush Current	4.0 A/point, 10 ms max.
Leakage Current	0.1 mA max.
Residual Voltage	1.5 V max.
ON Response Time	0.1 ms max.
OFF Response Time	0.8 ms max.
Insulation Resistance	20 MΩ between the external terminals and the GR terminal (100 VDC)
Dielectric Strength	1,000 VAC between the external terminals and the GR terminal for 1 minute at a leakage current of 10 mA max.
Number of Circuits	8 (8 points/common, 1 circuit)
Internal Current Consumption	100 mA max.
Fuse	None
External Power Supply	10.2 to 26.4 VDC, 20 mA min.
Weight	110 g max.
Circuit Configuration	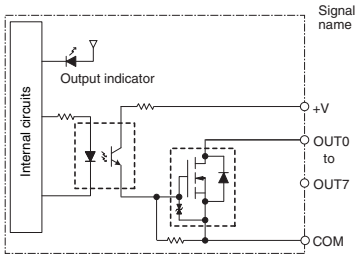
Terminal Connections	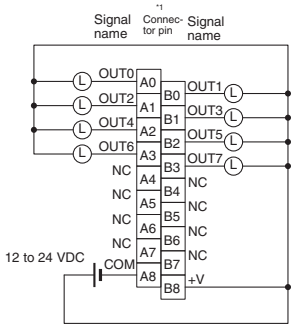 • When wiring, pay careful attention to the polarity of the external power supply. The load may operate incorrectly if the polarity is reversed.

*1 Terminal numbers A0 to A8 and B0 to B8 are used in this manual, but they are not printed on the Unit.

Note Although 16 I/O bits (1 word) are allocated, only 8 of these can be used for external I/O.

● CJ1W-OD211 Transistor Output Unit (16 Points)

Name	16-point Transistor Output Unit with Terminal Block (Sinking Outputs)
Model	CJ1W-OD211
Rated Voltage	12 to 24 VDC
Operating Load Voltage Range	10.2 to 26.4 VDC
Maximum Load Current	0.5 A/point, 5.0 A/Unit
Maximum Inrush Current	4.0 A/point, 10 ms max.
Leakage Current	0.1 mA max.
Residual Voltage	1.5 V max.
ON Response Time	0.1 ms max.
OFF Response Time	0.8 ms max.
Insulation Resistance	20 MΩ between the external terminals and the GR terminal (100 VDC)
Dielectric Strength	1,000 VAC between the external terminals and the GR terminal for 1 minute at a leakage current of 10 mA max.
Number of Circuits	16 (16 points/common, 1 circuit)
Internal Current Consumption	5 VDC 100 mA max.
Fuse	None
External Power Supply	10.2 to 26.4 VDC, 20 mA min.
Weight	110 g max.
Circuit Configuration	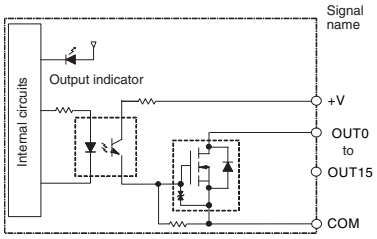
Terminal Connections	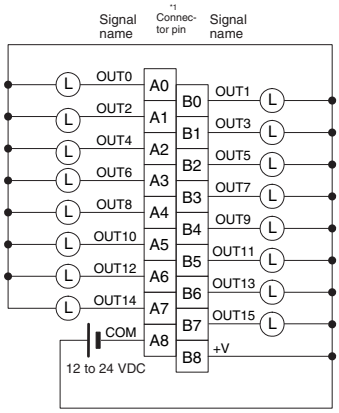 • When wiring, pay careful attention to the polarity of the external power supply. The load may operate incorrectly if the polarity is reversed.

*1 Terminal numbers A0 to A8 and B0 to B8 are used in this manual, but they are not printed on the Unit.

● CJ1W-OD213 Transistor Output Unit (16 Points)

Name	16-point Transistor Output Unit with Terminal Block (Sinking Outputs)
Model	CJ1W-OD213
Rated Voltage	24 VDC
Operating Load Voltage Range	20.4 to 26.4 VDC
Maximum Load Current	0.5 A/point, 5.0 A/Unit
Maximum Inrush Current	4.0 A/point, 10 ms max.
Leakage Current	0.1 mA max.
Residual Voltage	1.5 V max.
ON Response Time	15 µs max.
OFF Response Time	80 µs max.
Insulation Resistance	20 MΩ between the external terminals and the GR terminal (100 VDC)
Dielectric Strength	1,000 VAC between the external terminals and the GR terminal for 1 minute at a leakage current of 10 mA max.
Number of Circuits	16 (16 points/common, 1 circuit)
Internal Current Consumption	5 VDC 150 mA max.
Fuse	None
External Power Supply	20.4 to 26.4 VDC, 55 mA min.
Weight	110 g max.
Circuit Configuration	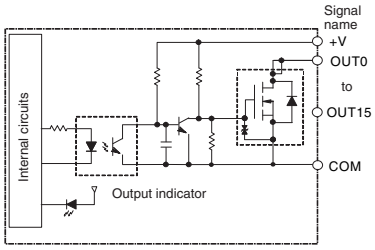
Terminal Connections	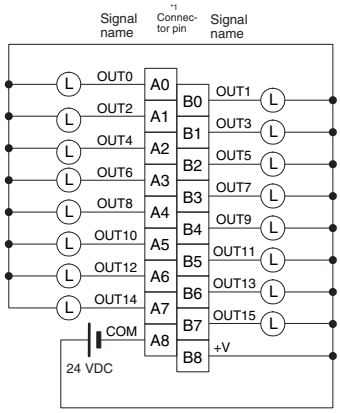 • When wiring, pay careful attention to the polarity of the external power supply. The load may operate incorrectly if the polarity is reversed.

*1 Terminal numbers A0 to A8 and B0 to B8 are used in this manual, but they are not printed on the Unit.

● CJ1W-OD231 Transistor Output Unit (32 Points)

Name	32-point Transistor Output Unit with Fujitsu/OTAX Connector (Sinking Outputs)
Model	CJ1W-OD231
Rated Voltage	12 to 24 VDC
Operating Load Voltage Range	10.2 to 26.4 VDC
Maximum Load Current	0.5 A/point, 2.0 A/common, 4.0 A/Unit
Maximum Inrush Current	4.0 A/point, 10 ms max.
Leakage Current	0.1 mA max.
Residual Voltage	1.5 V max.
ON Response Time	0.1 ms max.
OFF Response Time	0.8 ms max.
Insulation Resistance	20 MΩ between the external terminals and the GR terminal (100 VDC)
Dielectric Strength	1,000 VAC between the external terminals and the GR terminal for 1 minute at a leakage current of 10 mA max.
Number of Circuits	32 (16 points/common, 2 circuits)
Internal Current Consumption	5 VDC 140 mA max.
Fuse	None
External Power Supply	10.2 to 26.4 VDC, 30 mA min.
Weight	70 g max.
Accessories	None
Circuit Configuration	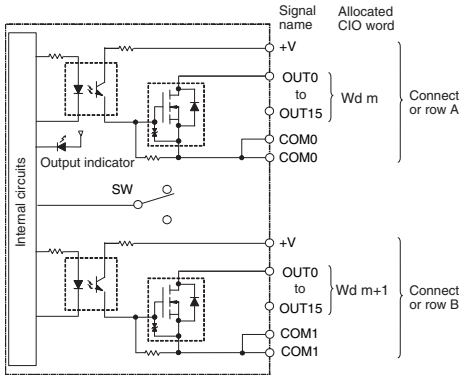

Terminal Connections

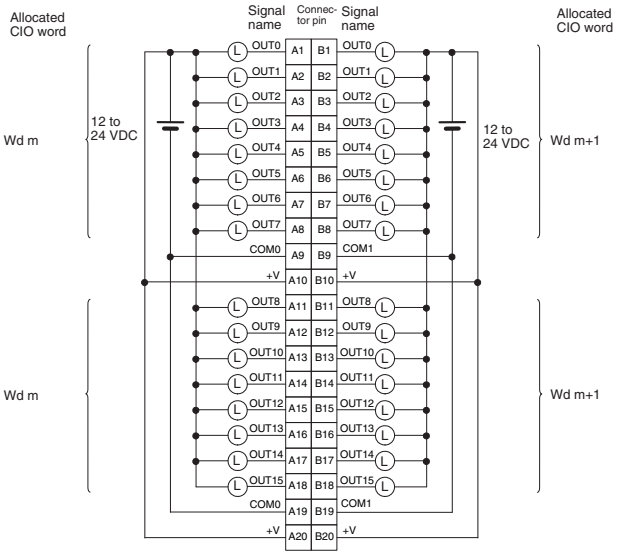

- When wiring, pay careful attention to the polarity of the external power supply. The load may operate incorrectly if the polarity is reversed.
- Be sure to wire both terminals A9 and A19 (COM0).
- Be sure to wire both terminals B9 and B19 (COM1).
- Be sure to wire both terminals A10 and A20 (+V).
- Be sure to wire both terminals B10 and B20 (+V).

● CJ1W-OD233 Transistor Output Unit (32 Points)

Name	32-point Transistor Output Unit with MIL Connector (Sinking Outputs)
Model	CJ1W-OD233
Rated Voltage	12 to 24 VDC
Operating Load Voltage Range	10.2 to 26.4 VDC
Maximum Load Current	0.5 A/point, 2 A/common, 4 A/Unit
Maximum Inrush Current	4.0 A/point, 10 ms max.
Leakage Current	0.1 mA max.
Residual Voltage	1.5 V max.
ON Response Time	0.1 ms max.
OFF Response Time	0.8 ms max.
Insulation Resistance	20 MΩ between the external terminals and the GR terminal (100 VDC)
Dielectric Strength	1,000 VAC between the external terminals and the GR terminal for 1 minute at a leakage current of 10 mA max.
Number of Circuits	32 (16 points/common, 2 circuits)
Internal Current Consumption	140 mA max.
Fuse	None
External Power Supply	12 to 24 VDC, 30 mA min.
Weight	70 g max.
Circuit Configuration	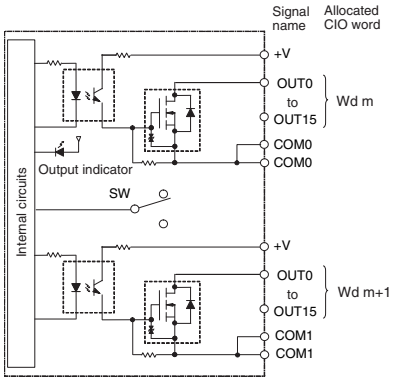

Terminal Connections

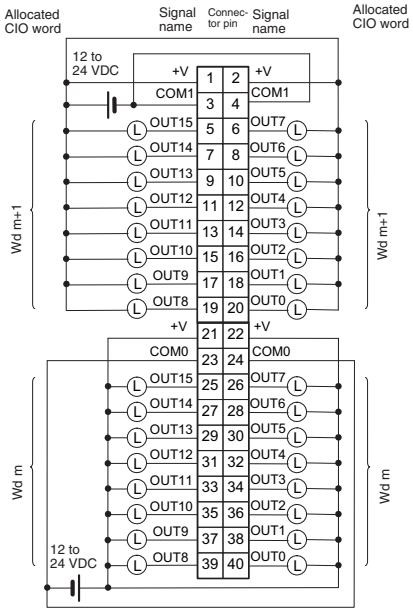

- When wiring, pay careful attention to the polarity of the external power supply. The load may operate incorrectly if the polarity is reversed.
- Be sure to wire both terminals 23 and 24 (COM0).
- Be sure to wire both terminals 3 and 4 (COM1).
- Be sure to wire both terminals 21 and 22 (+V).
- Be sure to wire both terminals 1 and 2 (+V).

● CJ1W-OD234 Transistor Output Unit (32 Points)

Name	32-point Transistor Output Unit with MIL Connector (Sinking Outputs)
Model	CJ1W-OD234
Rated Voltage	24 VDC
Operating Load Voltage Range	20.4 to 26.4 VDC
Maximum Load Current	0.5 A/point, 2 A/common, 4 A/Unit
Maximum Inrush Current	4.0 A/point, 10 ms max.
Leakage Current	0.1 mA max.
Residual Voltage	1.5 V max.
ON Response Time	15 μs max.
OFF Response Time	80 μs max.
Insulation Resistance	20 MΩ between the external terminals and the GR terminal (100 VDC)
Dielectric Strength	1,000 VAC between the external terminals and the GR terminal for 1 minute at a leakage current of 10 mA max.
Number of Circuits	32 (16 points/common, 2 circuits)
Internal Current Consumption	220 mA max.
Fuse	None
External Power Supply	20.4 to 26.4 VDC, 110 mA min.
Weight	70 g max.
Circuit Configuration	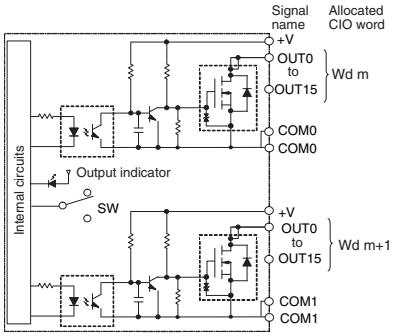

Terminal Connections

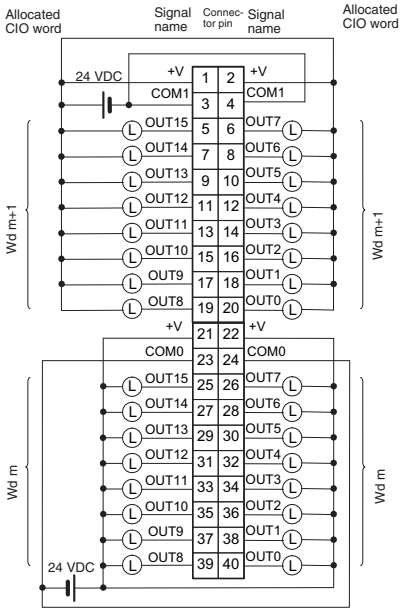

- When wiring, pay careful attention to the polarity of the external power supply. The load may operate incorrectly if the polarity is reversed.
- Be sure to wire both terminals 23 and 24 (COM0).
- Be sure to wire both terminals 3 and 4 (COM1).
- Be sure to wire both terminals 21 and 22 (+V).
- Be sure to wire both terminals 1 and 2 (+V).

● CJ1W-OD261 Transistor Output Unit (64 Points)

Name	64-point Transistor Output Unit with Fujitsu/OTAX Connectors (Sinking Outputs)
Model	CJ1W-OD261
Rated Voltage	12 to 24 VDC
Operating Load Voltage Range	10.2 to 26.4 VDC
Maximum Load Current	0.3 A/point, 1.6 A/common, 6.4 A/Unit
Maximum Inrush Current	3.0 A/point, 10 ms max.
Leakage Current	0.1 mA max.
Residual Voltage	1.5 V max.
ON Response Time	0.5 ms max.
OFF Response Time	1.0 ms max.
Insulation Resistance	20 MΩ between the external terminals and the GR terminal (100 VDC)
Dielectric Strength	1,000 VAC between the external terminals and the GR terminal for 1 minute at a leakage current of 10 mA max.
Number of Circuits	64 (16 points/common, 4 circuits)
Internal Current Consumption	5 VDC, 170 mA max.
Fuse	None
External Power Supply	10.2 to 26.4 VDC, 50 mA min.
Weight	110 g max.
Accessories	None
Circuit Configuration	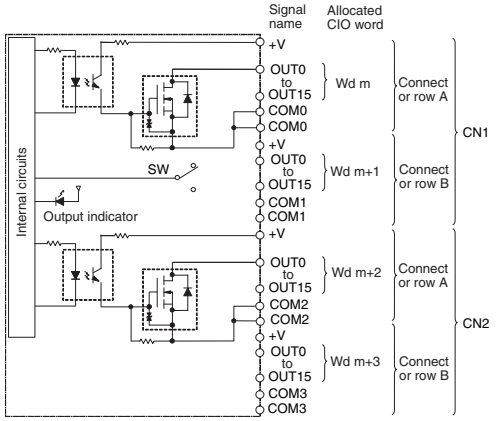

	CN1	CN2
Terminal Connections	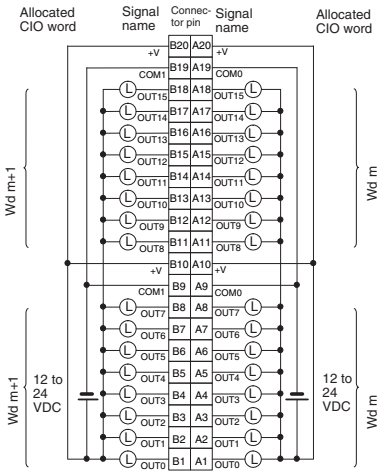 • When wiring, pay careful attention to the polarity of the external power supply. The load may operate incorrectly if the polarity is reversed. • Be sure to wire both terminals A9 and A19 (COM0) of CN1. • Be sure to wire both terminals B9 and B19 (COM1) of CN1. • Be sure to wire both terminals A10 and A20 (+V) of CN1. • Be sure to wire both terminals B10 and B20 (+V) of CN1.	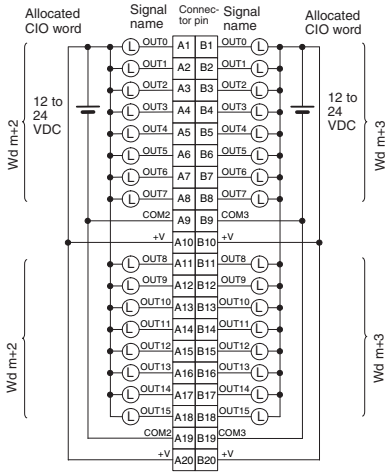 • When wiring, pay careful attention to the polarity of the external power supply. The load may operate incorrectly if the polarity is reversed. • Be sure to wire both terminals A9 and A19 (COM2) of CN2. • Be sure to wire both terminals B9 and B19 (COM3) of CN2. • Be sure to wire both terminals A10 and A20 (+V) of CN2. • Be sure to wire both terminals B10 and B20 (+V) of CN2.

● CJ1W-OD263 Transistor Output Unit (64 Points)

Name	64-point Transistor Output Unit with MIL Connectors (Sinking Outputs)
Model	CJ1W-OD263
Rated Voltage	12 to 24 VDC
Operating Load Voltage Range	10.2 to 26.4 VDC
Maximum Load Current	0.3 A/point, 1.6 A/common, 6.4 A/Unit
Maximum Inrush Current	3.0 A/point, 10 ms max.
Leakage Current	0.1 mA max.
Residual Voltage	1.5 V max.
ON Response Time	0.5 ms max.
OFF Response Time	1.0 ms max.
Insulation Resistance	20 MΩ between the external terminals and the GR terminal (100 VDC)
Dielectric Strength	1,000 VAC between the external terminals and the GR terminal for 1 minute at a leakage current of 10 mA max.
Number of Circuits	64 (16 points/common, 4 circuits)
Internal Current Consumption	170 mA max.
Fuse	None
External Power Supply	12 to 24 VDC, 50 mA min.
Weight	110 g max.
Circuit Configuration	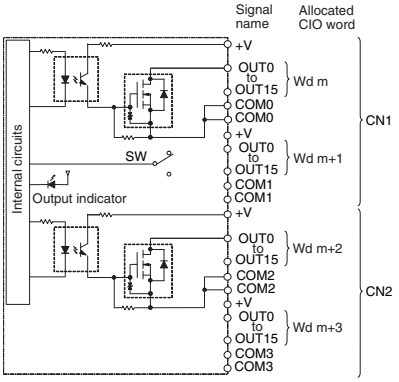

	CN1	CN2
Terminal Connections	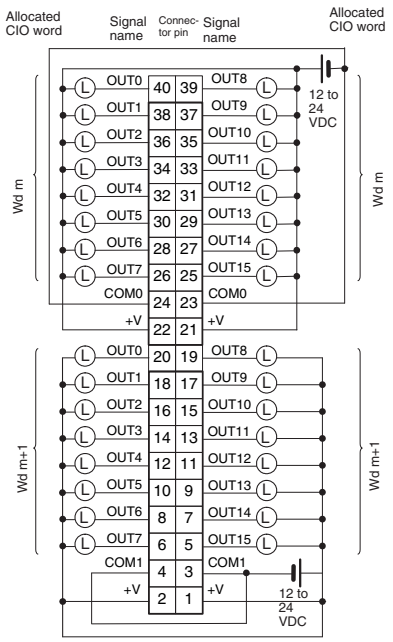 • When wiring, pay careful attention to the polarity of the external power supply. The load may operate incorrectly if the polarity is reversed. • Be sure to wire both terminals 23 and 24 (COM0) of CN1. • Be sure to wire both terminals 3 and 4 (COM1) of CN1. • Be sure to wire both terminals 21 and 22 (+V) of CN1. • Be sure to wire both terminals 1 and 2 (+V) of CN1.	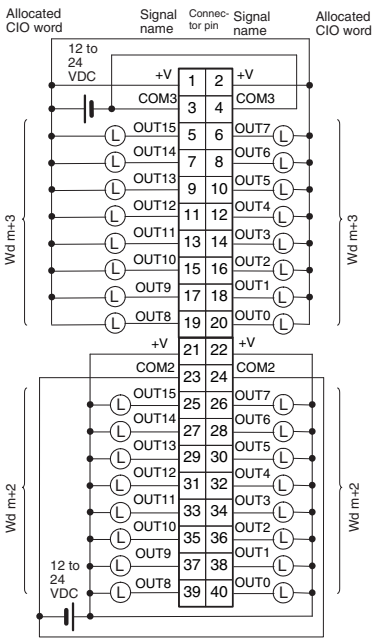 • When wiring, pay careful attention to the polarity of the external power supply. The load may operate incorrectly if the polarity is reversed. • Be sure to wire both terminals 23 and 24 (COM2) of CN2. • Be sure to wire both terminals 3 and 4 (COM3) of CN2. • Be sure to wire both terminals 21 and 22 (+V) of CN2. • Be sure to wire both terminals 1 and 2 (+V) of CN2.

● CJ1W-OD202 Transistor Output Unit (8 Points)

Name	8-point Transistor Output Unit with Terminal Block (Sourcing Outputs)
Model	CJ1W-OD202
Rated Voltage	24 VDC
Operating Load Voltage Range	20.4 to 26.4 VDC
Maximum Load Current	2 A/point, 8 A/Unit
Leakage Current	0.1 mA max.
Residual Voltage	1.5 V max.
ON Response Time	0.5 ms max.
OFF Response Time	1.0 ms max.
Load Short-circuit Protection	Detection current: 6 A min. Automatic restart after error clearance. (Refer to page A-121.)
Line Disconnection Detection	Detection current: 200 mA (Refer to page A-121.)
Insulation Resistance	20 MΩ between the external terminals and the GR terminal (100 VDC)
Dielectric Strength	1,000 VAC between the external terminals and the GR terminal for 1 minute at a leakage current of 10 mA max.
Number of Circuits	8 (4 points/common, 2 circuits)
Internal Current Consumption	110 mA max.
Fuse	None
External Power Supply	24 VDC, 50 mA min.
Weight	120 g max.
Circuit Configuration	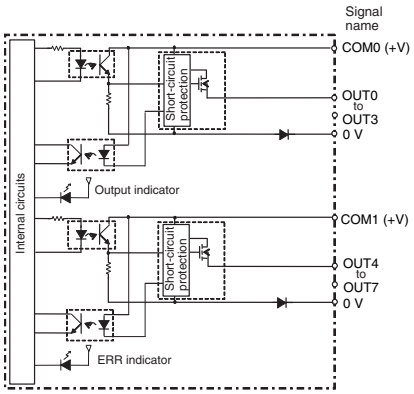 • The ERR indicator will light and the corresponding bit in A050 to A069 (Basic I/O Unit Information, two points per bit) will turn ON if an overcurrent or line disconnection is detected.

Terminal Connections	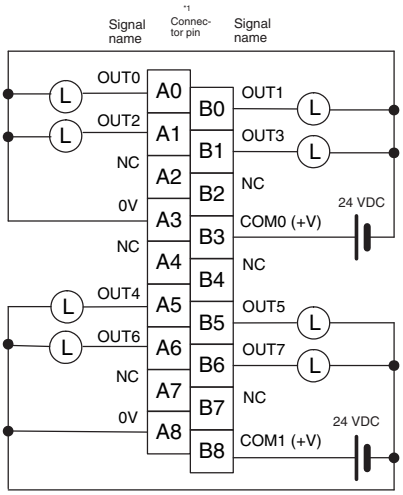 • When wiring, pay careful attention to the polarity of the external power supply. The load may operate incorrectly if the polarity is reversed.

*1 Terminal numbers A0 to A8 and B0 to B8 are used in this manual, but they are not printed on the Unit.

Note Although 16 I/O bits (1 word) are allocated, only 8 of these can be used for external I/O.

● CJ1W-OD204 Transistor Output Unit (8 Points)

Name	8-point Transistor Output Unit with Terminal Block (Sourcing Outputs)
Model	CJ1W-OD204
Rated Voltage	24 VDC
Operating Load Voltage Range	20.4 to 26.4 VDC
Maximum Load Current	0.5 A/point, 4.0 A/Unit
Leakage Current	0.1 mA max.
Residual Voltage	1.5 V max.
ON Response Time	0.5 ms max.
OFF Response Time	1.0 ms max.
Load Short-circuit Protection	Detection current: 0.7 to 2.5 A Automatic restart after error clearance. (Refer to page A-121.)
Insulation Resistance	20 MΩ between the external terminals and the GR terminal (100 VDC)
Dielectric Strength	1,000 VAC between the external terminals and the GR terminal for 1 minute at a leakage current of 10 mA max.
Number of Circuits	8 (8 points/common, 1 circuit)
Internal Current Consumption	100 mA max.
Fuse	None
External Power Supply	20.4 to 26.4 VDC, 40 mA min.
Weight	120 g max.
Circuit Configuration	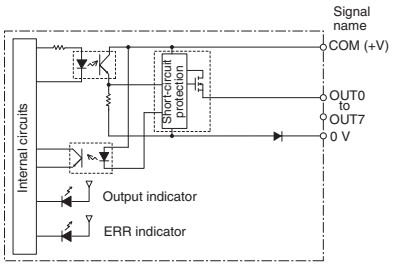 • When an overcurrent is detected, the ERR indicator will light, and the corresponding flag in the Basic I/O Unit Information Area will turn ON.
Terminal Connections	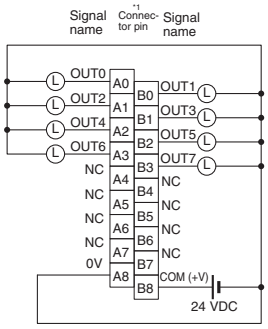 • When wiring, pay careful attention to the polarity of the external power supply. The load may operate incorrectly if the polarity is reversed.

*1 Terminal numbers A0 to A8 and B0 to B8 are used in this manual, but they are not printed on the Unit.

● CJ1W-OD212 Transistor Output Unit (16 Points)

Name	16-point Transistor Output Unit with Terminal Block (Sourcing Outputs)
Model	CJ1W-OD212
Rated Voltage	24 VDC
Operating Load Voltage Range	20.4 to 26.4 VDC
Maximum Load Current	0.5 A/point, 5.0 A/Unit
Maximum Inrush Current	0.1 mA max.
Leakage Current	1.5 V max.
ON Response Time	0.5 ms max.
OFF Response Time	1.0 ms max.
Load Short-circuit Protection	Detection current: 0.7 to 2.5 A Automatic restart after error clearance. (Refer to page A-121.)
Insulation Resistance	20 MΩ between the external terminals and the GR terminal (100 VDC)
Dielectric Strength	1,000 VAC between the external terminals and the GR terminal for 1 minute at a leakage current of 10 mA max.
Number of Circuits	16 (16 points/common, 1 circuit)
Internal Current Consumption	5 VDC, 100 mA max.
External Power Supply	20.4 to 26.4 VDC, 40 mA min.
Weight	120 g max.
Circuit Configuration	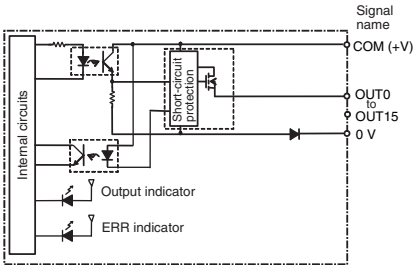 • When overcurrent is detected, the ERR indicator will light, and the corresponding flag in the Basic I/O Unit Information Area (A050 to A069) will turn ON.
Terminal Connections	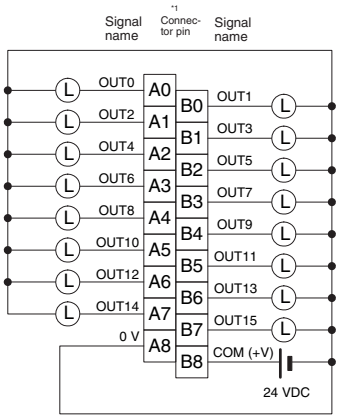 • When wiring, pay careful attention to the polarity of the external power supply. The load may operate incorrectly if the polarity is reversed.

*1 Terminal numbers A0 to A8 and B0 to B8 are used in this manual, but they are not printed on the Unit.

● CJ1W-OD232 Transistor Output Unit (32 Points)

Name	32-point Transistor Output Unit with MIL Connector (Sourcing Outputs)
Model	CJ1W-OD232
Rated Voltage	24 VDC
Operating Load Voltage Range	20.4 to 26.4 VDC
Maximum Load Current	0.5 A/point, 2.0 A/common, 4.0 A/Unit
Leakage Current	0.1 mA max.
Residual Voltage	1.5 V max.
ON Response Time	0.5 ms max.
OFF Response Time	1.0 ms max.
Load Short-circuit Protection	Detection current: 0.7 to 2.5 A Automatic restart after error clearance. (Refer to page A-121.)
Insulation Resistance	20 MΩ between the external terminals and the GR terminal (100 VDC)
Dielectric Strength	1,000 VAC between the external terminals and the GR terminal for 1 minute at a leakage current of 10 mA max.
Number of Circuits	32 (16 points/common, 2 circuits)
Internal Current Consumption	5 VDC 150 mA max.
External Power Supply	20.4 to 26.4 VDC, 70 mA min.
Weight	80 g max.
Accessories	None
Circuit Configuration	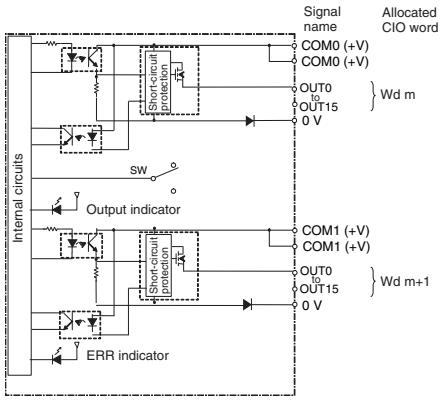 • The ERR indicator will light and the corresponding bit in A050 to A069 (Basic I/O Unit Information, one for each common) will turn ON if an overcurrent is detected.

Terminal Connections	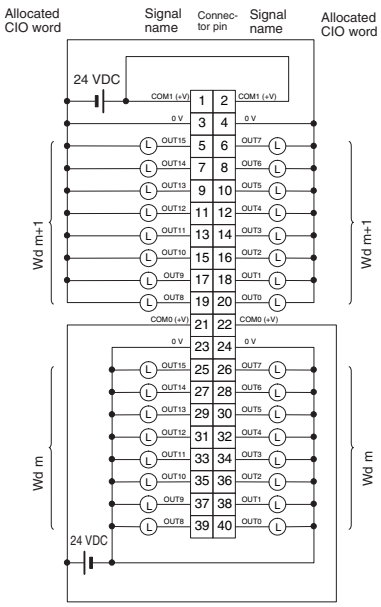 • When wiring, pay careful attention to the polarity of the external power supply. The load may operate incorrectly if the polarity is reversed. • Be sure to wire both terminals 21 and 22 (COM0 (+V)). • Be sure to wire both terminals 1 and 2 (COM1 (+V)). • Be sure to wire both terminals 3 and 4 (0 V). • Be sure to wire both terminals 23 and 24 (0 V).

● CJ1W-OD262 Transistor Output Unit (64 Points)

Name	64-point Transistor Output Unit with MIL Connectors (Sourcing Outputs)
Model	CJ1W-OD262
Rated Voltage	12 to 24 VDC
Operating Load Voltage Range	10.2 to 26.4 VDC
Maximum Load Current	0.3 A/point, 1.6 A/common, 6.4 A/Unit
Maximum Inrush Current	3.0 A/point, 10 ms max.
Leakage Current	0.1 mA max.
Residual Voltage	1.5 V max.
ON Response Time	0.5 ms max.
OFF Response Time	1.0 ms max.
Insulation Resistance	20 MΩ between the external terminals and the GR terminal (100 VDC)
Dielectric Strength	1,000 VAC between the external terminals and the GR terminal for 1 minute at a leakage current of 10 mA max.
Number of Circuits	64 (16 points/common, 4 circuits)
Internal Current Consumption	170 mA max. (5 VDC)
Fuse	None
External Power Supply	10.2 to 26.4 VDC, 50 mA min.
Weight	110 g max.
Accessories	None
Circuit Configuration	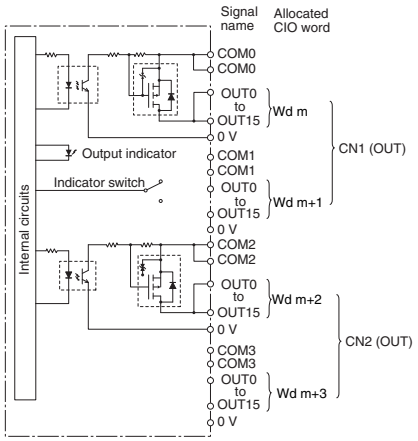

	CN1	CN2
Terminal Connections	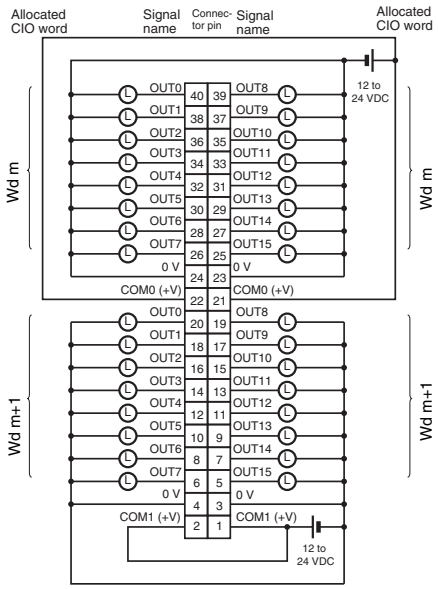 • When wiring, pay careful attention to the polarity of the external power supply. The load may operate incorrectly if the polarity is reversed. • Be sure to wire both terminals 21 and 22 (COM0 (+V)) of CN1. • Be sure to wire both terminals 1 and 2 (COM1 (+V)) of CN1. • Be sure to wire both terminals 23 and 24 (0 V) of CN1. • Be sure to wire both terminals 3 and 4 (0 V) of CN1.	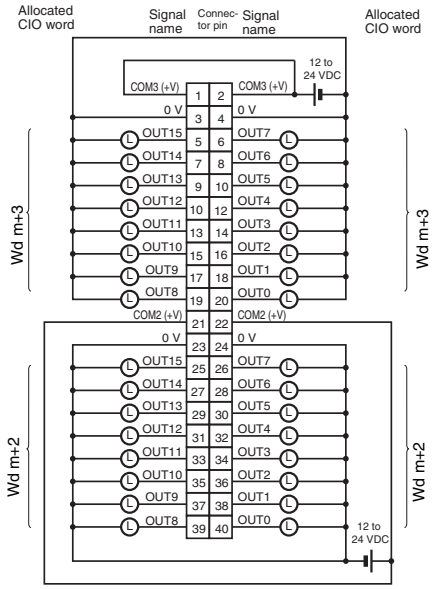 • When wiring, pay careful attention to the polarity of the external power supply. The load may operate incorrectly if the polarity is reversed. • Be sure to wire both terminals 21 and 22 (COM2 (+V)) of CN2. • Be sure to wire both terminals 1 and 2 (COM3 (+V)) of CN2. • Be sure to wire both terminals 23 and 24 (0 V) of CN2. • Be sure to wire both terminals 3 and 4 (0 V) of CN2.

Mixed I/O Units

● CJ1W-MD231 DC Input/Transistor Output Unit (24 VDC, 16 Inputs/16 Outputs)

Name	16-point DC Input/16-point Transistor Output Unit with Fujitsu/OTAX Connectors (Sinking Outputs)		
Model	CJ1W-MD231		
Output section (CN1)		**Input section (CN2)**	
Rated Voltage	12 to 24 VDC	**Rated Input Voltage**	24 VDC
Operating Load Voltage Range	10.2 to 26.4 VDC	**Operating Input Voltage**	20.4 to 26.4 VDC
Maximum Load Current	0.5 A/point, 2.0 A/Unit	**Input Impedance**	3.3 kΩ
Maximum Inrush Current	4.0 A/point, 10 ms max.	**Input Current**	7 mA typical (at 24 VDC)
Leakage Current	0.1 mA max.	**ON Voltage/ON Current**	14.4 VDC min./3 mA min.
Residual Voltage	1.5 V max.	**OFF Voltage/OFF Current**	5 VDC max./1 mA max.
ON Response Time	0.1 ms max.	**ON Response Time**	8.0 ms (default) max. (Can be set to between 0 and 32 ms in the Input Response Time Settings under the PLC Setup)*1, *2
OFF Response Time	0.8 ms max.		
No. of Circuits	16 (16 points/common, 1 circuit)	**OFF Response Time**	8.0 ms (default) max. (Can be set to between 0 and 32 ms in the Input Response Time Settings under the PLC Setup)*1, *2
Fuse	None		
External Power Supply	12 to 24 VDC, 20 mA min.	**No. of Circuits**	16 (16 points/common, 1 circuit)
		Number of Simultaneously ON Points	75% (at 24 VDC)
Insulation Resistance	20 MΩ between the external terminals and the GR terminal (at 100 VDC)		
Dielectric Strength	1,000 VAC between the external terminals and the GR terminal for 1 minute at a leakage current of 10 mA max.		
Internal Current Consumption	5 VDC 130 mA max.		
Weight	90 g max.		
Accessories	None		
Circuit Configuration	CN1 (OUT)	CN2 (IN)	

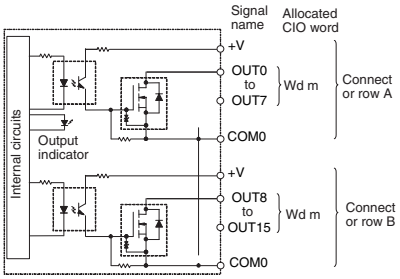

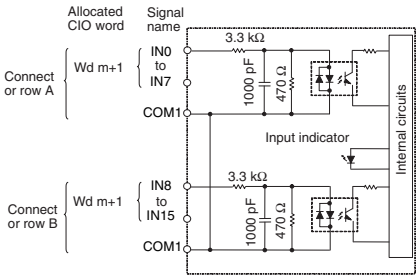

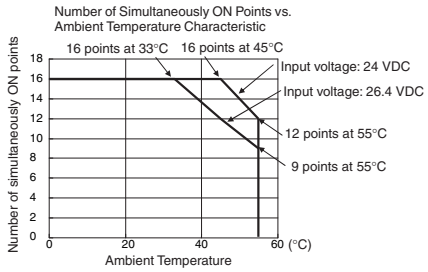

	CN1 (OUT)	CN2 (IN)
Terminal Connections	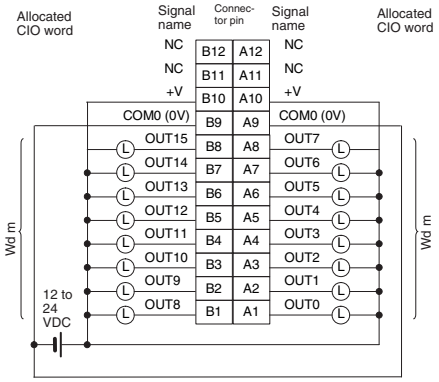 • When wiring, pay careful attention to the polarity of the external power supply. The load may operate incorrectly if polarity is reversed. • Be sure to wire both pins A9 and B9 (COM0 (0 V)) of CN1. • Be sure to wire both pins A10 and B10 (+V) of CN1.	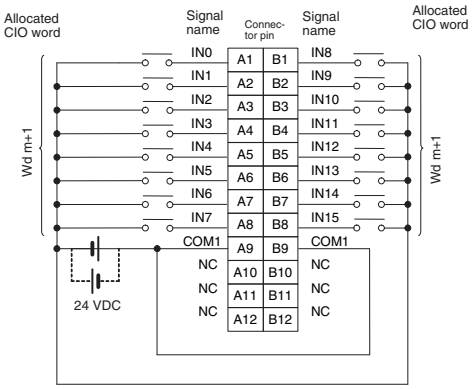 • Be sure to wire both pins A9 and B9 (COM1) of CN2, and set the same polarity for both pins.

*1 The ON response time will be 20 μs maximum and OFF response time will be 400 μs maximum even if the response times are set to 0 ms due to internal element delays.

*2 The unit accepts input signals with longer signal widths than the Input Response Time Settings under the PLC Setup.

● CJ1W-MD233 DC Input/Transistor Output Unit (24 VDC, 16 Inputs/16 Outputs)

Name	16-point DC Input/16-point Transistor Output Unit with MIL Connectors (Sinking Outputs)		
Model	CJ1W-MD233		
Output section (CN1)		**Input section (CN2)**	
Rated Voltage	12 to 24 VDC	**Rated Input Voltage**	24 VDC
Operating Load Voltage Range	10.2 to 26.4 VDC	**Operating Input Voltage**	20.4 to 26.4 VDC
Maximum Load Current	0.5 A/point, 2.0 A/Unit	**Input Impedance**	3.3 kΩ
Maximum Inrush Current	4.0 A/point, 10 ms max.	**Input Current**	7 mA typical (at 24 VDC)
Leakage Current	0.1 mA max.	**ON Voltage/ON Current**	14.4 VDC min./3 mA min.
Residual Voltage	1.5 V max.	**OFF Voltage/OFF Current**	5 VDC max./1 mA max.
ON Response Time	0.1 ms max.	**ON Response Time**	8.0 ms (default) max. (Can be set to between 0 and 32 ms in the Input Response Time Settings under the PLC Setup)*1, *2
OFF Response Time	0.8 ms max.		
No. of Circuits	16 (16 points/common, 1 circuit)	**OFF Response Time**	8.0 ms (default) max. (Can be set to between 0 and 32 ms in the Input Response Time Settings under the PLC Setup)*1, *2
Fuse	None		
External Power Supply	12 to 24 VDC, 20 mA min.	**No. of Circuits**	16 (16 points/common, 1 circuit)
		Number of Simultaneously ON Points	75% (at 24 VDC)
Insulation Resistance	20 MΩ between the external terminals and the GR terminal (at 100 VDC)		
Dielectric Strength	1,000 VAC between the external terminals and the GR terminal for 1 minute at a leakage current of 10 mA max.		
Internal Current Consumption	5 VDC 130 mA max.		
Weight	90 g max.		
Accessories	None		
Circuit Configuration	CN1 (OUT)	CN2 (IN)	

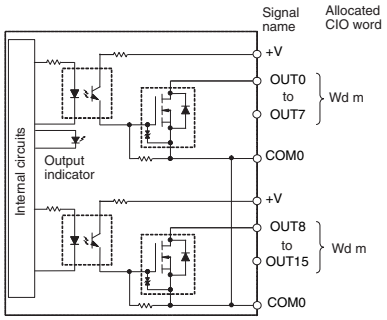

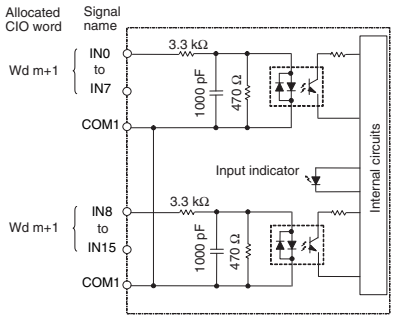

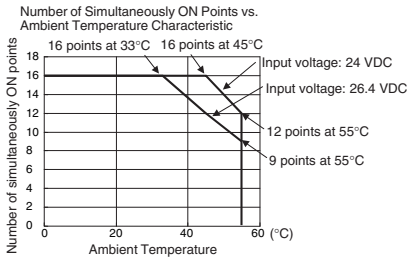

	CN1 (OUT)	CN2 (IN)
Terminal Connections	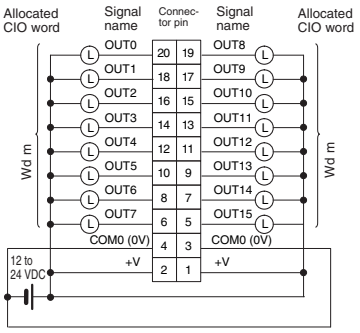 • When wiring, pay careful attention to the polarity of the external power supply. The load may operate incorrectly if polarity is reversed. • Be sure to wire both terminals 3 and 4 (COM0 (0 V)) of CN1. • Be sure to wire both terminals 1 and 2 (+V) of CN1.	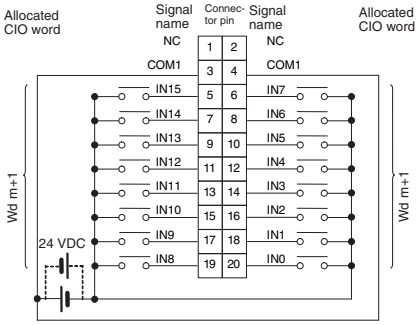 • Be sure to wire both pins 3 and 4 (COM1) of CN2, and set the same polarity for both pins.

*1 The ON response time will be 20 μs maximum and OFF response time will be 400 μs maximum even if the response times are set to 0 ms due to internal element delays.

*2 The unit accepts input signals with longer signal widths than the Input Response Time Settings under the PLC Setup.

● CJ1W-MD261 DC Input/Transistor Output Unit (24 VDC 32 Inputs/32 Outputs)

Name	32-point DC Input/32-point Transistor Output Unit with Fujitsu/OTAX Connectors (Sinking Outputs)		
Model	CJ1W-MD261		
Output section (CN1)		**Input section (CN2)**	
Rated Voltage	12 to 24 VDC	**Rated Input Voltage**	24 VDC
Operating Load Voltage Range	10.2 to 26.4 VDC	**Operating Input Voltage**	20.4 to 26.4 VDC
Maximum Load Current	0.3 A/point, 1.6 A/common, 3.2 A/Unit	**Input Impedance**	5.6 kΩ
Maximum Inrush Current	3.0 A/point, 10 ms max.	**Input Current**	4.1 mA typical (at 24 VDC)
Leakage Current	0.1 mA max.	**ON Voltage/ON Current**	19.0 VDC min./3 mA min. *3
Residual Voltage	1.5 V max.	**OFF Voltage/OFF Current**	5 VDC max./1 mA max.
ON Response Time	0.5 ms max.	**ON Response Time**	8.0 ms (default) max. (Can be set to between 0 and 32 ms in the Input Response Time Settings under the PLC Setup)*1, *2
OFF Response Time	1.0 ms max.		
No. of Circuits	32 (16 points/common, 2 circuits)	**OFF Response Time**	8.0 ms (default) max. (Can be set to between 0 and 32 ms in the Input Response Time Settings under the PLC Setup)*1, *2
Fuse	None		
External Power Supply	12 to 24 VDC, 30 mA min.	**No. of Circuits**	32 (16 points/common, 2 circuits)
		Number of Simultaneously ON Points	75% (24 points) (at 24 VDC)
Insulation Resistance	20 MΩ between the external terminals and the GR terminal (at 100 VDC)		
Dielectric Strength	1,000 VAC between the external terminals and the GR terminal for 1 minute at a leakage current of 10 mA max.		
Internal Current Consumption	5 VDC 140 mA max.		
Weight	110 g max.		
Accessories	None		

Circuit Configuration

CN1 (OUT)

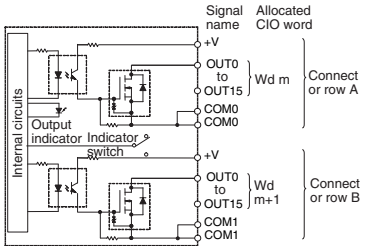

CN2 (IN)

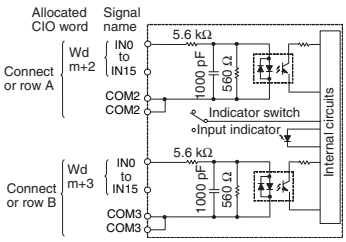

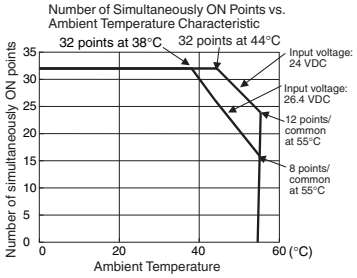

	CN1 (OUT)	CN2 (IN)
Terminal Connections	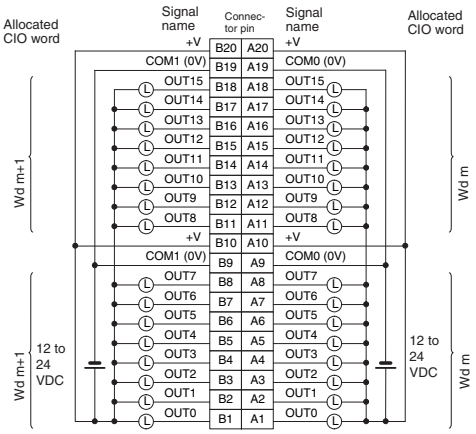 • Be sure to wire both terminals A19 and A9 (COM0 (0 V)) of CN1. • Be sure to wire both terminals B19 and B9 (COM1 (0 V)) of CN1. • Be sure to wire both terminals A20 and A10 (+V) of CN1. • Be sure to wire both terminals B20 and B10 (+V) of CN1. • When wiring, pay careful attention to the polarity of the external power supply. The load may operate incorrectly if polarity is reversed.	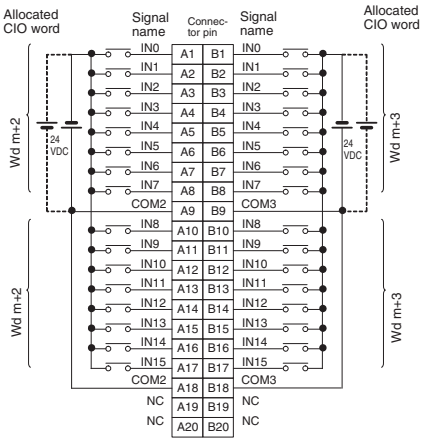 • Be sure to wire both pins A9 and A18 (COM2) of CN2, and set the same polarity for both pins. • Be sure to wire both pins B9 and B18 (COM3) of CN2, and set the same polarity for both pins.

*1 The ON response time will be 120 μs maximum and OFF response time will be 400 μs maximum even if the response times are set to 0 ms due to internal element delays.

*2 The unit accepts input signals with longer signal widths than the Input Response Time Settings under the PLC Setup.

*3 Observe the following restrictions when connecting to a 2-wire sensor.

- Make sure the input power supply voltage is larger than the ON voltage (19 V) plus the residual voltage of the sensor (approx. 3 V).
- Use a sensor with a minimum load current of 3 mA min.
- Connect bleeder resistance if you connect a sensor with a minimum load current of 5 mA or higher.

● CJ1W-MD263 DC Input/Transistor Output Unit (24 VDC 32 Inputs/32 Outputs)

Name	32-point DC Input/32-point Transistor Output Unit with MIL Connectors (Sinking Outputs)		
Model	CJ1W-MD263		
Output section (CN1)		**Input section (CN2)**	
Rated Voltage	12 to 24 VDC	**Rated Input Voltage**	24 VDC
Operating Load Voltage Range	10.2 to 26.4 VDC	**Operating Input Voltage**	20.4 to 26.4 VDC
Maximum Load Current	0.3 A/point, 1.6 A/common, 3.2 A/Unit	**Input Impedance**	5.6 kΩ
Maximum Inrush Current	3.0 A/point, 10 ms max.	**Input Current**	4.1 mA typical (at 24 VDC)
Leakage Current	0.1 mA max.	**ON Voltage/ON Current**	19.0 VDC min./3 mA min.*3
Residual Voltage	1.5 V max.	**OFF Voltage/OFF Current**	5 VDC max./1 mA max.
ON Response Time	0.5 ms max.	**ON Response Time**	8.0 ms (default) max. (Can be set to between 0 and 32 ms in the Input Response Time Settings under the PLC Setup)*1, *2
OFF Response Time	1.0 ms max.		
No. of Circuits	32 (16 points/common, 2 circuits)	**OFF Response Time**	8.0 ms (default) max. (Can be set to between 0 and 32 ms in the Input Response Time Settings under the PLC Setup)*1, *2
Fuse	None		
External Power Supply	12 to 24 VDC, 30 mA min.	**No. of Circuits**	32 (16 points/common, 2 circuits)
		Number of Simultaneously ON Points	75% (24 points) (at 24 VDC)
Insulation Resistance	20 MΩ between the external terminals and the GR terminal (at 100 VDC)		
Dielectric Strength	1,000 VAC between the external terminals and the GR terminal for 1 minute at a leakage current of 10 mA max.		
Internal Current Consumption	5 VDC 140 mA max.		
Weight	110 g max.		
Accessories	None		

Circuit Configuration

CN1 (OUT)

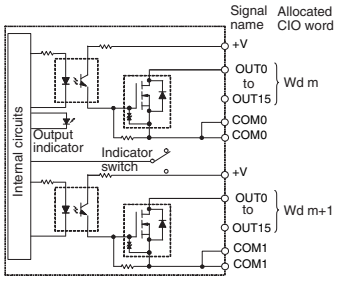

CN2 (IN)

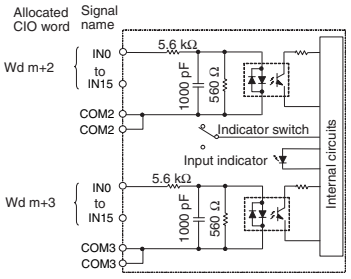

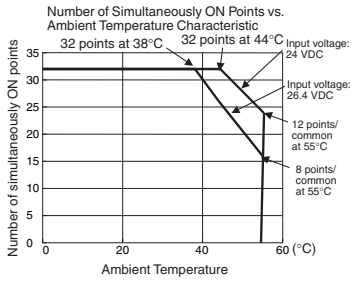

	CN1 (OUT)	CN2 (IN)
Terminal Connections	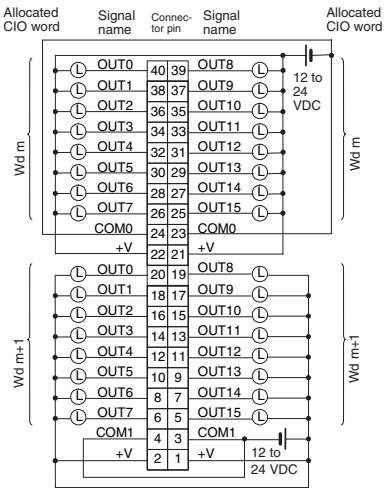 • Be sure to wire both terminals 23 and 24 (COM0) of CN1. • Be sure to wire both terminals 3 and 4 (COM1) of CN1. • Be sure to wire both terminals 21 and 22 (+V) of CN1. • Be sure to wire both terminals 1 and 2 (+V) of CN1. • When wiring, pay careful attention to the polarity of the external power supply. The load may operate incorrectly if polarity is reversed.	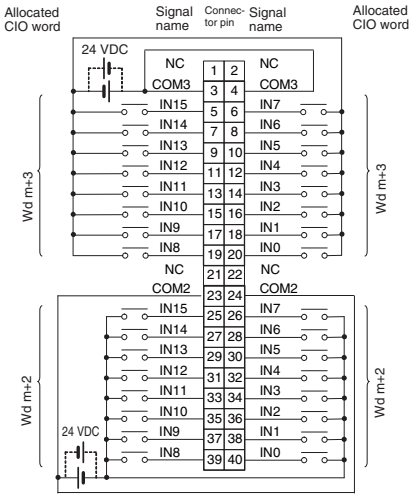 • Be sure to wire both pins 23 and 24 (COM2) of CN2, and set the same polarity for both pins. • Be sure to wire both pins 3 and 4 (COM3) of CN2, and set the same polarity for both pins.

*1 The ON response time will be 120 µs maximum and OFF response time will be 400 µs maximum even if the response times are set to 0 ms due to internal element delays.

*2 The unit accepts input signals with longer signal widths than the Input Response Time Settings under the PLC Setup.

*3 Observe the following restrictions when connecting to a 2-wire sensor.

- Make sure the input power supply voltage is larger than the ON voltage (19 V) plus the residual voltage of the sensor (approx. 3 V).
- Use a sensor with a minimum load current of 3 mA min.
- Connect bleeder resistance if you connect a sensor with a minimum load current of 5 mA or higher.

● CJ1W-MD232 DC Input/Transistor Output Unit (24 VDC, 16 inputs/16 Outputs)

Name	16-point DC Input/16-point Transistor Output Unit with MIL Connectors (Sourcing Outputs)		
Model	CJ1W-MD232		
Output section (CN1)		**Input section (CN2)**	
Rated Voltage	24 VDC	**Rated Input Voltage**	24 VDC
Operating Load Voltage Range	20.4 to 26.4 VDC	**Operating Input Voltage**	20.4 to 26.4 VDC
Maximum Load Current	0.5 A/point, 2.0 A/Unit	**Input Impedance**	3.3 kΩ
Leakage Current	0.1 mA max.	**Input Current**	7 mA typical (at 24 VDC)
Residual Voltage	1.5 V max.	**ON Voltage/ON Current**	14.4 VDC min./3 mA min.
ON Response Time	0.5 ms max.	**OFF Voltage/OFF Current**	5 VDC max./1 mA max.
OFF Response Time	1.0 ms max.	**ON Response Time**	8.0 ms (default) max. (Can be set to between 0 and 32 ms in the Input Response Time Settings under the PLC Setup)*1, *2
Load Short-circuit Protection	Detection current: 0.7 to 2.5 A min. Automatic restart after error clearance. (Refer to page A-123.)	**OFF Response Time**	8.0 ms (default) max. (Can be set to between 0 and 32 ms in the Input Response Time Settings under the PLC Setup)*1, *2
No. of Circuits	16 (16 points/common, 1 circuit)	**No. of Circuits**	16 (16 points/common, 1 circuit)
External Power Supply	20.4 to 26.4 VDC, 40 mA min.	**Number of Simultaneously ON Points**	75% (at 24 VDC)
Insulation Resistance	20 MΩ between the external terminals and the GR terminal (at 100 VDC)		
Dielectric Strength	1,000 VAC between the external terminals and the GR terminal for 1 minute at a leakage current of 10 mA max.		
Internal Current Consumption	5 VDC 130 mA max.		
Weight	100 g max.		
Accessories	None		

Circuit Configuration

CN1 (OUT)

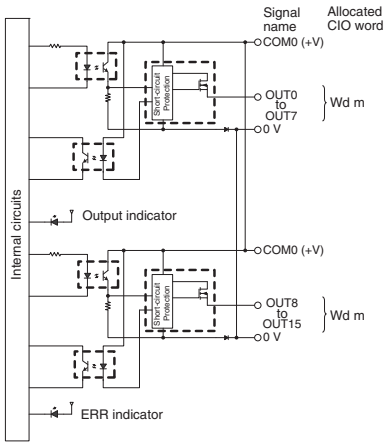

CN2 (IN)

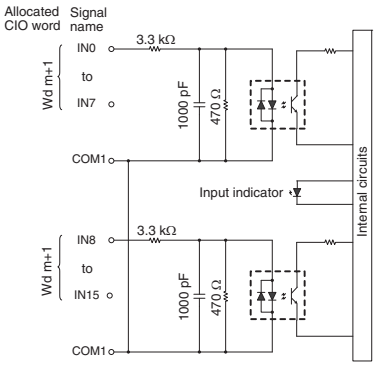

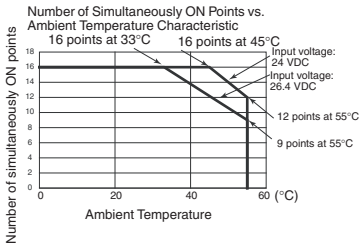

	CN1 (OUT)	CN2 (IN)
Terminal Connections	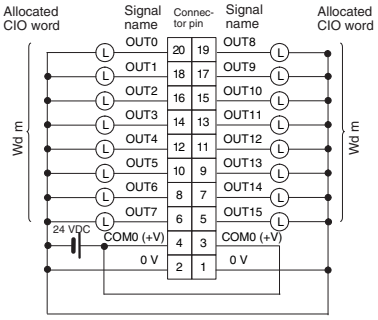 • When wiring, pay careful attention to the polarity of the external power supply. The load may operate incorrectly if polarity is reversed. • Be sure to wire both terminals 3 and 4 (COM0 (+V)) of CN1. • Be sure to wire both terminals 1 and 2 ((0 V)) of CN1.	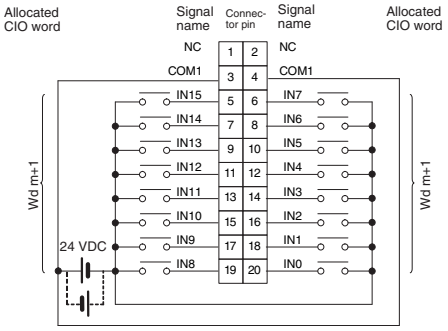 • Be sure to wire both pins 3 and 4 (COM1) of CN2, and set the same polarity for both pins.

*1 The ON response time will be 20 μs maximum and OFF response time will be 400 μs maximum even if the response times are set to 0 ms due to internal element delays.

*2 The unit accepts input signals with longer signal widths than the Input Response Time Settings under the PLC Setup.

● CJ1W-MD563 TTL I/O Unit (32 Inputs/32 Outputs)

Name	32-point Input /32-point Output TTL I/O Unit with MIL Connectors		
Model	CJ1W-MD563		
Output section (CN1)		**Input section (CN2)**	
Rated Voltage	5 VDC±10%	**Rated Input Voltage**	5 VDC±10%
Operating Load Voltage Range	4.5 to 5.5 VDC	**Input Impedance**	1.1 kΩ
Maximum Load Current	35 mA/point, 560 mA/common, 1.12 A/Unit	**Input Current**	Approx. 3.5 mA (at 5 VDC)
Leakage Current	0.1 mA max.	**ON Voltage**	3.0 VDC min.
Residual Voltage	0.4 V max.	**OFF Voltage**	1.0 VDC max.
ON Response Time	0.2 ms max.	**ON Response Time**	8.0 ms (default) max. (Can be set to between 0 and 32 ms in the Input Response Time Settings under the PLC Setup)*1, *2
OFF Response Time	0.3 ms max.	**OFF Response Time**	8.0 ms (default) max. (Can be set to between 0 and 32 ms in the Input Response Time Settings under the PLC Setup)*1, *2
No. of Circuits	32 points (16 points/common, 2 circuits)		
Fuse	None	**No. of Circuits**	32 points (16 points/common, 2 circuits)
External Power Supply	5 VDC±10%, 40 mA min. (1.2 mA × No. of ON points)	**Number of Simultaneously ON Points**	100% (16 points/common)
Insulation Resistance	20 MΩ between the external terminals and the GR terminal (at 100 VDC)		
Dielectric Strength	1,000 VAC between the external terminals and the GR terminal for 1 minute at a leakage current of 10 mA max.		
Internal Current Consumption	5 VDC 190 mA max.		
Weight	110 g max.		
Accessories	None		
Circuit Configuration	CN1 (OUT)	CN2 (IN)	

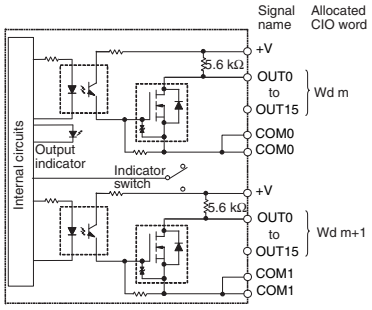

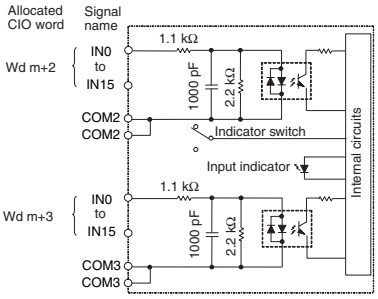

	CN1 (OUT)	CN2 (IN)
Terminal Connections	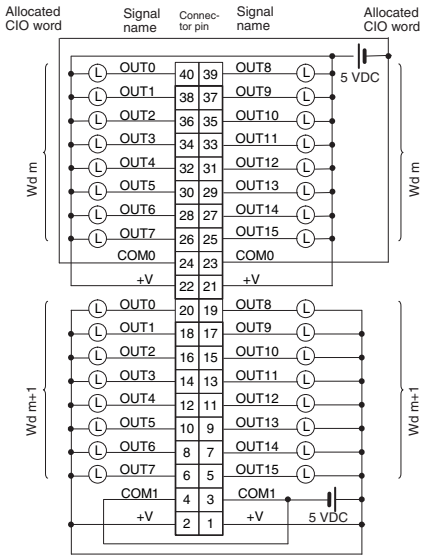 • When wiring, pay careful attention to the polarity of the external power supply. The load may operate incorrectly if the polarity is reversed. • Be sure to wire both terminals 23 and 24 (COM0) of CN1. • Be sure to wire both terminals 3 and 4 (COM1) of CN1. • Be sure to wire both terminals 21 and 22 (+V) of CN1. • Be sure to wire both terminals 1 and 2 (+V) of CN1.	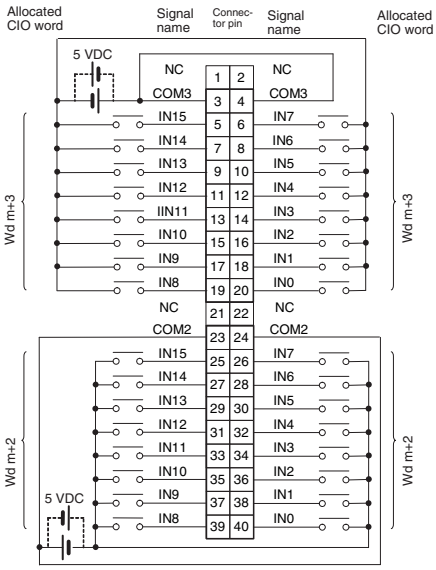 • Be sure to wire both pins 23 and 24 (COM2) of CN2, and set the same polarity for both pins. • Be sure to wire both pins 3 and 4 (COM3) of CN2, and set the same polarity for both pins.

*1 The ON response time will be 120 μs maximum and OFF response time will be 400 μs maximum even if the response times are set to 0 ms due to internal element delays.

*2 The unit accepts input signals with longer signal widths than the Input Response Time Settings under the PLC Setup.

A-1-3 Precautions on Contact Output Units

Service Life Expectancy of CJ1W-OC201/211 Relays

The service life expectancy of the relays (NY-24W-K-IE) in the CJ1W-OC201/211 Contact Output Units is shown in the following diagrams. Use the diagrams to calculate the relay service life based on the operating conditions, and replace the relay before the end of its service life.

Contact Current vs. Service Life Characteristic

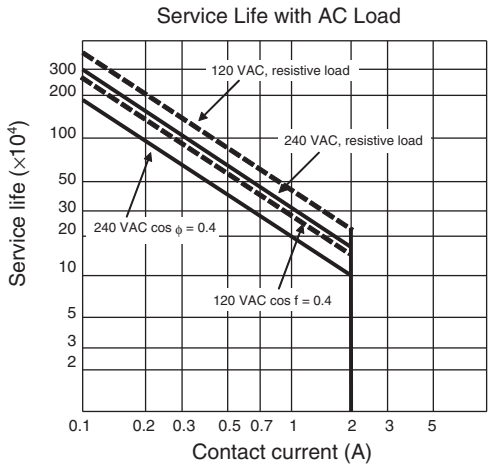

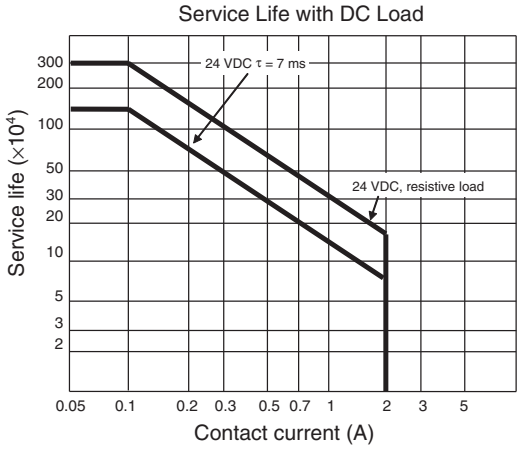

Switching frequency: 1,800 operations/hour max.

Precautions for Correct Use

The diagrams show the life expectancy of the relay itself. Do not use a contact current, therefore, that exceeds the maximum switching capacity specified in the specifications for each Contact Output Unit. If a switching capacity exceeding the specifications is used, the reliability and life expectancy of other parts will be reduced and the Unit may malfunction.

Inductive Load

The life of the Relay varies with the load inductance. If any inductive load is connected to the Contact Output Unit, use an arc killer with the Contact Output Unit using an inductive load. (See next page.)

Be sure to connect a diode in parallel with every DC inductive load that is connected to the Contact Output Unit.

Contact Protection Circuit

Arc killers are used with the Contact Output Unit in order to prolong the life of each Relay mounted to the Contact Output Unit, prevent noise, and reduce the generation of carbide and nitrate deposits. However, if arc killers are used incorrectly, they can reduce relay life. Using an arc killer can also cause a delay in the resetting time (shut-off time). Arc killer circuit examples are listed in the following table.

Circuit		Current		Characteristic	Required element
		AC	DC		
CR method	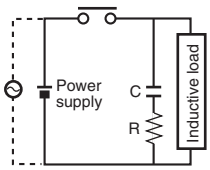	Yes	Yes	If the load is a relay or solenoid, there is a time lag between the moment the circuit is opened and the moment the load is reset. If the supply voltage is 24 or 48 V, insert the arc killer in parallel with the load. If the supply voltage is 100 to 200 V, insert the arc killer between the contacts.	The capacitance of the capacitor must be 1 to 0.5 μF per contact current of 1 A and resistance of the resistor must be 0.5 to 1 Ω per contact voltage of 1 V. These values, however, vary with the load and the characteristics of the relay. Decide these values from experiments, and take into consideration that the capacitance suppresses spark discharge when the contacts are separated and the resistance limits the current that flows into the load when the circuit is closed again. The dielectric strength of the capacitor must be 200 to 300 V. If the circuit is an AC circuit, use a capacitor with no polarity.
Diode method	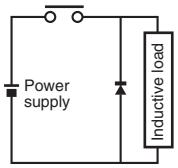	No	Yes	The diode connected in parallel with the load changes energy accumulated by the coil into a current, which then flows into the coil so that the current will be converted into Joule heat by the resistance of the inductive load. This time lag, between the moment the circuit is opened and the moment the load is reset, caused by this method is longer than that caused by the CR method.	The reversed dielectric strength value of the diode must be at least 10 times as large as the circuit voltage value. The forward current of the diode must be the same as or larger than the load current. The reversed dielectric strength value of the diode may be two to three times larger than the supply voltage if the arc killer is applied to electronic circuits with low circuit voltages.
Varistor method	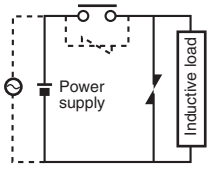	Yes	Yes	The varistor method prevents the imposition of high voltage between the contacts by using the constant voltage characteristic of the varistor. There is time lag between the moment the circuit is opened and the moment the load is reset. If the supply voltage is 24 or 48 V, insert the varistor in parallel with the load. If the supply voltage is 100 to 200 V, insert the varistor between the contacts.	---

Precautions for Correct Use

Do not connect a capacitor as an arc killer in parallel with an inductive load as shown in the following diagram. This arc killer is very effective for preventing spark discharge at the moment when the circuit is opened. However, when the contacts are closed, the contacts may be welded due to the current charged in the capacitor.

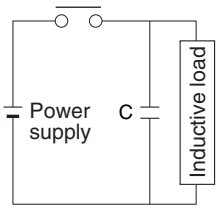

DC inductive loads can be more difficult to switch than resistive loads. If appropriate arc killers are used, however, DC inductive loads will be as easy to switch as resistive loads.

A-1-4 Connecting Connector-Terminal Block Conversion Units and I/O Relay Terminals

Patterns for Combining Connector-Terminal Block Conversion Units and I/O Relay Terminals

The following patterns can be used to connect Basic I/O Units with Connectors to OMRON Connector-Terminal Block Conversion Units and I/O Relay Terminals using OMRON Connecting Cables.

● Connection Patterns for Connector-Terminal Block Conversion Units

Pattern	Configuration	Number of connectors	Branching
A	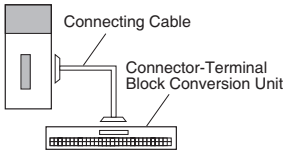	1	None
B	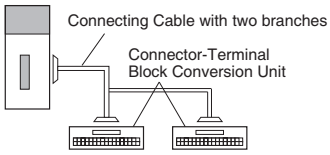		2 branches
C	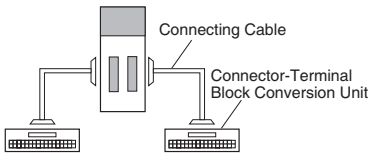	2	None
D	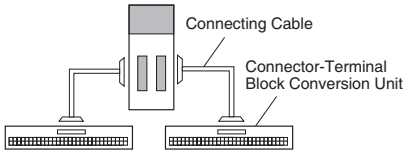		
E	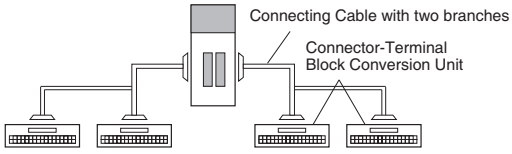		2 branches

● Connection Patterns for I/O Relay Terminals

Pattern	Configuration
A	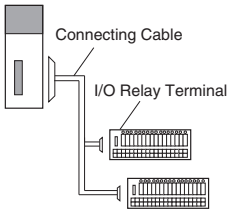
B	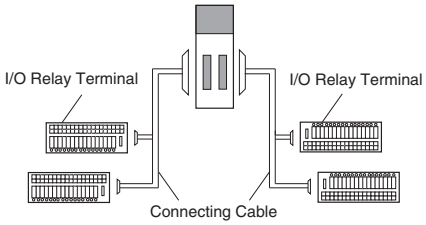
C	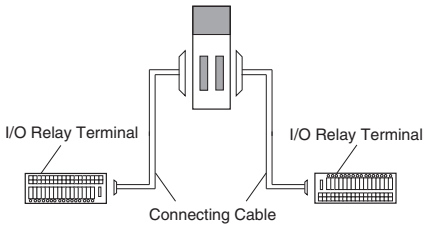

Combinations of Connections

Combinations of OMRON Connecting Cables with Connector-Terminal Block Conversion Units and I/O Relay Terminals are shown below.

Refer to the pages given in the right columns for connection diagrams and details on the Connector-Terminal Block Conversion Units and Connecting Cables.

● Connections to Connector-Terminal Block Conversion Units

Unit	I/O capacity	Number of connectors	Polarity	Connection pattern*1	Number of branches	Connecting Cable	Connector-Terminal Block Conversion Unit			
							Model	Connection method	Common terminal	Connection diagram
CJ1W-ID231	32 inputs	1 Fujitsu/OTAX connector (40p)	NPN/PNP	A	None	XW2Z-□□□B	XW2K-40G-O32A	Push in	None	A-75
							XW2K-40G-O32A-IN (*)	Push in	Yes	A-75
							XW2R-J34GD-C1	Phillips screw	None	A-76
							XW2R-E34GD-C1	Slotted screw	None	A-76
							XW2R-N32GD-C1-COM (*)	e-CON	Yes	-
				B	2	XW2Z-□□□D	XW2K-20G-T (2 Units)	Push in	None	-
							XW2K-20G-O16A-IN (*)	Push in	Yes	A-76
							XW2D-20G6 (2 Units)	Phillips screw	None	-
							XW2R-E20GD-T (2 Units)	Slotted screw	None	-
							XW2R-N16GD-C1-COM (2 Units) (*)	e-CON	Yes	-
CJ1W-ID232 CJ1W-ID233	32 inputs	1 MIL connector (40p)	NPN/PNP	A	None	XW2Z-□□□K	XW2K-40G-O32C	Push in	None	A-77
							XW2K-40G-O16C-IN (*)	Push in	Yes	A-77
							XW2R-J34GD-C2	Phillips screw	None	A-78
							XW2R-E34GD-C2	Slotted screw	None	A-78
							XW2R-N32GD-C2-COM (*)	e-CON	Yes	-
				B	2	XW2Z-□□□N	XW2K-20G-T (2 Units)	Push in	None	-
							XW2K-20G-O16C-IN (*)	Push in	Yes	A-78
							XW2D-20G6 (2 Units)	Phillips screw	None	-
							XW2R-E20GD-T (2 Units)	Slotted screw	None	-
							XW2R-N16GD-C1-COM (2 Units) (*)	e-CON	Yes	-
CJ1W-ID261	64 inputs	2 Fujitsu/OTAX connectors (40p)	NPN/PNP	D	None	XW2Z-□□□B	XW2K-40G-O32A	Push in	None	A-75
							XW2K-40G-O32A-IN (*)	Push in	Yes	A-75
							XW2R-J34GD-C1	Phillips screw	None	A-76
							XW2R-E34GD-C1	Slotted screw	None	A-76
							XW2R-N32GD-C1-COM (*)	e-CON	Yes	-
				E	2	XW2Z-□□□D	XW2K-20G-T (2 Units)	Push in	None	-
							XW2K-20G-O16A-IN (*)	Push in	Yes	A-76
							XW2D-20G6 (2 Units)	Phillips screw	None	-
							XW2R-E20GD-T (2 Units)	Slotted screw	None	-
							XW2R-N16GD-C1-COM (2 Units) (*)	e-CON	Yes	-

Unit	I/O capacity	Number of connectors	Polarity	Connection pattern*1	Number of branches	Connecting Cable	Connector-Terminal Block Conversion Unit			
							Model	Connection method	Common terminal	Connection diagram
CJ1W-ID262	64 inputs	2 MIL connectors (40p)	NPN/PNP	D	None	XW2Z-□□□K	XW2K-40G-O32C	Push in	None	A-77
							XW2K-40G-O32C-IN (*)	Push in	Yes	A-77
							XW2R-J34GD-C2	Phillips screw	None	A-78
							XW2R-E34GD-C2	Slotted screw	None	A-78
							XW2R-N32GD-C2-COM (*)	e-CON	Yes	-
				E	2	XW2Z-□□□N	XW2K-20G-T (2 Units)	Push in	None	-
							XW2K-20G-O16C-IN (*)	Push in	Yes	A-78
							XW2D-20G6 (2 Units)	Phillips screw	None	-
							XW2R-E20GD-T (2 Units)	Slotted screw	None	-
							XW2R-N16GD-C1-COM (2 Units) (*)	e-CON	Yes	-
CJ1W-OD231	32 outputs	1 Fujitsu/OTAX connector (40p)	NPN	A	None	XW2Z-□□□B	XW2K-40G-O32B	Push in	None	A-79
							XW2K-40G-O32B-OUT	Push in	Yes	A-79
							XW2R-J34GD-C3	Phillips screw	None	A-80
							XW2R-E34GD-C3	Slotted screw	None	A-80
				B	2	XW2Z-□□□D	XW2K-20G-T (2 Units)	Push in	None	-
							XW2K-20G-O16B-OUT	Push in	Yes	A-80
							XW2D-20G6 (2 Units)	Phillips screw	None	-
							XW2R-E20GD-T (2 Units)	Slotted screw	None	-
CJ1W-OD232	32 outputs	2 MIL connectors (40p)	PNP	A	None	XW2Z-□□□K	XW2K-40G-O32C	Push in	None	A-79
							XW2K-40G-O32C-OUT-P	Push in	Yes	A-79
							XW2R-J34GD-C3	Phillips screw	None	A-80
							XW2R-E34GD-C3	Slotted screw	None	A-80
				B	2	XW2Z-□□□N	XW2K-20G-T (2 Units)	Push in	None	-
							XW2K-20G-O16C-OUT-P	Push in	Yes	A-80
							XW2D-20G6 (2 Units)	Phillips screw	None	-
							XW2R-E20GD-T (2 Units)	Slotted screw	None	-
CJ1W-OD233 CJ1W-OD234	32 outputs	2 MIL connectors (40p)	NPN	A	None	XW2Z-□□□K	XW2K-40G-O32C	Push in	None	A-79
							XW2K-40G-O32C-OUT	Push in	Yes	A-79
							XW2R-J34GD-C3	Phillips screw	None	A-80
							XW2R-E34GD-C3	Slotted screw	None	A-80
				B	2	XW2Z-□□□N	XW2K-20G-T (2 Units)	Push in	None	-
							XW2K-20G-O16C-OUT	Push in	Yes	A-80
							XW2D-20G6 (2 Units)	Phillips screw	None	-
							XW2R-E20GD-T (2 Units)	Slotted screw	None	-
CJ1W-OD261	64 outputs	1 Fujitsu/OTAX connector (40p)	NPN	D	None	XW2Z-□□□B	XW2K-40G-O32C	Push in	None	A-79
							XW2K-40G-O32C-OUT	Push in	Yes	A-79
							XW2R-J34GD-C3	Phillips screw	None	A-80
							XW2R-E34GD-C3	Slotted screw	None	A-80
				E	2	XW2Z-□□□D	XW2K-20G-T (2 Units)	Push in	None	-
							XW2K-20G-O16B-OUT	Push in	Yes	A-80
							XW2D-20G6 (2 Units)	Phillips screw	None	-
							XW2R-E20GD-T (2 Units)	Slotted screw	None	-

Unit	I/O capacity	Number of connectors	Polarity	Connection pattern*1	Number of branches	Connecting Cable	Connector-Terminal Block Conversion Unit			
							Model	Connection method	Common terminal	Connection diagram
CJ1W-OD262	64 outputs	2 MIL connectors (40p)	PNP	D	None	XW2Z-□□□K	XW2K-40G-O32C	Push in	None	A-79
							XW2K-40G-O32C-OUT-P	Push in	Yes	A-79
							XW2R-J34GD-C3	Phillips screw	None	A-80
							XW2R-E34GD-C3	Slotted screw	None	A-80
				E	2	XW2Z-□□□N	XW2K-20G-T (2 Units)	Push in	None	-
							XW2K-20G-O16C-OUT-P	Push in	Yes	A-80
							XW2D-20G6 (2 Units)	Phillips screw	None	-
							XW2R-E20GD-T (2 Units)	Slotted screw	None	-
CJ1W-OD263	64 outputs	2 MIL connectors (40p)	NPN	D	None	XW2Z-□□□K	XW2K-40G-O32C	Push in	None	A-79
							XW2K-40G-O32C-OUT	Push in	Yes	A-79
							XW2R-J34GD-C3	Phillips screw	None	A-80
							XW2R-E34GD-C3	Slotted screw	None	A-80
				E	2	XW2Z-□□□N	XW2K-20G-T (2 Units)	Push in	None	-
							XW2K-20G-O16C-OUT	Push in	Yes	A-80
							XW2D-20G6 (2 Units)	Phillips screw	None	-
							XW2R-E20GD-T (2 Units)	Slotted screw	None	-
CJ1W-MD231	16 inputs	1 Fujitsu/OTAX connector (24p)	NPN/PNP	C	None	XW2Z-□□□A	XW2K-20G-T (2 Units)	Push in	None	-
							XW2K-20G-O16A-IN (*)	Push in	Yes	-
							XW2D-20G6 (2 Units)	Phillips screw	None	-
							XW2R-E20GD-T (2 Units)	Slotted screw	None	-
							XW2R-N16GD-C1-COM (2 Units) (*)	e-CON	Yes	-
	16 outputs	1 Fujitsu/OTAX connector (24p)	NPN	C	None	XW2Z-□□□A	XW2K-20G-T (2 Units)	Push in	None	-
							XW2K-20G-O16B-OUT	Push in	Yes	-
							XW2D-20G6 (2 Units)	Phillips screw	None	-
							XW2R-E20GD-T (2 Units)	Slotted screw	None	-
CJ1W-MD232	16 inputs	1 MIL connector (20p)	NPN/PNP	C	None	XW2Z-□□□X	XW2K-20G-T (2 Units)	Push in	None	-
							XW2K-20G-O16A-IN (*)	Push in	Yes	-
							XW2D-20G6 (2 Units)	Phillips screw	None	-
							XW2R-E20GD-T (2 Units)	Slotted screw	None	-
							XW2R-N16GD-C1-COM (2 Units) (*)	e-CON	Yes	-
	16 outputs	1 MIL connector (20p)	PNP	C	None	XW2Z-□□□X	XW2K-20G-T (2 Units)	Push in	None	-
							XW2K-20G-O16B-OUT	Push in	Yes	-
							XW2D-20G6 (2 Units)	Phillips screw	None	-
							XW2R-E20GD-T (2 Units)	Slotted screw	None	-

Unit	I/O capacity	Number of connectors	Polarity	Connection pattern*1	Number of branches	Connecting Cable	Connector-Terminal Block Conversion Unit			
							Model	Connection method	Common terminal	Connection diagram
CJ1W-MD233	16 inputs	1 MIL connector (20p)	NPN/PNP	C	None	XW2Z-□□□X	XW2K-20G-T (2 Units)	Push in	None	-
							XW2K-20G-O16A-IN (*)	Push in	Yes	-
							XW2D-20G6 (2 Units)	Phillips screw	None	-
							XW2R-E20GD-T (2 Units)	Slotted screw	None	-
							XW2R-N16GD-C1-COM (2 Units) (*)	e-CON	Yes	-
	16 outputs	1 MIL connector (20p)	NPN	C	None	XW2Z-□□□X	XW2K-20G-T (2 Units)	Push in	None	-
							XW2K-20G-O16B-OUT	Push in	Yes	-
							XW2D-20G6 (2 Units)	Phillips screw	None	-
							XW2R-E20GD-T (2 Units)	Slotted screw	None	-
CJ1W-MD261	32 inputs	1 Fujitsu/ OTAX connector (40p)	NPN/PNP	D	None	XW2Z-□□□B	XW2K-40G-O32A	Push in	None	A-75
							XW2K-40G-O32A-IN (*)	Push in	Yes	A-75
							XW2R-J34GD-C1	Phillips screw	None	A-76
							XW2R-E34GD-C1	Slotted screw	None	A-76
							XW2R-N32GD-C1-COM (*)	e-CON	Yes	-
				E	2	XW2Z-□□□D	XW2K-20G-T (2 Units)	Push in	None	-
							XW2K-20G-O16A-IN (*)	Push in	Yes	A-76
							XW2D-20G6 (2 Units)	Phillips screw	None	-
							XW2R-E20GD-T (2 Units)	Slotted screw	None	-
							XW2R-N16GD-C1-COM (2 Units) (*)	e-CON	Yes	-
	32 outputs	1 Fujitsu/ OTAX connector (40p)	NPN	D	None	XW2Z-□□□B	XW2K-40G-O32B	Push in	None	A-79
							XW2K-40G-O32B-OUT	Push in	Yes	A-79
							XW2R-J34GD-C3	Phillips screw	None	A-80
							XW2R-E34GD-C3	Slotted screw	None	A-80
				E	2	XW2Z-□□□D	XW2K-20G-T (2 Units)	Push in	None	-
							XW2K-20G-O16B-OUT	Push in	Yes	A-80
							XW2D-20G6 (2 Units)	Phillips screw	None	-
							XW2R-E20GD-T (2 Units)	Slotted screw	None	-

Unit	I/O capacity	Number of connectors	Polarity	Connection pattern*1	Number of branches	Connecting Cable	Connector-Terminal Block Conversion Unit			
							Model	Connection method	Common terminal	Connection diagram
CJ1W-MD263	32 inputs	2 MIL connectors (40p)	NPN/PNP	D	None	XW2Z-□□□K	XW2K-40G-O32C	Push in	None	A-77
							XW2K-40G-O32C-IN (*)	Push in	Yes	A-77
							XW2R-J34GD-C1	Phillips screw	None	A-78
							XW2R-E34GD-C1	Slotted screw	None	A-78
							XW2R-N32GD-C1-COM (*)	e-CON	Yes	-
				E	2	XW2Z-□□□N	XW2K-20G-T (2 Units)	Push in	None	-
							XW2K-20G-O16C-IN (*)	Push in	Yes	A-78
							XW2D-20G6 (2 Units)	Phillips screw	None	-
							XW2R-E20GD-T (2 Units)	Slotted screw	None	-
							XW2R-N16GD-C1-COM (2 Units) (*)	e-CON	Yes	-
	32 outputs	2 MIL connectors (40p)	NPN	D	None	XW2Z-□□□K	XW2K-40G-O32C	Push in	None	A-79
							XW2K-40G-O32C-OUT	Push in	Yes	A-79
							XW2R-J34GD-C3	Phillips screw	None	A-80
							XW2R-E34GD-C3	Slotted screw	None	A-80
				E	2	XW2Z-□□□N	XW2K-20G-T (2 Units)	Push in	None	-
							XW2K-20G-O16C-OUT	Push in	Yes	A-80
							XW2D-20G6 (2 Units)	Phillips screw	None	-
							XW2R-E20GD-T (2 Units)	Slotted screw	None	-
CJ1W-MD563	32 inputs	2 MIL connectors (40p)	NPN/PNP	D	None	XW2Z-□□□K	XW2K-40G-O32C	Push in	None	A-77
							XW2K-40G-O32C-IN (*)	Push in	Yes	-
							XW2R-J34GD-C1	Phillips screw	None	A-78
							XW2R-E34GD-C1	Slotted screw	None	A-78
							XW2R-N32GD-C1-COM (*)	e-CON	Yes	-
				E	2	XW2Z-□□□N	XW2K-20G-T (2 Units)	Push in	None	-
							XW2K-20G-O16C-IN (*)	Push in	Yes	-
							XW2D-20G6 (2 Units)	Phillips screw screw	None	-
							XW2R-E20GD-T (2 Units)	Slotted screw	None	-
							XW2R-N16GD-C1-COM (2 Units) (*)	e-CON	Yes	-
	32 outputs	2 MIL connectors (40p)	NPN	D	None	XW2Z-□□□K	XW2K-40G-O32B	Push in	None	A-79
							XW2K-40G-O32B-OUT	Push in	Yes	A-79
							XW2R-J34GD-C3	Phillips screw	None	A-80
							XW2R-E34GD-C3	Slotted screw	None	A-80
				E	2	XW2Z-□□□N	XW2K-20G-T (2 Units)	Push in	None	-
							XW2K-20G-O16C-OUT	Push in	Yes	A-80
							XW2D-20G6 (2 Units)	Phillips screw	None	-
							XW2R-E20GD-T (2 Units)	Slotted screw	None	-

Note The inputs are NPN. For PNP inputs, reverse the polarity of the external power supply connections to the power supply terminals on the Connector-Terminal Block Conversion Unit.

● Connecting Cables

XW2Z-□□□

Length	XW2Z-□□A	XW2Z-□□B	XW2Z-□□X	XW2Z-□□K	XW2Z-□□N	XW2Z-□□D
0.25 m	---	---	---	XW2Z-C25K	---	---
0.5 m	XW2Z-050A	XW2Z-050B	XW2Z-C50X	XW2Z-C50K	---	---
0.75 m	---	---	---	---	XW2Z-100N	XW2Z-100D
1.0 m	XW2Z-100A	XW2Z-100B	XW2Z-100X	XW2Z-100K		
1.25 m	---	---	---	---	XW2Z-150N	XW2Z-150D
1.5 m	XW2Z-150A	XW2Z-150B	XW2Z-150K	---		
1.75 m	---	---	---	---	XW2Z-200N	XW2Z-200D
2.0 m	XW2Z-200A	XW2Z-200B	XW2Z-200X	XW2Z-200K		
2.75 m	---	---	---	---	XW2Z-300N	XW2Z-300D
3.0 m	XW2Z-300A	XW2Z-300B	XW2Z-300X	XW2Z-300K		
4.75 m	---	---	---	---	XW2Z-500N	XW2Z-500D
5.0 m	XW2Z-500A	XW2Z-500B	XW2Z-500X	XW2Z-500K		
9.75 m	---	---	---	---	XW2Z-010N	XW2Z-010D
10.0 m	XW2Z-010A	XW2Z-010B	XW2Z-010X	---		
14.75 m	---	---	---	---	XW2Z-15MN	XW2Z-15MD
15.0 m	XW2Z-15MA	XW2Z-15MB	---	---		
19.75 m	---	---	---	---	XW2Z-20MN	XW2Z-20MD
20.0 m	XW2Z-20MA	XW2Z-20MB	---	---		

● Connections to I/O Relay Terminals

Unit	I/O capacity	Number of connectors	Polarity	Connection pattern	Connecting Cable	I/O Relay Terminal		
						Model	Connection method	Common terminal
CJ1W-ID231	32 inputs	1 Fujitsu/OTAX connector (40p)	NPN	A	XW2Z-RI□□□C-□□	G7TC-ID16	Phillips screw	None
					XW2Z-RI□□□C-□□	G7TC-IA 16	Phillips screw	None
					XW2Z-RI□□□C-□□	G70V-SID16P	Push in	None
					XW2Z-RI□□□C-□□	G70V-SID16P-C16	Push in	Yes
			PNP		XW2Z-RI□□□C-□□	G70V-SID16P-1	Push in	None
					XW2Z-RI□□□C-□□	G70V-SID16P-1-C16	Push in	Yes
CJ1W-ID232 CJ1W-ID233	32 inputs	1 MIL connector (40p)	NPN	A	XW2Z-RO□□□-□□-D1	G7TC-ID16	Phillips screw	None
					XW2Z-RO□□□-□□-D1	G7TC-IA 16	Phillips screw	None
					XW2Z-RO□□□-□□-D1	G70V-SID16P	Push in	None
					XW2Z-RO□□□-□□-D1	G70V-SID16P-C16	Push in	Yes
			PNP		XW2Z-RO□□□-□□-D1	G70V-SID16P-1	Push in	None
					XW2Z-RO□□□-□□-D1	G70V-SID16P-1-C16	Push in	Yes
CJ1W-ID261	64 inputs	2 Fujitsu/OTAX connectors (40p)	NPN	B	XW2Z-RI□□□C-□□	G7TC-ID16	Phillips screw	None
					XW2Z-RI□□□C-□□	G7TC-IA 16	Phillips screw	None
					XW2Z-RI□□□C-□□	G70V-SID16P	Push in	None
					XW2Z-RI□□□C-□□	G70V-SID16P-C16	Push in	Yes
			PNP		XW2Z-RI□□□C-□□	G70V-SID16P-1	Push in	None
					XW2Z-RI□□□C-□□	G70V-SID16P-1-C16	Push in	Yes
CJ1W-ID262	64 inputs	2 MIL connectors (40p)	NPN	B	XW2Z-RO□□□-□□-D1	G7TC-ID16	Phillips screw	None
					XW2Z-RO□□□-□□-D1	G7TC-IA 16	Phillips screw	None
					XW2Z-RO□□□-□□-D1	G70V-SID16P	Push in	None
					XW2Z-RO□□□-□□-D1	G70V-SID16P-C16	Push in	Yes
			PNP		XW2Z-RO□□□-□□-D1	G70V-SID16P-1	Push in	None
					XW2Z-RO□□□-□□-D1	G70V-SID16P-1-C16	Push in	Yes
CJ1W-OD231	32 outputs	1 Fujitsu/OTAX connector (40p)	NPN	A	XW2Z-RO□□□C-□□	G7TC-OC16	Phillips screw	None
					XW2Z-RO□□□C-□□	G70D-SOC16	Phillips screw	None
					XW2Z-RO□□□C-□□	G70D-FOM16	Phillips screw	None
					XW2Z-RO□□□C-□□	G70D-VSOC16	Phillips screw	None
					XW2Z-RO□□□C-□□	G70D-VFOM16	Phillips screw	None
					XW2Z-RO□□□C-□□	G70A-ZOC16-3	Phillips screw	None
					XW2Z-RO□□□C-□□	G70V-SOC16P	Push in	None
					XW2Z-RO□□□C-□□	G70V-SOC16P-C4	Push in	Yes
CJ1W-OD232	32 outputs	1 MIL connector (40p)	PNP	A	XW2Z-RI□□□-□□-D1	G7TC-OC16-1	Phillips screw	None
					XW2Z-RO□□□-□□-D1	G70A-ZOC16-4	Phillips screw	None
					XW2Z-RO□□□-□□-D1	G70D-SOC16-1	Phillips screw	None

Unit	I/O capacity	Number of connectors	Polarity	Connection pattern	Connecting Cable	I/O Relay Terminal		
						Model	Connection method	Common terminal
CJ1W-OD233 CJ1W-OD234	32 outputs	1 MIL connector (40p)	NPN	A	XW2Z-RO□□□-□□-D1	G7TC-OC16	Phillips screw	None
					XW2Z-RO□□□-□□-D1	G70D-SOC16	Phillips screw	None
					XW2Z-RO□□□-□□-D1	G70D-FOM16	Phillips screw	None
					XW2Z-RO□□□-□□-D1	G70D-VSOC16	Phillips screw	None
					XW2Z-RO□□□-□□-D1	G70D-VFOM16	Phillips screw	None
					XW2Z-RO□□□-□□-D1	G70A-ZOC16-3	Phillips screw	None
					XW2Z-RO□□□-□□-D1	G70V-SOC16P	Push in	None
					XW2Z-RO□□□-□□-D1	G70V-SOC16P-C4	Push in	Yes
CJ1W-OD261	64 outputs	2 Fujitsu/OTAX connectors (40p)	NPN	B	XW2Z-RO□□□C-□□	G7TC-OC16	Phillips screw	None
					XW2Z-RO□□□C-□□	G70D-SOC16	Phillips screw	None
					XW2Z-RO□□□C-□□	G70D-FOM16	Phillips screw	None
					XW2Z-RO□□□C-□□	G70D-VSOC16	Phillips screw	None
					XW2Z-RO□□□C-□□	G70D-VFOM16	Phillips screw	None
					XW2Z-RO□□□C-□□	G70A-ZOC16-3	Phillips screw	None
					XW2Z-RO□□□C-□□	G70V-SOC16P	Push in	None
					XW2Z-RO□□□C-□□	G70V-SOC16P-C4	Push in	Yes
CJ1W-OD262	64 outputs	1 MIL connector (40p)	PNP	B	XW2Z-RI□□□-□□-D1	G7TC-OC16-1	Phillips screw	None
					XW2Z-RO□□□-□□-D1	G70D-SOC16-1	Phillips screw	None
					XW2Z-RO□□□-□□-D1	G70A-ZOC16-4	Phillips screw	None
					XW2Z-RO□□□-□□-D1	G70V-SOC16P-1	Push in	None
					XW2Z-RO□□□-□□-D1	G70V-SOC16P-1-C4	Push in	Yes
CJ1W-OD263	64 outputs	1 MIL connector (40p)	NPN	B	XW2Z-RO□□□-□□-D1	G7TC-OC16	Phillips screw	None
					XW2Z-RO□□□-□□-D1	G70D-SOC16	Phillips screw	None
					XW2Z-RO□□□-□□-D1	G70D-FOM16	Phillips screw	None
					XW2Z-RO□□□-□□-D1	G70D-VSOC16	Phillips screw	None
					XW2Z-RO□□□-□□-D1	G70D-VFOM16	Phillips screw	None
					XW2Z-RO□□□-□□-D1	G70A-ZOC16-3	Phillips screw	None
					XW2Z-RO□□□-□□-D1	G70V-SOC16P	Push in	None
					XW2Z-RO□□□-□□-D1	G70V-SOC16P-C4	Push in	Yes
CJ1W-MD231	16 inputs	1 Fujitsu/OTAX connector (24p)	NPN/ PNP	C	XW2Z-R□□□C	G7TC-IA 16	Phillips screw	None
					XW2Z-R□□□C	G7TC-ID16	Phillips screw	None
					XW2Z-R□□□C	G70V-SID16P	Push in	None
					XW2Z-R□□□C	G70V-SID16P-1	Push in	None
					XW2Z-R□□□C	G70V-SID16P-C16	Push in	Yes
					XW2Z-R□□□C	G70V-ZID16P-1-C16	Push in	Yes
	16 outputs	1 Fujitsu/OTAX connector (24p)	NPN		XW2Z-R□□□C	G7TC-OC16	Phillips screw	None
					XW2Z-R□□□C	G70A-ZOC16-3	Phillips screw	None
					XW2Z-R□□□C	G70V-SOC16P	Push in	None
					XW2Z-R□□□C	G70V-SOC16P-C4	Push in	Yes

Unit	I/O capacity	Number of connectors	Polarity	Connection pattern	Connecting Cable	I/O Relay Terminal		
						Model	Connection method	Common terminal
CJ1W-MD232	16 inputs	1 MIL connector (20p)	NPN/ PNP	C	XW2Z-RO□□C	G7TC-IA 16	Phillips screw	None
					XW2Z-RO□□C	G7TC-ID16	Phillips screw	None
					XW2Z-RO□□C	G70V-SID16P	Push in	None
					XW2Z-RO□□C	G70V-SID16P-1	Push in	None
					XW2Z-RO□□C	G70V-SID16P-C16	Push in	Yes
					XW2Z-RO□□C	G70V-SID16P-1-C16	Push in	Yes
	16 outputs	1 MIL connector (20p)	PNP		XW2Z-RO□□C	G7TC-OC16-1	Phillips screw	None
					XW2Z-RI□□□C	G70A-ZOC16-4	Phillips screw	None
					XW2Z-RI□□□C	G70V-SOC16P-1	Push in	None
					XW2Z-RI□□□C	G70V-SOC16P-1-C4	Push in	Yes
CJ1W-MD233	16 inputs	1 MIL connector (20p)	NPN/ PNP	C	XW2Z-RO□□C	G7TC-IA 16	Phillips screw	None
					XW2Z-RO□□C	G7TC-ID16	Phillips screw	None
					XW2Z-RO□□C	G70V-SID16P	Push in	None
					XW2Z-RO□□C	G70V-SID16P-1	Push in	None
					XW2Z-RO□□C	G70V-SID16P-C16	Push in	Yes
					XW2Z-RO□□C	G70V-SID16P-1-C16	Push in	Yes
	16 outputs	Connector	NPN		XW2Z-RO□□C	G7TC-OC16	Phillips screw	None
					XW2Z-RO□□C	G70A-ZOC16-3	Phillips screw	None
					XW2Z-RO□□C	G70V-SOC16P	Push in	None
					XW2Z-RO□□C	G70V-SOC16P-C4	Push in	Yes
CJ1W-MD261	32 inputs	1 Fujitsu/OTAX connector (40p)	NPN/ PNP	B	XW2Z-RI□□□C-□□	G7TC-IA 16	Phillips screw	None
					XW2Z-RI□□□C-□□	G7TC-ID16	Phillips screw	None
					XW2Z-RI□□□C-□□	G70V-SID16P	Push in	None
					XW2Z-RI□□□C-□□	G70V-SID16P-1	Push in	None
					XW2Z-RI□□□C-□□	G70V-SID16P-C16	Push in	Yes
					XW2Z-RI□□□C-□□	G70V-SID16P-1-C16	Push in	Yes
	32 outputs	1 Fujitsu/OTAX connector (40p)	NPN		XW2Z-RO□□□C-□□	G7TC-OC16	Phillips screw	None
					XW2Z-RO□□□C-□□	G70A-ZOC16-3	Phillips screw	None
					XW2Z-RO□□□C-□□	G70V-SOC16P	Push in	None
					XW2Z-RO□□□C-□□	G70V-SOC16P-C4	Push in	Yes
CJ1W-MD263	32 inputs	1 MIL connector (40p)	NPN/ PNP	B	XW2Z-RO□□□-□□-D1	G7TC-IA 16	Phillips screw	None
					XW2Z-RO□□□-□□-D1	G7TC-ID16	Phillips screw	None
					XW2Z-RO□□□-□□-D1	G70V-SID16P	Push in	None
					XW2Z-RO□□□-□□-D1	G70V-SID16P-1	Push in	None
					XW2Z-RO□□□-□□-D1	G70V-SID16P-C16	Push in	Yes
					XW2Z-RO□□□-□□-D1	G70V-SID16P-1-C16	Push in	Yes
	32 outputs	1 MIL connector (40p)	NPN		XW2Z-RO□□□-□□-D1	G7TC-OC16	Phillips screw	None
					XW2Z-RO□□□-□□-D1	G70A-ZOC16-4	Phillips screw	None
					XW2Z-RO□□□-□□-D1	G70V-SOC16P	Push in	None
					XW2Z-RO□□□-□□-D1	G70V-SOC16P-C4	Push in	Yes

*1 For Units with both inputs and outputs, refer to the connection patterns for both input and output connections.

Connector-Terminal Block Conversion Unit Connection Diagrams

The applicable terminals on the Connector-Terminal Block Conversion Unit and external connection diagrams are provided below for Basic I/O Unit connections to Connector-Terminal Block Conversion Units.

● Inputs

Programmable Controller I/O Unit	CJ1W-ID231/261 CJ1W-MD261
Connector-Terminal Block Conversion Unit	XW2K-40G-O32A
Connecting Cables	XW2Z-□□□B
Connection diagram	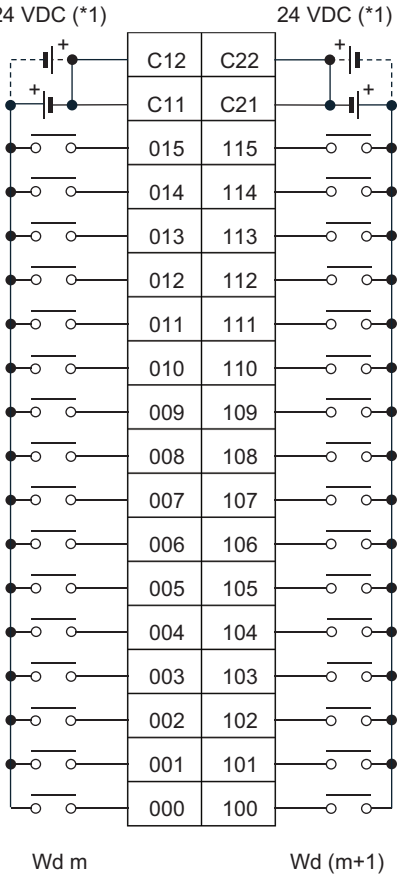

Note The polarity for input power supply connections indicated with dotted lines (- - - - -) can be connected in either direction provided that the same polarity is used for the commons for rows A and B.

Programmable Controller I/O Unit	CJ1W-ID231/261 CJ1W-MD261
Connector-Terminal Block Conversion Unit	XW2K-40G-O32A-IN
Connecting Cables	XW2Z-□□□B
Connection diagram	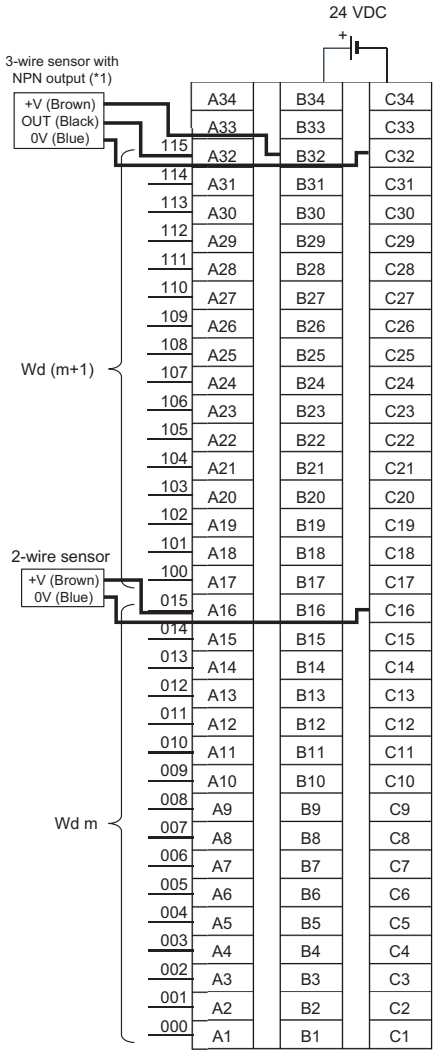

Note This terminal block is an NPN-compatible product in which the positive terminal and the common terminal are connected. When using in PNP applications, reverse the polarity of the external power supply and the I/O devices.

Programmable Controller I/O Unit	CJ1W-ID231/261 CJ1W-MD261
Connector-Terminal Block Conversion Unit	XW2K-20G-O16A-IN
Connecting Cables	XW2Z-□□□D
Connection diagram	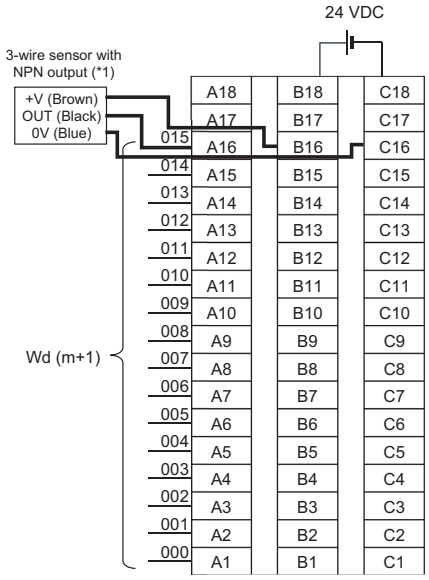 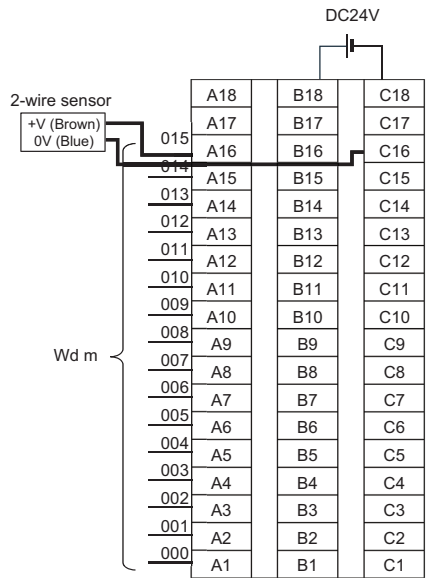

Note This terminal block is an NPN-compatible product in which the positive terminal and the common terminal are connected. When using in PNP applications, reverse the polarity of the external power supply and the I/O devices.

Programmable Controller I/O Unit	CJ1W-ID231/261 CJ1W-MD261
Connector-Terminal Block Conversion Unit	XW2R-J34GD-C1 XW2R-E34GD-C1
Connecting Cables	XW2Z-□□□B
Connection diagram	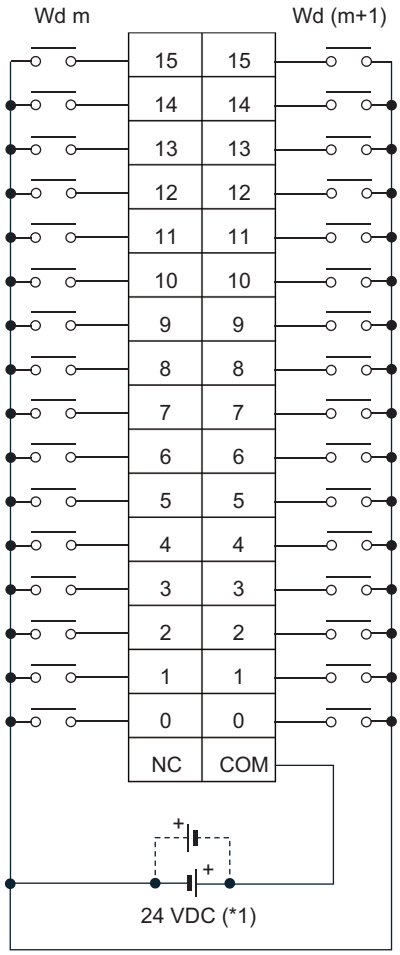

Note The polarity for input power supply connections indicated with dotted lines (- - - - -) can be connected in either direction provided that the same polarity is used for the commons.

Programmable Controller I/O Unit	CJ1W-ID232/233/262 CJ1W-MD263/563
Connector-Terminal Block Conversion Unit	XW2K-40G-O32C
Connecting Cables	XW2Z-□□□K
Connection diagram	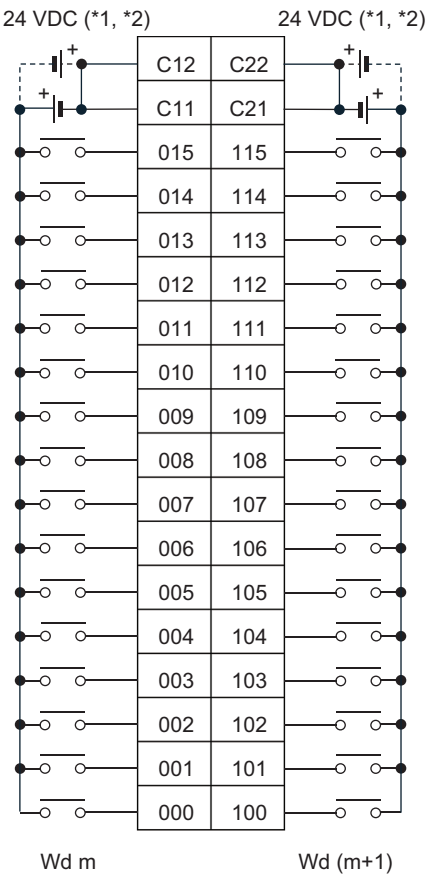

Note 1 The power supply voltage for the CJ1W-MD563 is 5 V.

2 The polarity for input power supply connections indicated with dotted lines (- - - - -) can be connected in either direction provided that the same polarity is used for the commons.

Programmable Controller I/O Unit	CJ1W-ID232/233/262 CJ1W-MD263
Connector-Terminal Block Conversion Unit	XW2K-40G-O32C-IN
Connecting Cables	XW2Z-□□□K
Connection diagram	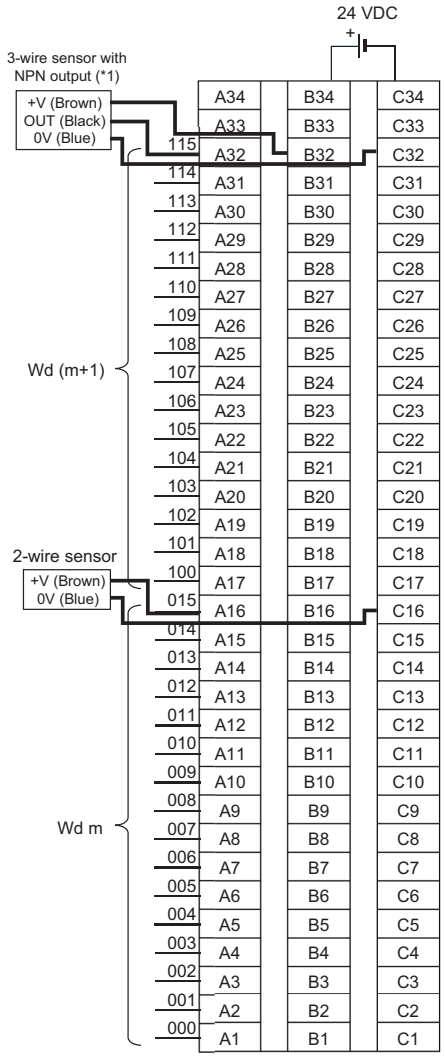

Note This terminal block is an NPN-compatible product in which the positive terminal and the common terminal are connected. When using in PNP applications, reverse the polarity of the external power supply and the I/O devices.

Programmable Controller I/O Unit	CJ1W-ID232/233/262 CJ1W-MD263
Connector-Terminal Block Conversion Unit	XW2K-20G-O16C-IN
Connecting Cables	XW2Z-□□□N
Connection diagram	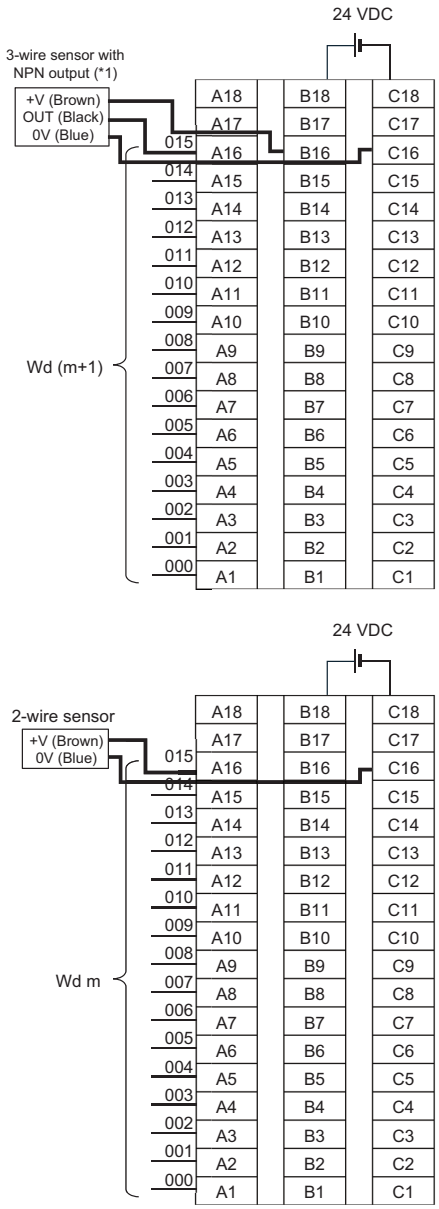

Note This terminal block is an NPN-compatible product in which the positive terminal and the common terminal are connected. When using in PNP applications, reverse the polarity of the external power supply and the I/O devices.

Programmable Controller I/O Unit	CJ1W-ID232/233/262 CJ1W-MD263/563
Connector-Terminal Block Conversion Unit	XW2R-J34GD-C2 XW2R-E34GD-C2
Connecting Cables	XW2Z-□□□K
Connection diagram	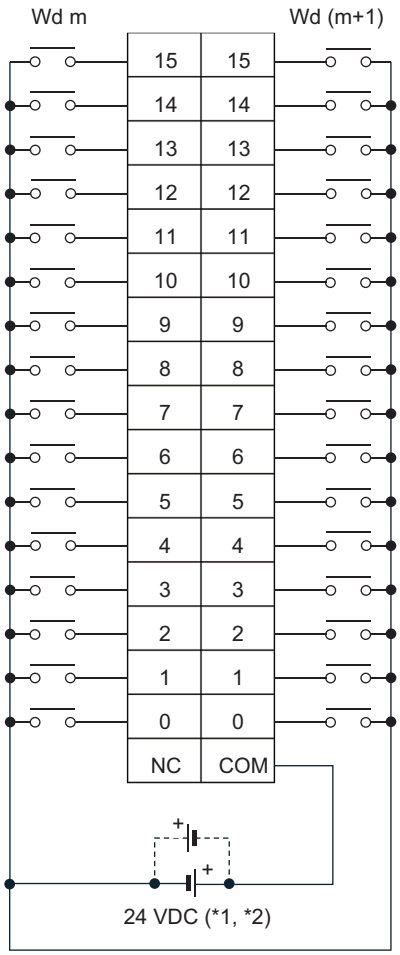

Note 1 The power supply voltage for the CJ1W-MD563 is 5 V.

2 The polarity for input power supply connections indicated with dotted lines (- - - - -) can be connected in either direction provided that the same polarity is used for the commons for rows A and B.

● Outputs

Programmable Controller I/O Unit	CJ1W-OD231/233/234/261/263 CJ1W-MD261/263/563
Connector-Terminal Block Conversion Unit	For CJ1W-OD231/261, MD261 XW2K-20G-O32B For CJ1W-OD233/234/263, MD263/563 XW2K-40G-O32C
Connecting Cables	For CJ1W-OD231/261, MD261 XW2Z-□□□B For CJ1W-OD233/234/263, MD263/563 XW2Z-□□□K
Connection diagram	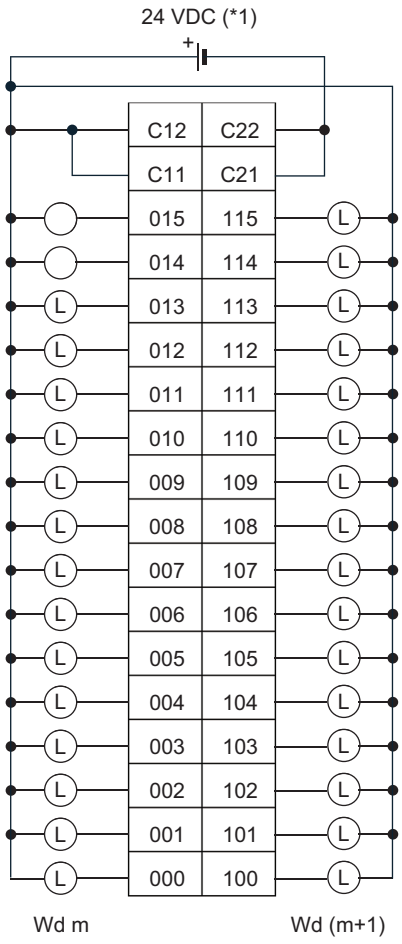

Note The power supply voltage for the CJ1W-MD563 is 5 V.

Programmable Controller I/O Unit	CJ1W-OD231/233/234/261/263 CJ1W-MD261/263/563
Connector-Terminal Block Conversion Unit	For CJ1W-OD231/261, MD261 XW2K-40G-O32B-OUT For CJ1W-OD233/234/263, MD263/563 XW2K-40G-O32C-OUT
Connecting Cables	For CJ1W-OD231/261, MD261 XW2Z-□□□B For CJ1W-OD233/234/263, MD263/563 XW2Z-□□□K
Connection diagram	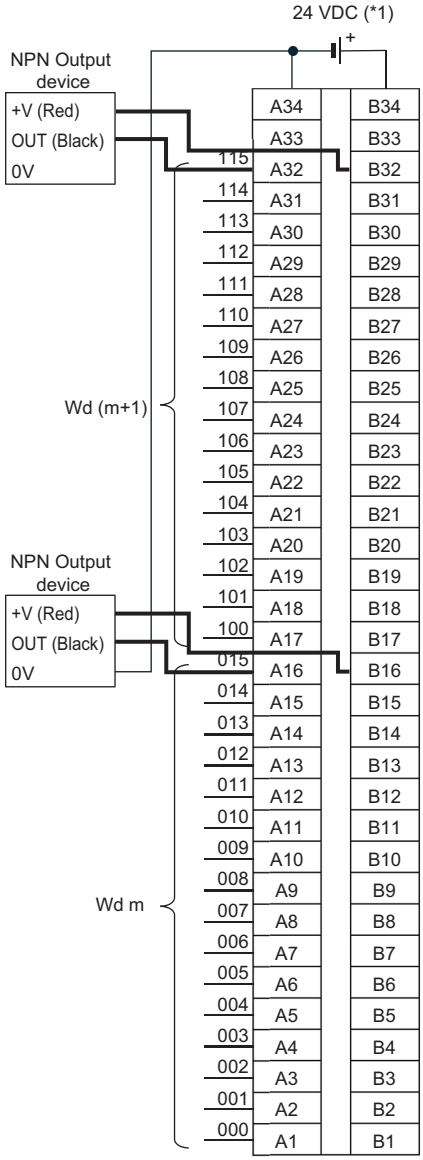

Note The power supply voltage for the CJ1W-MD563 is 5 V.

Programmable Controller I/O Unit	CJ1W-OD231/233/234/261/263 CJ1W-MD261/263/563
Connector-Terminal Block Conversion Unit	For CJ1W-OD231/261, MD261 XW2K-20G-O16B-OUT For CJ1W-OD233/234/263, MD263/563 XW2K-20G-O16C-OUT
Connecting Cables	For CJ1W-OD231/261, MD261 XW2Z-□□□D For CJ1W-OD233/234/263, MD263/563 XW2Z-□□□N
Connection diagram	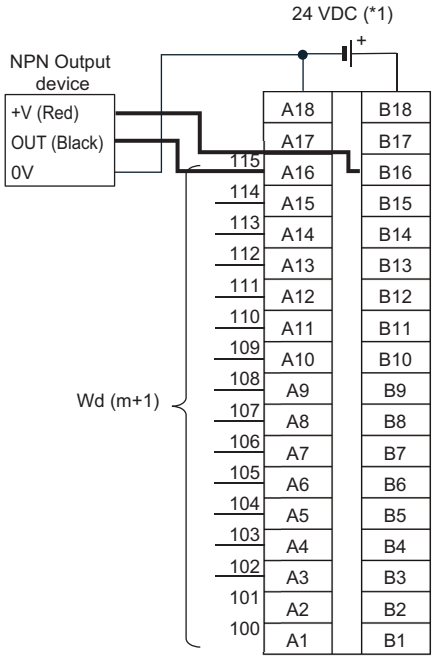 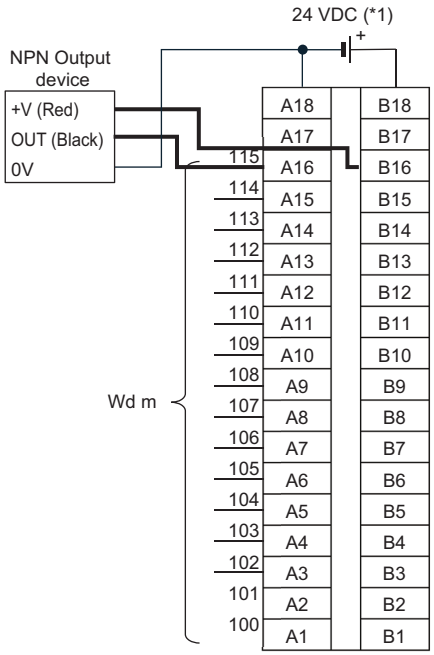

Note The power supply voltage for the CJ1W-MD563 is 5 V.

Programmable Controller I/O Unit	CJ1W-OD231/233/234/261/263 CJ1W-MD261/263/563
Connector-Terminal Block Conversion Unit	For CJ1W-OD231/261, MD261 XW2R-J34GD-C3 XW2R-E34GD-C3 For CJ1W-OD233/234/263, MD263/563 XW2R-J34GD-C4 XW2R-E34GD-C4
Connecting Cables	For CJ1W-OD231/261, MD261 XW2Z-□□□B For CJ1W-OD233/234/263, MD263/563 XW2Z-□□□K
Connection diagram	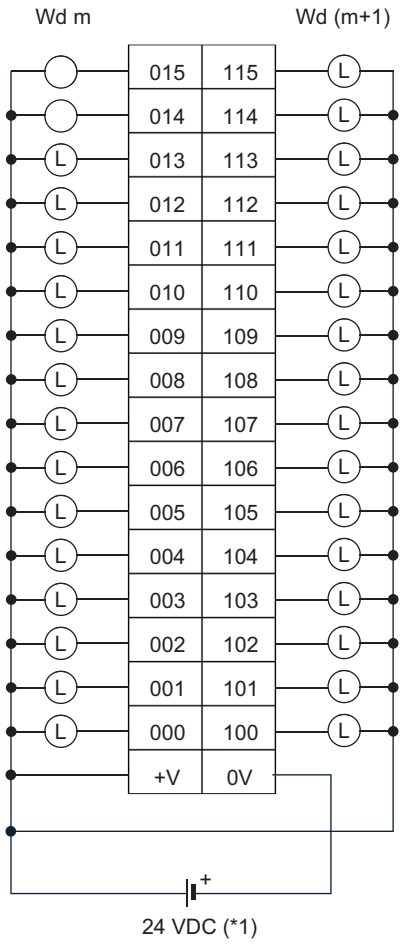

Note The power supply voltage for the CJ1W-MD563 is 5 V.

Programmable Controller I/O Unit	CJ1W-OD232/262
Connector-Terminal Block Conversion Unit	XW2K-40G-O32C
Connecting Cables	XW2Z-□□□K
Connection diagram	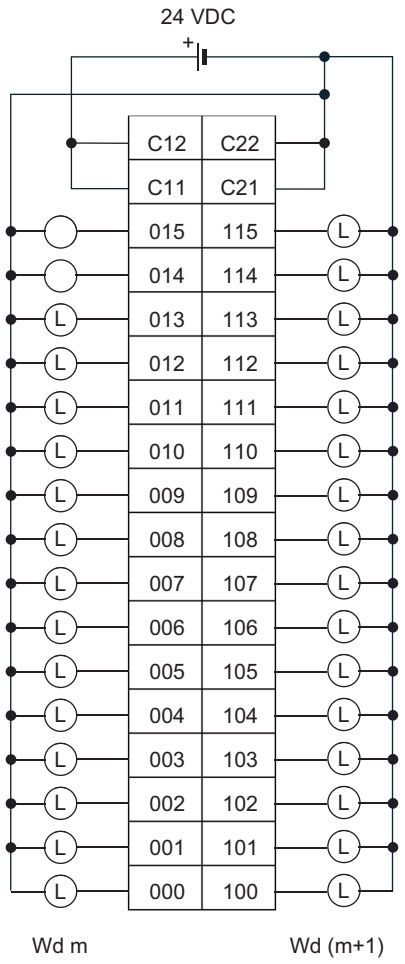

Programmable Controller I/O Unit	CJ1W-OD232/262
Connector-Terminal Block Conversion Unit	XW2K-40G-O32C-OUT
Connecting Cables	XW2Z-□□□K
Connection diagram	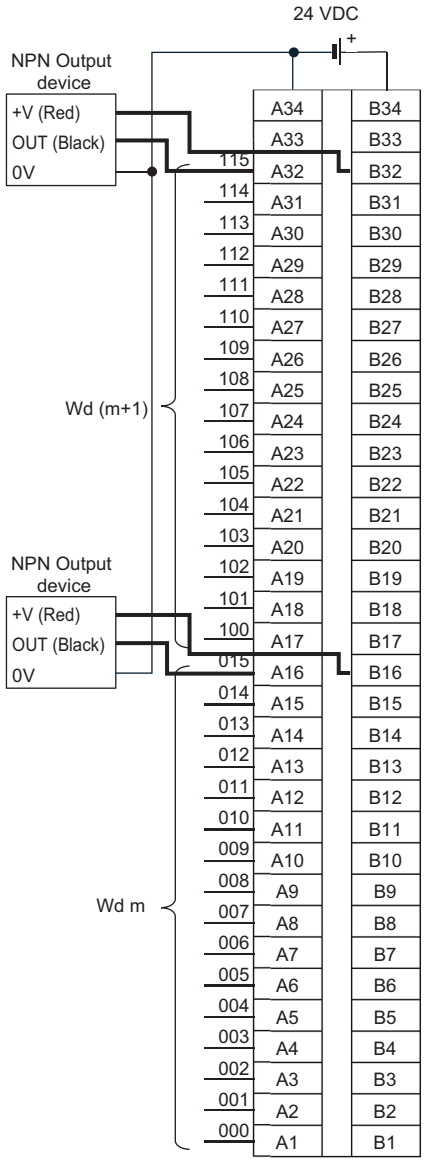

Programmable Controller I/O Unit	CJ1W-OD232/262
Connector-Terminal Block Conversion Unit	XW2K-20G-O32C-OUT
Connecting Cables	XW2Z-□□□K
Connection diagram	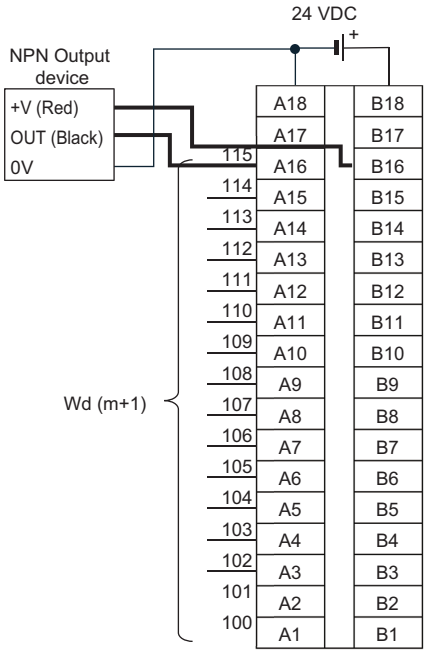 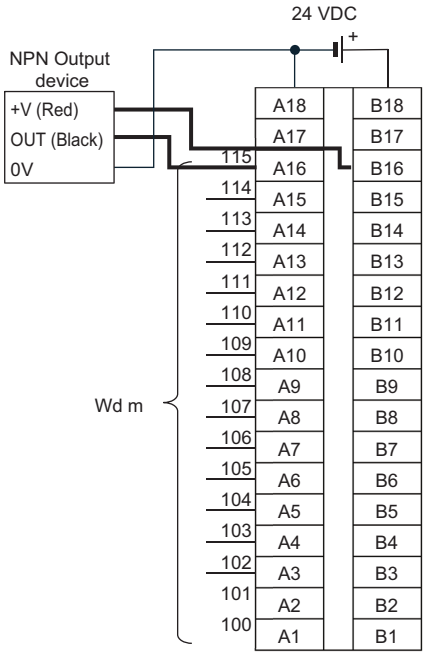

Programmable Controller I/O Unit	CJ1W-OD232/262
Connector-Terminal Block Conversion Unit	XW2R-J34GD-C4 XW2R-E34GD-C4
Connecting Cables	XW2Z-□□□K
Connection diagram	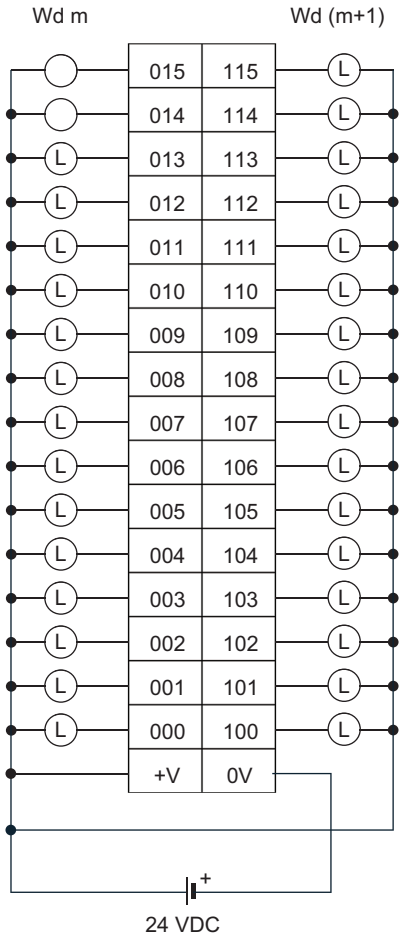

A-2 Dimensions

A-2-1 CJ3M CPU Units

CJ3M-CPU3□

Unit: mm

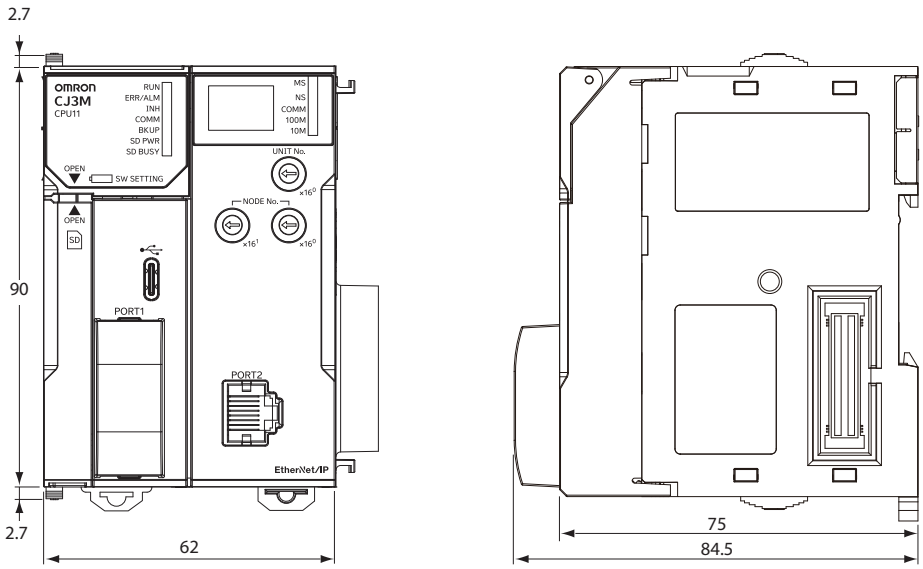

CJ3M-CPU1□

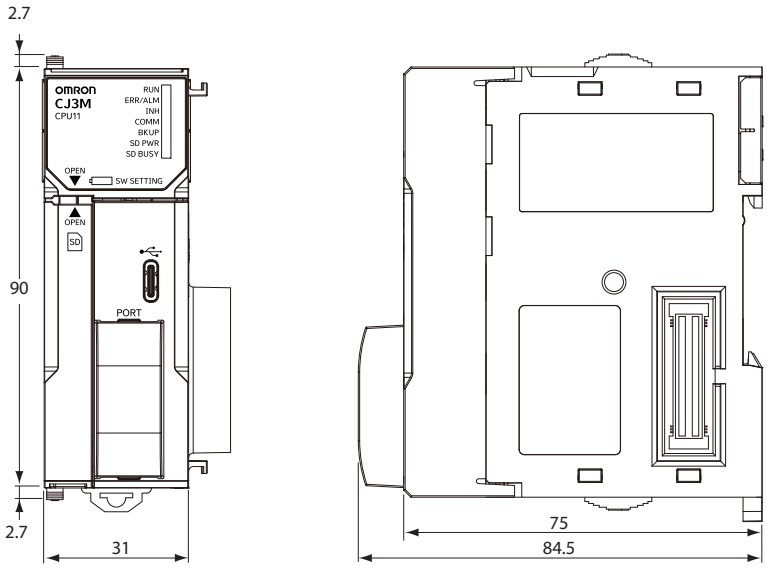

A-2-2 Power Supply Units

CJ1W-PA205R

Unit: mm

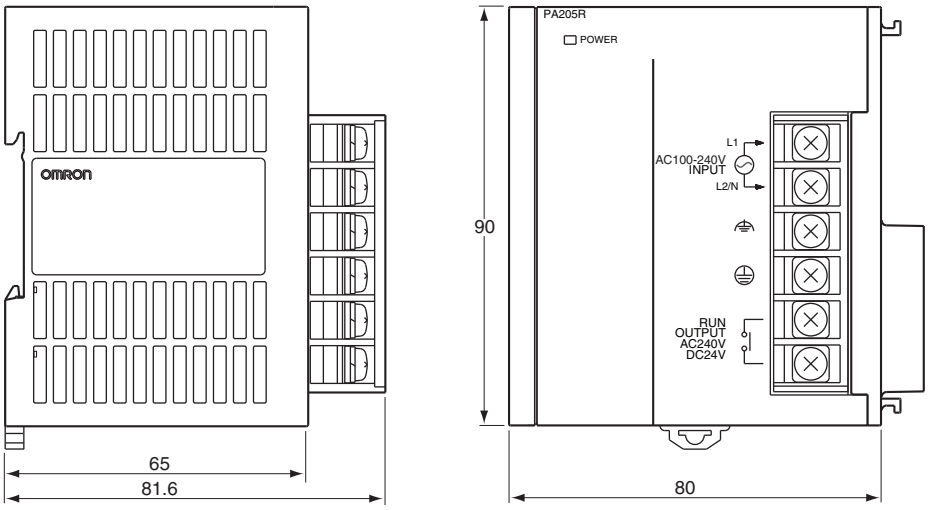

CJ1W-PA205C

Unit: mm

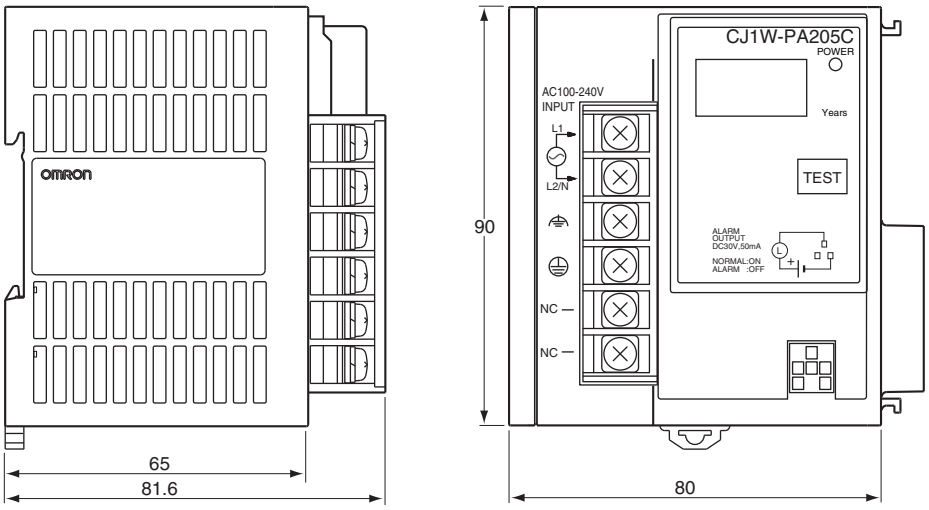

CJ1W-PA202

Unit: mm

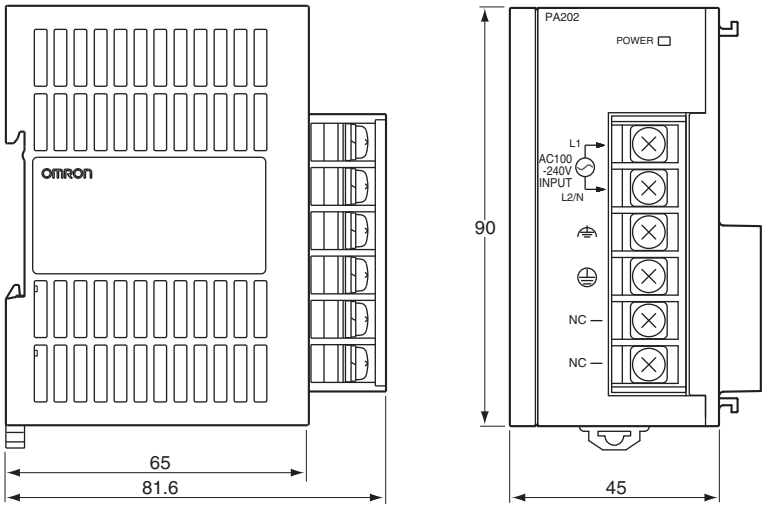

CJ1W-PD025

Unit: mm

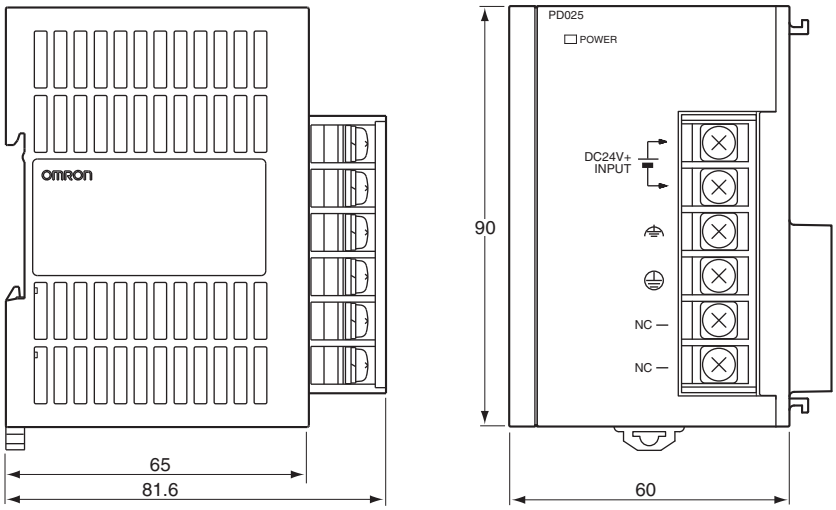

CJ1W-PD022

Unit: mm

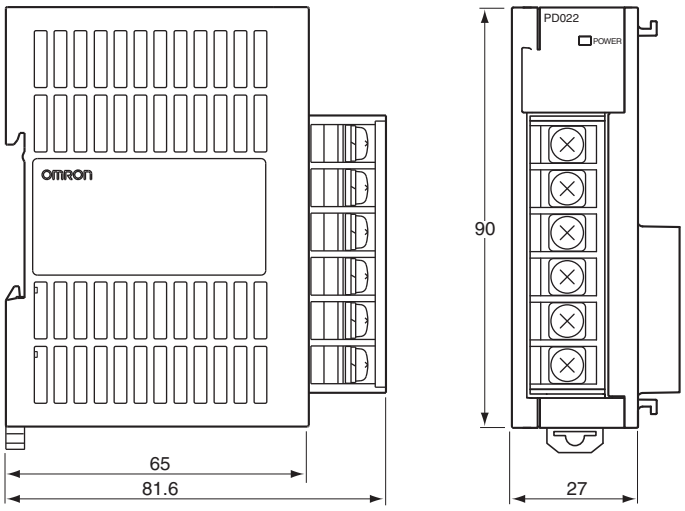

A-2-3 Basic I/O Units

8/16-point Units with 18-terminal Terminal Blocks

Unit: mm

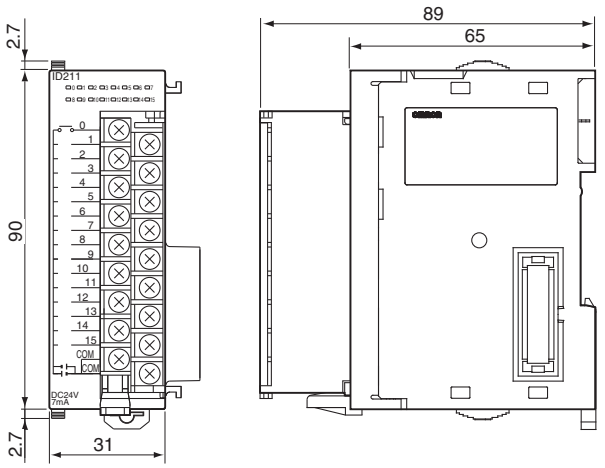

32-point Units (Input Units and Output Units)

Unit: mm

Units with Fujitsu/OTAX Connector (40-pin × 1)

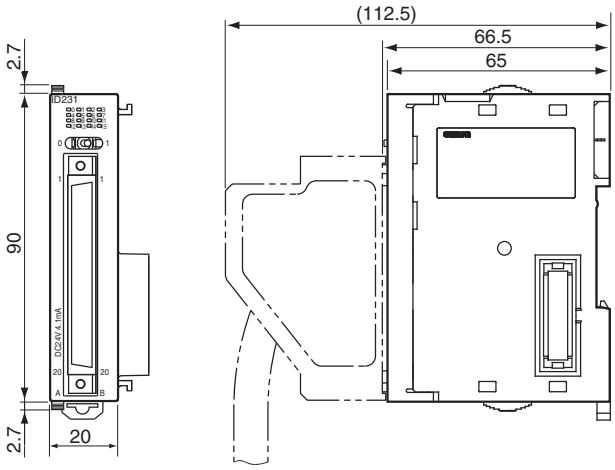

Units with MIL Connector (40-pin × 1)

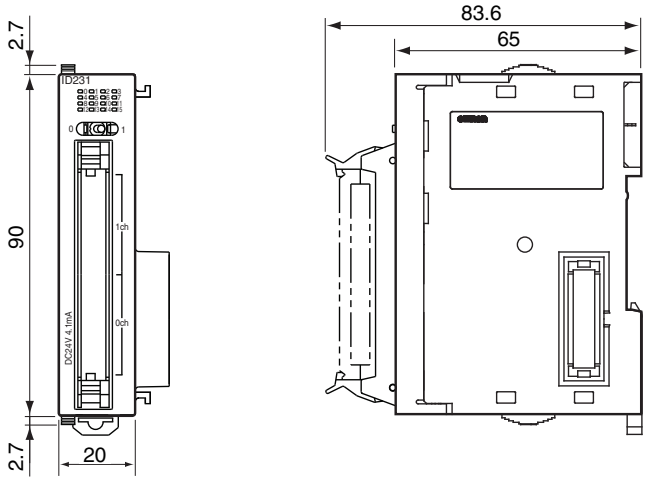

32-point Units (24-VDC Input/Transistor Output Units)

Units with Fujitsu/OTAX Connector (24-pin × 2)

Unit: mm

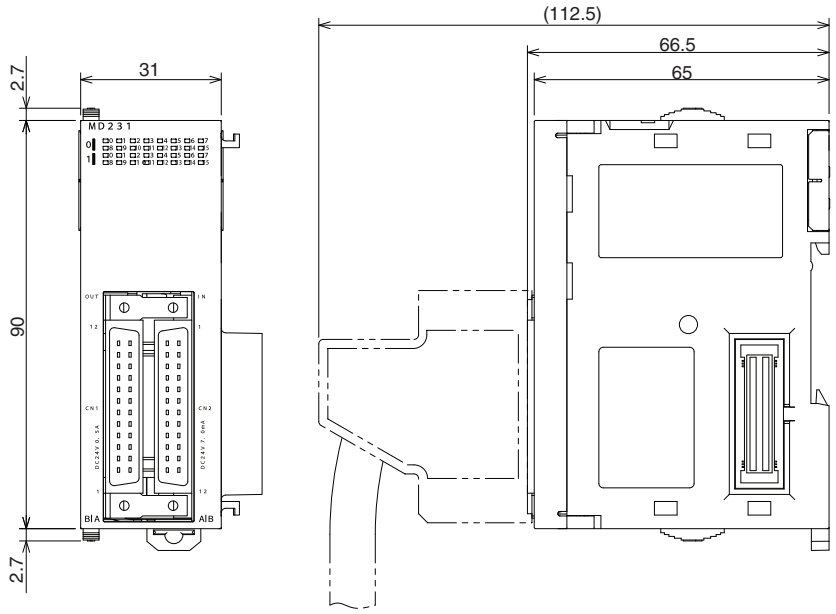

Units with MIL Connector (20-pin × 2)

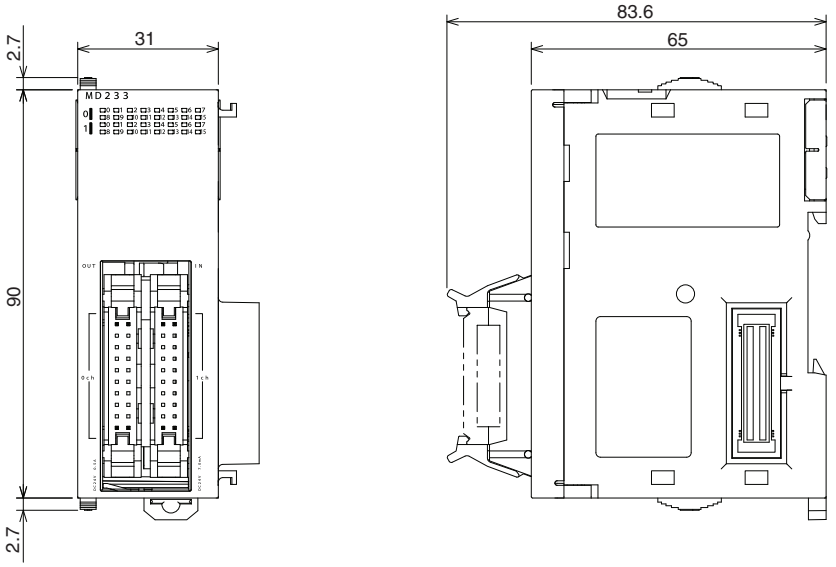

64-point Units (Input Units, Output Units, 24-VDC Input/Transistor Output Units, TTL I/O Units)

Units with Fujitsu/OTAX Connector (40-pin × 2)

Unit: mm

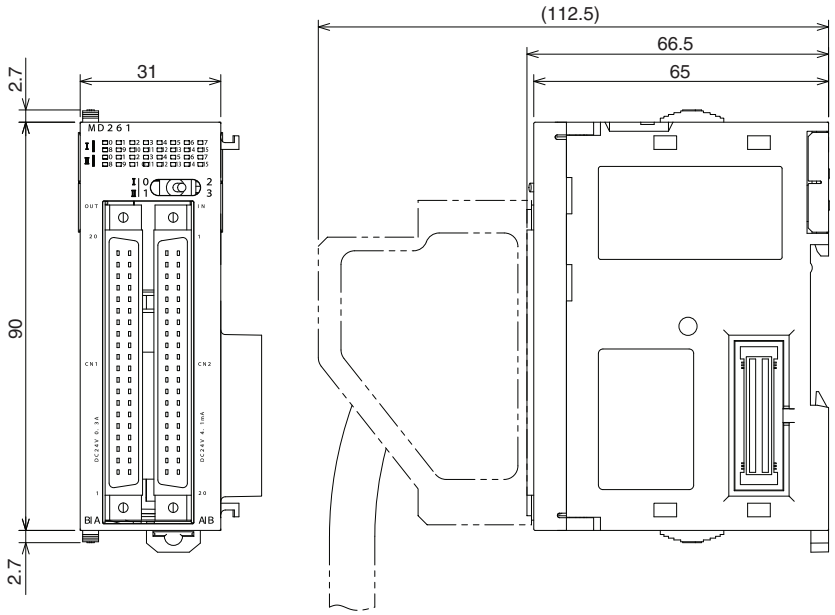

Units with MIL Connector (40-pin × 2)

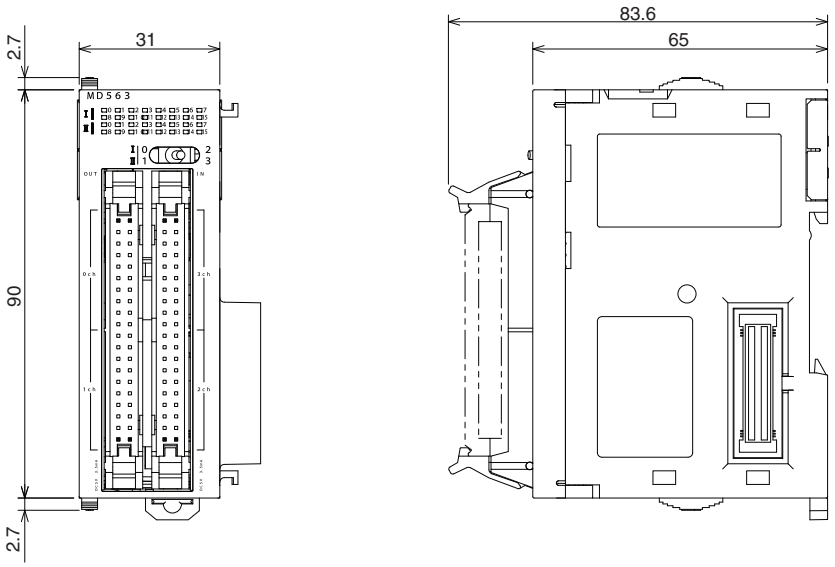

A-2-4 I/O Control Unit and I/O Interface Unit

Unit: mm

CJ1W-IC101
I/O Control Unit

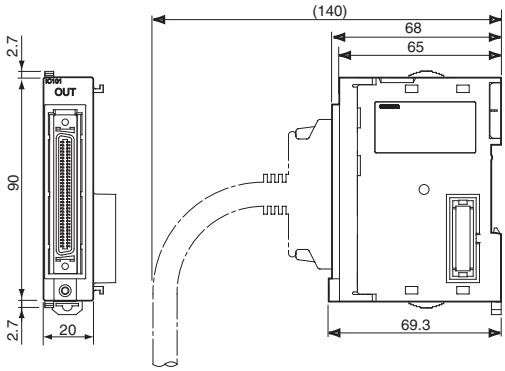

CJ1W-II101
I/O Interface Unit

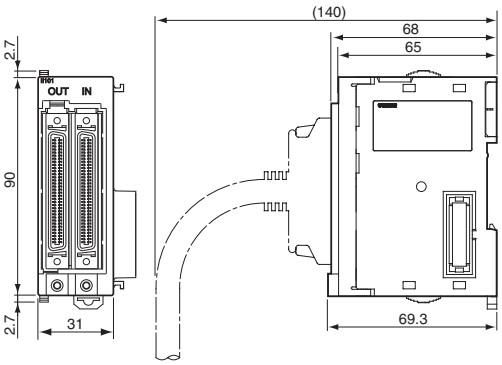

A-2-5 I/O Memory Card

HMC-SD□□□

Unit: mm

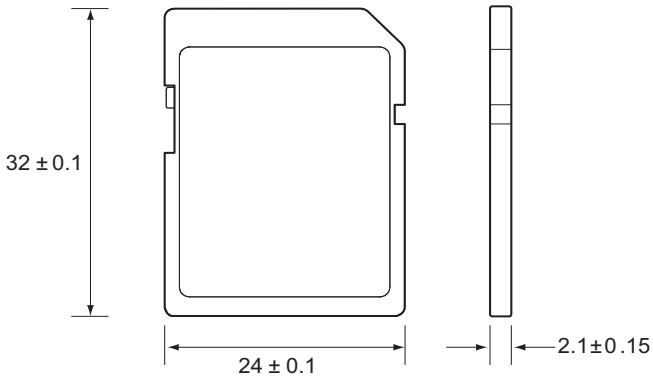

A-2-6 Pulse I/O Modules

Unit: mm

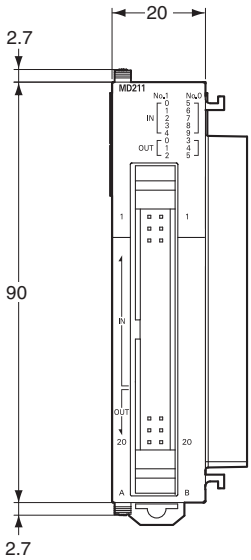

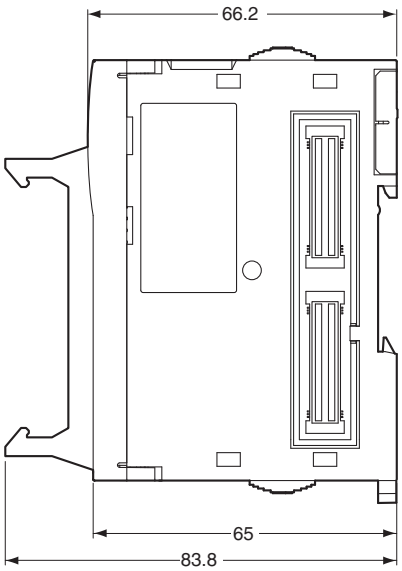

A-2-7 B7A Interface Unit

CJ1W-B7A□□ Interface Unit

Unit: mm

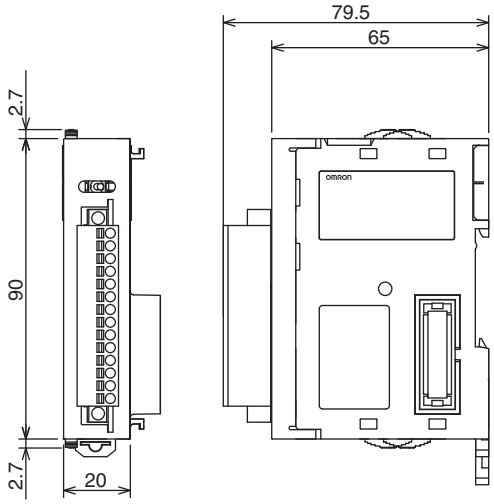

A-3 Fatal and Non-fatal Error Details

This appendix describes the fatal and non-fatal errors that can occur in the CPU Unit.

A-3-1 Fatal Errors

Operation will stop if a fatal error occurs. Information on the fatal error is displayed on the Error Tab Page opened from the CX-Programmer's PLC Error Window. Check the details on the error based on the message that is displayed, and the error flags and error information in the Auxiliary Area, and take suitable countermeasures. The following list shows the fatal errors.

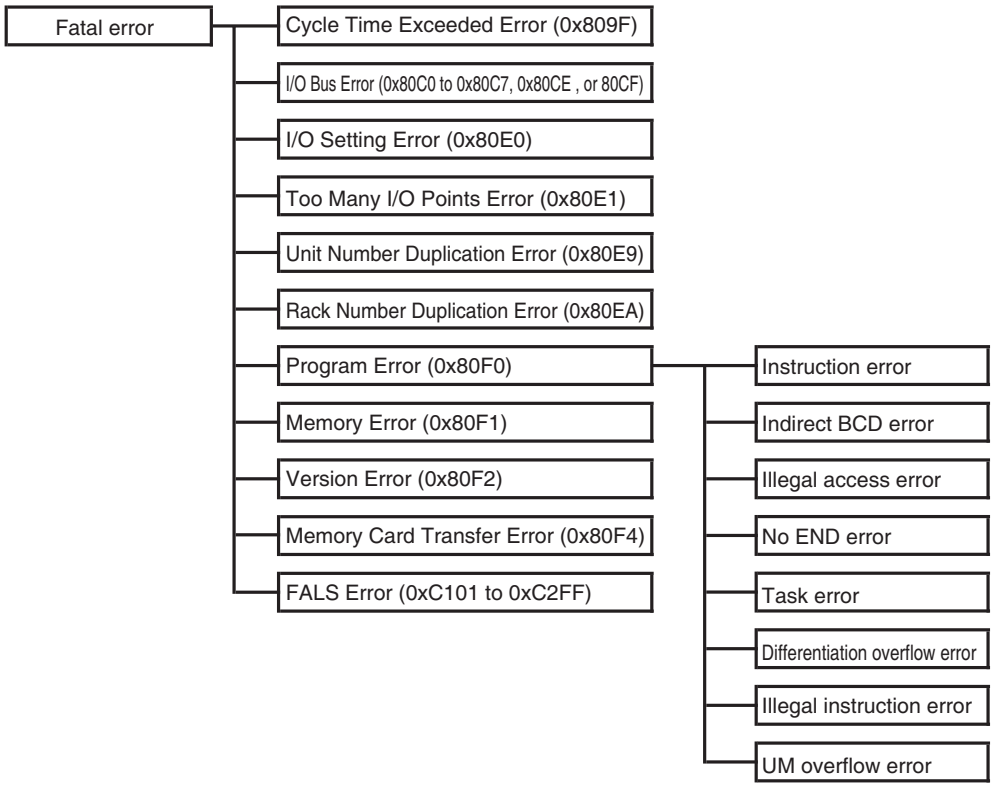

Table of Fatal Errors

- The table of fatal errors is arranged in ascending order of error codes.
- When two or more errors occur at the same time, the error code of the more serious error will be recorded in A400.
- If the IOM Hold Bit hasn't been turned ON to protect I/O memory, all nonretained areas of I/O memory will be cleared when a fatal error other than FALS(007) occurs.
- If the IOM Hold Bit is ON, the contents of I/O memory will be retained but all outputs will be turned OFF.

Error	Error code (in A400)	Error flag (Auxiliary Area)	Flag and word data	Probable cause	Possible remedy
Cycle Time Exceeded Error	0x809F	A401.08: Cycle Time Exceeded Flag	---	The cycle time has exceeded the maximum cycle time (watch cycle time) set in the PLC Setup.	Change the program to reduce the cycle time or change the maximum cycle time setting. Check the Maximum Interrupt Task Processing Time in A440 and see if the Cycle Time Watch Time can be changed.*2 The cycle time can be reduced by dividing unused parts of the program into tasks, jumping unused instructions in tasks, and disabling cyclic refreshing of Special I/O Units that don't require frequent refreshing.
I/O Bus Error	0x80C0 to 0x80C7, 0x80CE, or 0x80CF	A401.14: I/O Bus Error Flag	A404: I/O Bus Error Slot and Rack Numbers	Error has occurred in the bus line between the CPU and I/O Units or the End Cover is not connected to the CPU Rack or an Expansion Rack.*1 A404.08 to A404.15 contain the error rack number (00 to 07) in binary. 0F hex indicates that the rack cannot be determined.0E hex indicates the End Cover is not connected to the CPU Rack or an Expansion Rack.	Try turning the power OFF and ON again. If the error isn't corrected, turn the power OFF and check cable connections between the I/O Units and Racks and the End Covers. Check for damage to the cable or Units. Turn the Rack's power supply OFF and then ON again.

*1 A404.00 to A404.07 contain the error slot number (00 to 09) in binary. “0F hex” indicates that the slot cannot be determined.
“0B hex” indicates a bus error occurred for the built-in EtherNet/IP port.
“0E hex” indicates the End Cover is not connected to the CPU Rack or an Expansion Rack.

*2 The maximum processing time for an interrupt task will not be stored in A440 if High-speed interrupt function is enabled in the PLC Setup.

Error	Error code (inA400)	Error flag (Auxiliary Area)	Flag and word data	Probable cause	Possible remedy
I/O Setting Error	0x80E0	A401.10: I/O Setting Error Flag	A405.08	The Units that are connected do not agree with the registered I/O tables or the number of Units that are connected does not agree with the number in the registered I/O table.	• If the number of Units is not correct, turn OFF the power supply and correctly connect the proper Units. • With the CJ3 CPU Unit, if the I/O verification operation*1 is performed when the number of Units is incorrect, mismatch errors will be detected for all Units registered in the I/O tables. If this occurs even when the number of Units is correct, it is possible that a Unit has failed and is not being correctly recognized. Generate new I/O tables, and then read the I/O tables and check for Units that are not being recognized. • If the number of Units is correct, confirm the Unit in discrepancy, turn OFF the power supply, and then correct the Unit connections. • If there is a mistake in the I/O tables, generate new I/O tables or edit the tables to correct the mistake.
				An Interrupt Input Unit has been mounted in the wrong slot, i.e., not in one of the following slots on the CPU Rack, or has been registered in the registered I/O tables in any slots other than the following slots. • Slots 0 to 4 in CPU Rack	• When an Interrupt Input Unit is used, A405.08 will turn ON if the Interrupt Input Unit is in the wrong position or is registered in the wrong position. • If the Unit is connected in a slot on the CPU Rack that is not in the specified range, move the Unit to one of the specified CPU Rack slots. • If the Unit is mounted in a slot on the CPU Rack that is not in the specified range, correct the I/O tables so that the Interrupt Input Unit is correctly registered to one of the specified slots.
				Registered I/O tables for the CJ2H-CPU6□-EIP, CJ2M-CPU3□ or CJ3M-CPU3□ were downloaded to the CJ3M-CPU1□. Or, registered I/O tables for the CJ2H-CPU6□, CJ2M-CPU1□ or CJ3M-CPU1□ were downloaded to the CJ3M-CPU3□.	Delete or correct the I/O tables using the CX-Programmer.
Too Many I/O Points Error	0x80E1	A401.11: Too Many I/O Points Flag	A407.13 to A407.15: Too Many I/O Points, Details 2	One of the following values exceeds the maximum or is allocated to more than one Unit. 1. The total number of I/O points set in the I/O tables exceeds the maximum allowed for the CPU Unit (bits: 000) 2. There are more than 32 interrupt inputs (bits: 001). 3. Three or more Pulse I/O Modules were connected to a CJ3M CPU Unit (bits: 100). 4. The number of Expansion Racks exceeds the maximum (bits: 101). 5. More than 10 I/O Units are connected to one Rack (bits: 111).*2	Correct the problem and then turn the power supply OFF and back ON.

*1 Execute the I/O verification operation by selecting ***Options*** – ***Compare with Project*** from the I/O Table Menu of the CX-Programmer.

*2 Regardless of the error that occurred, the three bits in parentheses will be stored in A407.13 to A407.15. The value will simultaneously be stored in A407.00 to A407.12.

Error	Error code (inA400)	Error flag (Auxiliary Area)	Flag and word data	Probable cause	Possible remedy
Unit/Rack Number Duplication Error	0x80E9	A401.13: Duplication Error Flag	A410: CPU Bus Unit Duplicated Number Flags	The same number has been allocated to more than one CPU Bus Unit.*1	Check the unit numbers, eliminate the duplications, and turn the Rack's power supply OFF and then ON again.
			A411 to A416: Special I/O Unit Duplicated Number Flags	The same number has been allocated to more than one Special I/O Unit.*2	Check the unit numbers, eliminate the duplications, and turn the Rack's power supply OFF and then ON again.
Expansion Rack Duplicated Rack Number	0x80EA	A401.13: Duplication Error Flag	A409: Expansion Rack Duplicated Rack Number	The same I/O word has been allocated to more than one Basic I/O Unit.	Check allocations to Units on the rack number whose bit is ON in A409.00 to A409.07. Correct the allocations so that no words are allocated more than once, including to Units on other Racks, and turn the Rack's power supply OFF and then ON again.
				An Expansion Rack's starting word address exceeds CIO 0901.The corresponding bit in A409.00 to A409.07 (Racks 0 to 7) will be turned ON.	Check the first word setting for the Rack indicated in A409.00 to A409.07 and change the setting to a valid word address below CIO 0900 with a Programming Device (such as a CX-Programmer).
Program Error	0x80F0	A401.09: Program Error Flag	A294 to A299: Program Error Information	The program is incorrect. See the following rows of this table for details. The address at which the program stopped will be output to A298 and A299.	Check the program using A298/A299 and the error flags to find the mistake, and correct the program. Correct the program and then clear the error.
				A295.11: No END error	Be sure that there is an END(001) instruction at the end of the task specified in A294 (program stop task number).
				A295.15: UM overflow error The last address in UM (user program memory) has been exceeded.	Transfer the program again.
				A295.13: Differentiation overflow error Too many differentiated instructions have been inserted or deleted during online editing.	Return to PROGRAM mode and transfer the program again.
				A295.12: Task error A task error has occurred. The following conditions will generate a task error. 1. There is no executable cyclic task. 2. There is no task that corresponds to the interrupt that was input. (Only when the *Stop CPU on Instruction Error* parameter in the PLC Setup is set to *Stop*.)	• Check the startup cyclic task attributes. • Check the execution status of each task as controlled by TKON(820) and TKOF(821). • Make sure that all of the task numbers specified in TKON(820), TKOF(821), and MSKS(690) instructions have corresponding tasks. Use MSKS(690) to mask any I/O or scheduled interrupt tasks that are not being used and that do not have programs set for them. • If the power OFF interrupt task is enabled in the PLC Setup, make sure that the power OFF interrupt task has been created.
				A295.10: Illegal access error An illegal access error has occurred and the PLC Setup has been set to stop operation for an instruction error. The following are illegal access errors: 1. Reading/writing a parameter area. 2. Writing memory that is not installed. 3. Writing an EM bank that is EM file memory. 4. Writing to a read-only area. 5. Indirect DM/EM address that is not in BCD when BCD mode is specified.	Find the program address where the error occurred (A298/A299) and correct the instruction.

Error	Error code (inA400)	Error flag (Auxiliary Area)	Flag and word data	Probable cause	Possible remedy
Program Error	0x80F0	A401.09: Program Error Flag	A294 to A299: Program Error Information	Indirect DM/EM BCD Error Flag (A295.09) turned ON: An indirect DM/EM BCD error has occurred, causing the AER Flag to turn ON. Also, the PLC Setup has been set to stop operation for an instruction error.	Find the program address where the error occurred using A298/A299 and correct the indirect addressing (the indirect address or the word holding the indirect address) or change to binary mode.
				Instruction Error Flag (A295.08) turned ON: Incorrect data values were provided in an operand when an attempt was made to execute an instruction, causing the ER Flag to turn ON, and the PLC Setup has been set to stop operation for an instruction error.	Check the Program Error Position (A298/A299) to find the reason that the ER Flag turned ON and correct the operand data according to the descriptions of the instructions in the *Instructions Reference Manual* (Cat. No. W474).
				A295.14: Illegal instruction error The program contains an instruction that cannot be executed.	Retransfer the program to the CPU Unit.
Memory Error	0x80F1	A401.15: Memory Error Flag	A403: Memory Error Location	An error has occurred in memory. A bit in A403 will turn ON to show the location of the error as listed below.	See below.
				A403.00 ON: A checksum error has occurred in the user program memory. The power was turned OFF while storing data to the flash memory (backup memory).	Transfer the program again.
				A403.04 ON: A checksum error has occurred in the PLC Setup.	Clear the entire PLC Setup to 0000 and reenter the settings.
				A403.05 ON: A checksum error has occurred in the registered I/O tables.	Initialize the registered I/O table and generate a new I/O table.
				A403.07 ON: A checksum error has occurred in the routing tables.	Initialize the routing tables and reenter the tables.
				A403.08 ON: A checksum error has occurred in the CPU Bus Unit Setup.	Initialize the CPU Bus Unit setup and reenter the settings.
Version Error	0x80F2	A401.05: Version Error Flag	A293	The user program that was transferred includes functions that are not supported by the unit version of the CPU Unit.	• Check whether the unit version supports the user program. • Replace the CPU Unit with a CPU Unit with a supported unit version.
Memory Card Transfer Error	0x80F4	A401.03: Memory Card Error Flag	---	When A401.03 is ON: The contents of the Memory Card cannot be correctly read to the CPU Unit when the power is ON.	Check whether the files required for executing the automatic transfer function are available.
FALS(007) Error	0xC101 to 0xC2FF	A401.06: FALS Error Flag	---	FALS(007) has been executed in the program. The error code in A400 will indicate the FAL number. The leftmost digit of the code will be C and the rightmost 3 digits of the code will be from100 to 2FF hex and will correspond to FAL numbers 001 to 511.	Correct according to cause indicated by the FAL number (set by user).

*1 Bits A410.00 to A410.15 correspond to unit numbers 0 to F.

*2 Bits A411.00 to A416.15 correspond to unit numbers 0 to 95.

Error	Error code (inA400)	Error flag (Auxiliary Area)	Flag and word data	Probable cause	Possible remedy
I/O Setting Error	0x80E0	A401.10: I/O Setting Error Flag	A405.08	The Units that are connected do not agree with the registered I/O tables or the number of Units that are connected does not agree with the number in the registered I/O table.	• If the number of Units is not correct, turn OFF the power supply and correctly connect the proper Units. • With the CJ3 CPU Unit, if the I/O verification operation*1 is performed when the number of Units is incorrect, mismatch errors will be detected for all Units registered in the I/O tables. If this occurs even when the number of Units is correct, it is possible that a Unit has failed and is not being correctly recognized. Generate new I/O tables, and then read the I/O tables and check for Units that are not being recognized. • If the number of Units is correct, confirm the Unit in discrepancy, turn OFF the power supply, and then correct the Unit connections. • If there is a mistake in the I/O tables, generate new I/O tables or edit the tables to correct the mistake.
				An Interrupt Input Unit has been mounted in the wrong slot, i.e., not in one of the following slots on the CPU Rack, or has been registered in the registered I/O tables in any slots other than the following slots. • Slots 0 to 4 in CPU Rack	• When an Interrupt Input Unit is used, A405.08 will turn ON if the Interrupt Input Unit is in the wrong position or is registered in the wrong position. • If the Unit is connected in a slot on the CPU Rack that is not in the specified range, move the Unit to one of the specified CPU Rack slots. • If the Unit is mounted in a slot on the CPU Rack that is not in the specified range, correct the I/O tables so that the Interrupt Input Unit is correctly registered to one of the specified slots.
				Registered I/O tables for the CJ2H-CPU6□-EIP or CJ2M-CPU3□ were downloaded to the CJ2M-CPU6□ or CJ2M-CPU1□. Or, registered I/O tables for the CJ2H-CPU6□ or CJ2M-CPU1□ were downloaded to the CJ2M-CPU6□-EIP or CJ2M-CPU3□.	Delete or correct the I/O tables using the CX-Programmer.
Too Many I/O Points Error	0x80E1	A401.11: Too Many I/O Points Flag	A407.13 to A407.15: Too Many I/O Points, Details 2	One of the following values exceeds the maximum or is allocated to more than one Unit. 1. The total number of I/O points set in the I/O tables exceeds the maximum allowed for the CPU Unit (bits: 000) 2. There are more than 32 interrupt inputs (bits: 001). 3. Three or more Pulse I/O Modules were connected to a CJ3 CPU Unit (bits: 100). 4. The number of Expansion Racks exceeds the maximum (bits: 101). 5. More than 10 I/O Units are connected to one Rack (bits: 111).*2	Correct the problem and then turn the power supply OFF and back ON.
Unit/Rack Number Duplication Error	0x80E9	A401.13: Duplication Error Flag	A410: CPU Bus Unit Duplicated Number Flags	The same number has been allocated to more than one CPU Bus Unit.*4	Check the unit numbers, eliminate the duplications, and turn the Rack's power supply OFF and then ON again.
			A411 to A416: Special I/O Unit Duplicated Number Flags	The same number has been allocated to more than one Special I/O Unit.*5	Check the unit numbers, eliminate the duplications, and turn the Rack's power supply OFF and then ON again.

Error	Error code (inA400)	Error flag (Auxiliary Area)	Flag and word data	Probable cause	Possible remedy
Expansion Rack Duplicated Rack Number	0x80EA	A401.13: Duplication Error Flag	A409: Expansion Rack Duplicated Rack Number	The same I/O word has been allocated to more than one Basic I/O Unit.	Check allocations to Units on the rack number whose bit is ON in A409.00 to A409.03. Correct the allocations so that no words are allocated more than once, including to Units on other Racks, and turn the Rack's power supply OFF and then ON again.
				An Expansion Rack's starting word address exceeds CIO 0901.The corresponding bit in A409.00 to A409.03 (Racks 0 to 3) will be turned ON.	Check the first word setting for the Rack indicated in A409.00 to A409.03 and change the setting to a valid word address below CIO 0900 with a Programming Device (such as a CX-Programmer).
Program Error	0x80F0	A401.09: Program Error Flag	A294 to A299: Program Error Information	The program is incorrect. See the following rows of this table for details. The address at which the program stopped will be output to A298 and A299.	Check the program using A298/A299 and the error flags to find the mistake, and correct the program. Correct the program and then clear the error.
				A295.11: No END error	Be sure that there is an END(001) instruction at the end of the task specified in A294 (program stop task number).
				A295.15: UM overflow error The last address in UM (user program memory) has been exceeded.	Transfer the program again.
				A295.13: Differentiation overflow error Too many differentiated instructions have been inserted or deleted during online editing.	Return to PROGRAM mode and transfer the program again.
				A295.12: Task error A task error has occurred. The following conditions will generate a task error. 1. There is no executable cyclic task. 2. There is no task that corresponds to the interrupt that was input. (Only when the *Stop CPU on Instruction Error* parameter in the PLC Setup is set to *Stop*.)	• Check the startup cyclic task attributes. • Check the execution status of each task as controlled by TKON(820) and TKOF(821). • Make sure that all of the task numbers specified in TKON(820), TKOF(821), and MSKS(690) instructions have corresponding tasks. Use MSKS(690) to mask any I/O or scheduled interrupt tasks that are not being used and that do not have programs set for them. • If the power OFF interrupt task is enabled in the PLC Setup, make sure that the power OFF interrupt task has been created.
				A295.10: Illegal access error An illegal access error has occurred and the PLC Setup has been set to stop operation for an instruction error. The following are illegal access errors: 1. Reading/writing a parameter area. 2. Writing memory that is not installed. 3. Writing an EM bank that is EM file memory. 4. Writing to a read-only area. 5. Indirect DM/EM address that is not in BCD when BCD mode is specified.	Find the program address where the error occurred (A298/A299) and correct the instruction.
				Indirect DM/EM BCD Error Flag (A295.09) turned ON: An indirect DM/EM BCD error has occurred, causing the AER Flag to turn ON. Also, the PLC Setup has been set to stop operation for an instruction error.	Find the program address where the error occurred using A298/A299 and correct the indirect addressing (the indirect address or the word holding the indirect address) or change to binary mode.
				Instruction Error Flag (A295.08) turned ON: Incorrect data values were provided in an operand when an attempt was made to execute an instruction, causing the ER Flag to turn ON, and the PLC Setup has been set to stop operation for an instruction error.	Check the Program Error Position (A298/A299) to find the reason that the ER Flag turned ON and correct the operand data according to the descriptions of the instructions in the *Instructions Reference Manual* (Cat. No. W474).
				A295.14: Illegal instruction error The program contains an instruction that cannot be executed.	Retransfer the program to the CPU Unit.

Error	Error code (inA400)	Error flag (Auxiliary Area)	Flag and word data	Probable cause	Possible remedy
Memory Error	0x80F1	A401.15: Memory Error Flag	A403: Memory Error Location	An error has occurred in memory. A bit in A403 will turn ON to show the location of the error as listed below.	See below.
				A403.00 ON: A checksum error has occurred in the user program memory. The power was turned OFF while storing data to the flash memory (backup memory).	Transfer the program again.
				A403.04 ON: A checksum error has occurred in the PLC Setup.	Clear the entire PLC Setup to 0000 and reenter the settings.
				A403.05 ON: A checksum error has occurred in the registered I/O tables.	Initialize the registered I/O table and generate a new I/O table.
				A403.07 ON: A checksum error has occurred in the routing tables.	Initialize the routing tables and reenter the tables.
				A403.08 ON: A checksum error has occurred in the CPU Bus Unit Setup.	Initialize the CPU Bus Unit setup and reenter the settings.
Version Error	0x80F2	A401.05: Version Error Flag	A293	The user program that was transferred includes functions that are not supported by the unit version of the CPU Unit.	• Check whether the unit version supports the user program. • Replace the CPU Unit with a CPU Unit with a supported unit version.
Memory Card Transfer Error	0x80F4	A401.03: Memory Card Error Flag	---	When A401.03 is ON: The contents of the Memory Card cannot be correctly read to the CPU Unit when the power is ON.	Check whether the files required for executing the automatic transfer function are available.
FALS(007) Error	0xC101 to 0xC2FF	A401.06: FALS Error Flag	---	FALS(007) has been executed in the program. The error code in A400 will indicate the FAL number. The leftmost digit of the code will be C and the rightmost 3 digits of the code will be from100 to 2FF hex and will correspond to FAL numbers 001 to 511.	Correct according to cause indicated by the FAL number (set by user).

*1 Execute the I/O verification operation by selecting ***Options*** – ***Compare with Project*** from the I/O Table Menu of the CX-Programmer.

*2 Regardless of the error that occurred, the three bits in parentheses will be stored in A407.13 to A407.15. The value will simultaneously be stored in A407.00 to A407.12.

*3 Bits A410.00 to A410.15 correspond to unit numbers 0 to F.

*4 Bits A411.00 to A416.15 correspond to unit numbers 0 to 95.

A-3-2 Non-fatal Errors

Operation continues when a non-fatal error occurs. Connect the CX-Programmer to display the error message in the Error Log Dialog Box on the CX-Programmer.

The cause of the error can be determined from the error message and related Auxiliary Area flags and words. The following list shows the non-fatal errors.

- Non-fatal errors
  - Duplicated Refreshing Error (CJ1: Interrupt task error) (0x008B)
  - Basic I/O Error (0x009A)
  - PLC Setup Error (0x009B)
  - Backup Memory Error (0x00F1)
  - Tag Memory Error (0x00F2)
  - System Work Error (0x00F3)
  - Battery Error (0x00F7)
  - CPU Bus Unit Error (0x0200 to 0x020F)
  - Special I/O Unit Error (0x0300 to 0x035F or 0x03FF)
  - CPU Bus Unit Setting Error (0x0400 to 0x040F)
  - Special I/O Unit Setting Error (0x0500 to 0x055F)
  - FAL(006) Error (0x4104 to 0x42FF)

Table of Non-fatal Errors

- The table of non-fatal errors is arranged in ascending order of error codes.
- When two or more errors occur at the same time, the error code of the more serious error will be recorded in A400.
- When the IOM Hold Bit is set to ON, I/O memory will be retained and outputs to the Output Unit will turn OFF.

Error	Error code (in A400)	Error flag (Auxiliary Area)	Flag and word data	Probable cause	Possible remedy
Duplicated Refreshing Error (CJ1: Interrupt task error)	0x008B	A402.13: Duplicated Refresh Error Flag	A426: Unit number where duplicated refresh error occurred	ON when the Detect Duplicated Refresh Errors setting in the PLC Setup is set to *Detect* and one of the following occurs for the same Special I/O Unit. • IORF(097), FIORF(225), IORD(222) or IOWR(223) in a cyclic task are competing with FIORF(225), IORF(097), IORD(222) or IOWR(223) in an interrupt task. • IORF(097), FIORF(225), IORD(222) or IOWR(223) was executed in an interrupt task when I/O was being refreshed.*1	Check the program. Either disable detection of duplicated refresh errors in the PLC Setup or correct the problem in the program.
Basic I/O Error	0x009A	A402.12: CJ-series Basic I/O Unit Error Flag	A408: Basic I/O Unit Error, Slot Number	An error has occurred in a Basic I/O Unit.*2	Check the Basic I/O Unit to see whether a fuse needs to be replaced.
PLC Setup Error	0x009B	A402.10: PLC Setup Error Flag	---	There is a setting error in the PLC Setup.	Change the indicated setting to a valid setting.
Backup Memory Error	0x00F1	A315.15: Backup Memory Error Flag	---	Writing to the built-in flash memory failed.	Operation may not be possible the next time power is restored after a power interruption. Replace the CPU Unit.
Tag Memory Error	0x00F2	A315.12: Tag Memory Error Flag	---	An error occurred in memory where network tags are stored.	Transfer the program again.
System Work Error	0x00F3	A315.04: System Work Error Flag A402.00: Other Non-fatal Error Flag	---	An error occurred in the memory for online editing.	Operation may not be possible the next time power is restored after a power interruption. Transfer the program again.
Battery Error	0x00F7	A402.04: Battery Error Flag	---	This error occurs when the PLC Setup has been set to detect battery errors and the CPU Unit's backup battery is missing or its voltage has dropped.	Check battery and replace if necessary. Change the PLC Setup setting if battery-free operation is being used.
CPU Bus Unit Error	0x0200 to 0x020F	A402.07: CPU Bus Unit Error Flag	A417: CPU Bus Unit Error, Unit Number Flags	An error occurred in a data exchange between the CPU Unit and a CPU Bus Unit.*4	Check the Unit indicated in A417. Refer to the Unit's operation manual to find and correct the cause of the error. Restart the Unit by toggling its Restart Bit or turn the power OFF and ON again. Replace the Unit if it won't restart.
Special I/O Unit Error	0x0300 to 0x035F or 0x03FF	A402.06: Special I/O Unit Error Flag	A418 to A423: Special I/O Unit Error, Unit Number Flags	An error occurred in a data exchange between the CPU Unit and a Special I/O Unit.*5	Check the Unit indicated in A418 to A423. Refer to the Unit's operation manual to find and correct the cause of the error. Restart the Unit by toggling its Restart Bit or turn the power OFF and ON again. Replace the Unit if it won't restart.
CPU Bus Unit Setting Error	0x0400 to 0x040F	A402.03: CPU Bus Unit Setting Error Flag	A427: CPU Bus Unit Setting Error, Unit Number Flags	An installed CPU Bus Unit does not match the CPU Bus Unit registered in the I/O tables.*6	Change the registered I/O table.
Special I/O Unit Setting Error	0x0500 to 0x055F	A402.02: Special I/O Unit Setting Error Flag	A428 to A433: Special I/O Unit Setting Error, Unit Number Flags	An installed Special I/O Unit does not match the Special I/O Unit registered in the I/O tables.*7	Change the registered I/O table.

Error	Error code (in A400)	Error flag (Auxiliary Area)	Flag and word data	Probable cause	Possible remedy
FAL(006) Error	0x4101 to 0x42FF	A402.15: FAL Error Flag	A360 to A391: Executed FAL Number Flags	FAL(006) has been executed in program.*8	Correct according to cause indicated by FAL number (set by user).

*1 If cyclic refreshing is not disabled in the PLC Setup for a Special I/O Unit and IORF(097), FIORF(225), IORD(222) or IOWR(223) is executed for the same Special I/O Unit in an interrupt task, a duplicate refreshing status will occur and an duplicated refreshing error will occur.

*2 A408 contains the errant rack/slot number.

*3 The corresponding flag in A417 is turned ON to indicate the problem Unit.

*4 The corresponding flag in A418 to A423 is turned ON to indicate the problem Unit.

*5 The corresponding flag in A427 will be ON.

*6 The corresponding flag in A428 to A433 will be ON.

*7 Executed FAL Number Flags in consecutive bits in A360 to A391 correspond to FAL numbers 001 to 511.
The error code in A400 will indicate the FAL number.
The leftmost digit of the code will be 4 and the rightmost 3 digits of the code will be from 101 to 2FF hex and will correspond to FAL numbers 001 to 511.

A-4 Connecting to a Serial Port on the CPU Unit

This appendix provides information on configurations and wiring methods when connecting various functionality to a serial port on a CPU Unit.

A-4-1 Serial Port Interface Types and Specifications

With the following configurations, the serial port on a CJ3 CPU Unit can be used with an RS-232C or RS-422A/485 interface. In this appendix, serial ports on CPU Units with these interfaces are called RS-232C ports and RS-422A/485 ports.

Interface / Model	RS-232C	RS-422A/485	
		Not isolated	Isolated
CJ3M-CPU1□/3□	Built into the CPU Unit as a standard feature.	A CJ1W-CIF11 RS-422A Converter is mounted directly to the built-in RS-232C interface.	The built-in RS-232C interface and an NT-AL001 RS-232C/RS-422A Link Adapter are connected with a cable.

RS-232C Interface Specifications

● CPU Unit Built-in RS-232C Interface Specifications

- Connector Pin Arrangement

Pin No.	Signal	Name	Direction
1	FG	Protection earth	---
2	SD (TXD)	Send data	Output
3	RD (RXD)	Receive data	Input
4	RS (RTS)	Request to send	Output
5	CS (CTS)	Clear to send	Input
6	5 V	Power supply	---
7	DR (DSR)	Data set ready	Input
8	ER (DTR)	Data terminal ready	Output
9	SG (0 V)	Signal ground	---
Connector hood	FG	Protection earth	---

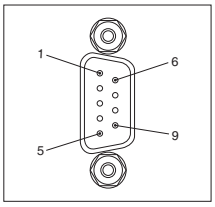

Precautions for Safe Use

Do not use the 5-V power from pin 6 of the RS-232C port on the CPU Unit for anything but the NT-AL001 Link Adapter, CJ1W-CIF11 RS-422A Converter. The external device or the CPU Unit may be damaged.

● Communications Specifications

Item	Specification
Communications method	Half duplex
Synchronization	Start-stop
Baud rate	0.3/0.6/1.2/2.4/4.8/9.6/19.2/38.4/57.6/115.2 kbps*1
Transmission distance	15 m max.
Interface	EIA RS-232C
Protocol	Host Link, NT Link, 1:N, No-protocol, Serial PLC Links, or Peripheral Bus

*1 Baud rates for the RS-232C are specified only up to 19.2 kbps. The CJ Series supports serial communications from 38.4 kbps to 115.2 kbps, but the connected devices cannot support these speeds. Lower the baud rate if necessary.

RS-422A/485 Interface Specifications

● Converting Built-in RS-232C to RS-422A/485

When converting the RS-232C port on a CPU Unit to RS-422A, using one of the following Link Adapters and Conversion Units.

- CJ1W-CIF11 RS-422A Converter
  The maximum distance is 50 m.
  Either RS-422A or RS-485 can be used.
- NT-AL001 RS-232C/RS-422A Link Adapter
  The maximum distance is 500 m.
  Only RS-422A can be used.

CJ1W-CIF11 RS-422A Converter

The CJ1W-CIF11 RS-422A Converter is used to convert RS-232C to RS-422A/485.
It is connected directly to the RS-232C port on a CPU Unit.
It is not isolated, so the maximum distance for RS-422A/485 is 50 m.

Appearance

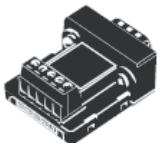

Electric Specifications

- RS-422A/485 Terminal Block

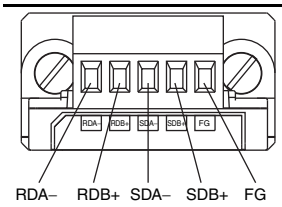

Signal name
RDA–
RDB+
SDA–
SDB+
FG

- RS-232C Connector

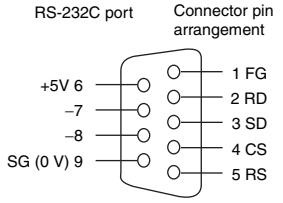

Pin No.	Signal name
1	FG
2	RD
3	SD
4	CS
5	RS
6	+5 V
7, 8	NC
9	SG (0 V)
Hood	NC*

* The hood will have the same electric potential as the connector hood where it is connected.

DIP Switch Settings

Pin No.	Setting	ON	OFF
1	Terminating resistance setting	Connects terminating resistance on both ends of the transmission path.	Disconnects terminating resistance.
2	2-wire/4-wire setting*1	2-wire	4-wire
3	2-wire/4-wire setting*1	2-wire	4-wire
4	Not used.	---	---
5	RS control selection for RD*2	RS control enabled	RS control disabled (Data always received.)
6	RS control selection for SD*3	RS control enabled	RS control disabled (Data always sent.)

*1 Set both pins 2 and 3 to either ON (2-wire) or OFF (4-wire).

*2 To disable the echo-back function, set pin 5 to ON (RS control enabled).

*3 When connecting to a device on the N side in a 1: N connection with the 4-wire method, set pin 6 to ON (RS control enabled).
Also, when connecting by the 2-wire method, set pin 6 to ON (RS control enabled).

Dimensions (Unit: mm)

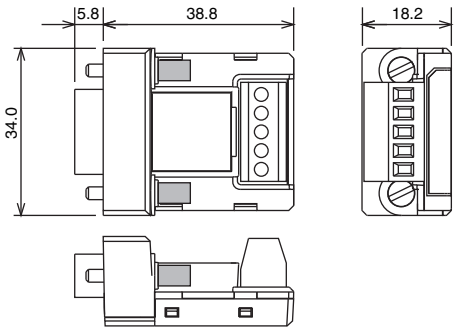

NT-AL001 RS-232C/RS-422A Link Adapter

The NT-AL001 RS-232C/RS-422A Link Adapter is used to connect to devices that have RS-232C or RS-422A terminals. It is connected with a cable to the RS-232C port on a CPU Unit. It is isolated, so the maximum distance for RS-422A is 500 m.

Appearance

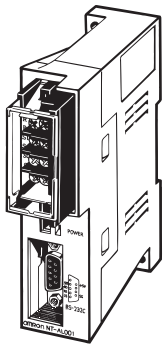

DIP Switch Settings

There is a DIP switch on the NT-AL001 RS-232C/RS-422A Link Adapter that is used to set RS-422A/485 communications parameters. Set the DIP switch as required for the serial communications mode according to the following table.

Pin	Function	Default setting
1	Not used. (Leave set to ON.)	ON
2	Internal terminating resistance setting. ON: Terminating resistance connected. OFF: Terminating resistance not connected.	ON
3	2-wire/4-wire setting	OFF
4	Both pins ON: 2-wire communications Both pins OFF: 4-wire communications	OFF
5	Communications mode*	ON
6	Both pins OFF: Always send. 5 OFF/6 ON: Send when RS-232C's CS is high. 5 ON/6 OFF: Send when RS-232C's CS is low.	OFF

* When connecting to a CJ-series CPU Unit, turn OFF pin 5 and turn ON pin 6.

Application Example

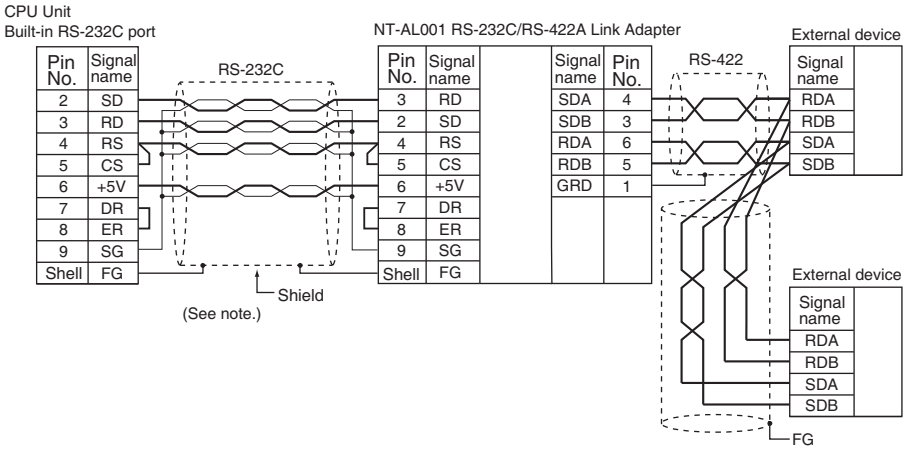

Note Use the special cables for the above cables.

Use the following Cables to connect the RS-232C port to an NT-AL001 RS-232C/RS-422A Link Adapter.

Length	Model
70 cm	XW2Z-070T-1
2 m	XW2Z-200T-1

Wiring the Recommended Cable (XW2Z-070T-1/XW2Z-200T-1)

Wiring with XW2Z-□□0T-1 (10 conductors)

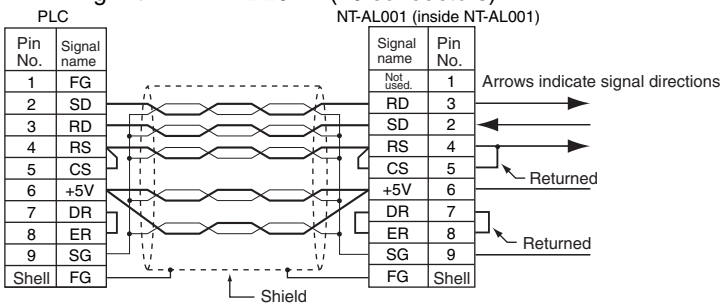

Note The shell (FG) is internally connected to the protective earth (GR) terminal on the CPU Unit. FG can thus be connected by connecting the protective earth (GR) terminal on the Power Supply Unit.

Precautions for Correct Use

- The XW2Z-□□0T-1 Cable is designed to connect the NT-AL001 and contains special wiring for the DS and RS signals. Do not use this cable for any other application. Connecting this cable to other devices can damage them.
- Always turn ON the terminating resistance on the ends of the RS-422A/485 line.

A-4-2 Connection Examples

This section provides connection examples and corresponding connection diagrams.

Refer to *A-4-3 Applicable Connectors and Recommended Cables* for actual wiring methods.

Host Computer (Host Link or Tool Bus)

Note Connections to a computer running the CX-Programmer are the same as those shown here.

● 1:1 Connections via RS-232C Port

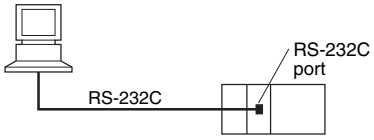

Note The maximum cable length for an RS-232C connection is 15 m. RS-232C communications specifications, however, do not cover transmissions at 19.2 Kbps. Refer to documentation of the device being connected when using this baud rate.

Connection Example for the Host Link Serial Communications Mode

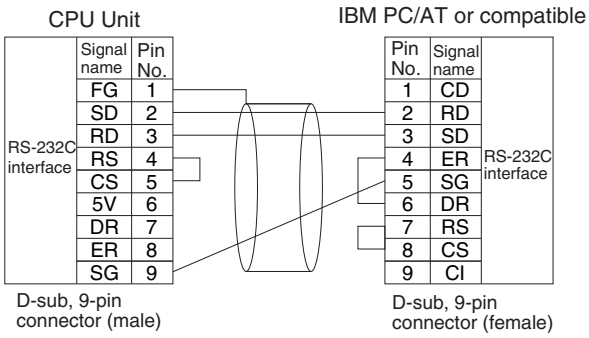

Connection Example for the Peripheral Bus (Toolbus) Serial Communications Mode

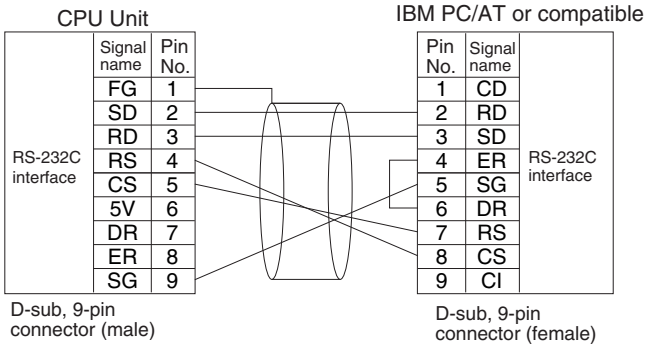

1:N Connections via RS-232C Port

A connection example for converting between RS-232C and RS-422A/485 to use 1:N connections is shown below.

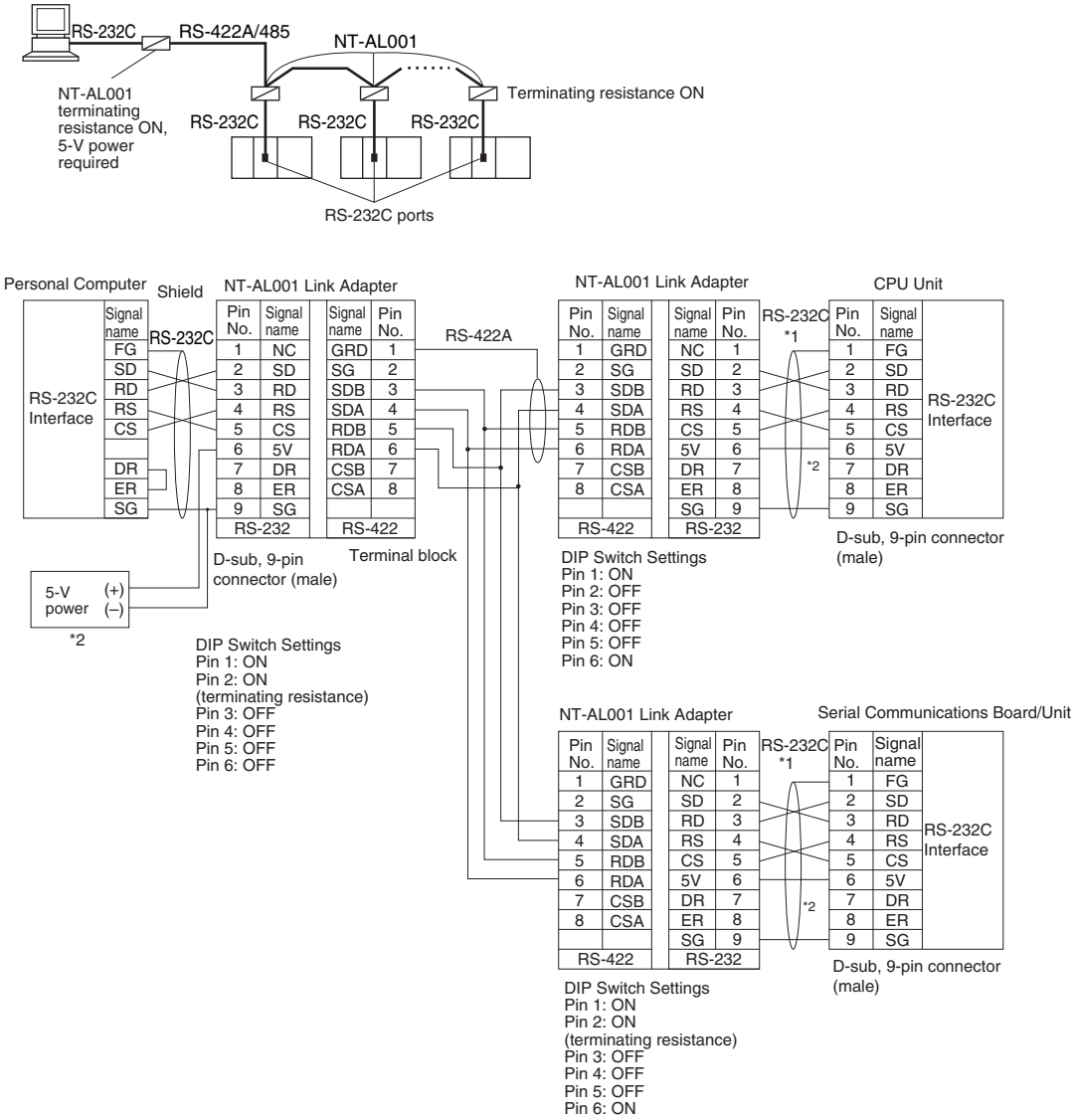

*1 We recommend using the following NT-AL001 RS-232C/RS-422A Link Adapter Connecting Cables to connect to NT-AL001 Link Adapters.

XW2Z-070T-1: 0.7 m
XW2Z-200T-1: 2 m

- Wiring the Recommended Cable (XW2Z-070/200T-1)
  The recommended cables should be wired as shown below. For an RS-232C cable, each signal wire should be twisted with the SG (signal ground) wire and placed in a shielded cable to prevent the effects of noise in noise-prone environments. The 5-V wires can also be twisted with the SG wire to increase noise immunity. Although this wiring is different from that shown in the example above, it can be used to increase noise immunity if required.

Wiring with XW2Z-□□0T-1 (10 conductors)

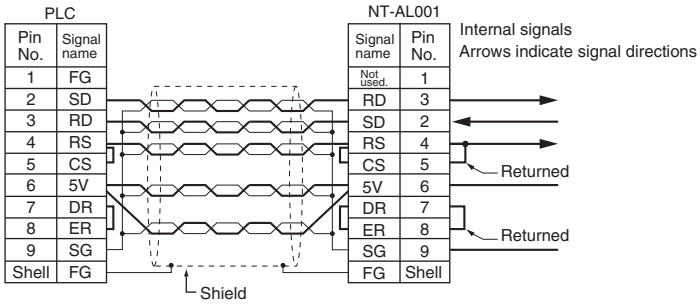

*2 When the NT-AL001 Link Adapter is connected to the RS-232C port on the CPU Unit, 5 V is supplied from pin 6, eliminating the need for a 5-V power supply.

Precautions for Correct Use

- Do not use the 5-V power from pin 6 of the RS-232C port for anything but the NT-AL001 Link Adapter, CJ1W-CIF11 RS-422A Converter. Using this power supply for any other external device may damage the CPU Unit or the external device.
- The XW1Z-□□0T-1 Cable is designed to connect the NT-AL001 and contains special wiring for the CS and RS signals. Do not use this cable for any other application. Connecting this cable to other devices can damage them.

DIP Switch Settings on the NT-AL001 Link Adapter

There is a DIP switch on the NT-AL001 Link Adapter that is used to set RS-422A/485 communications parameters. Set the DIP switch as required for the serial communications mode according to the following table.

Pin	Function	Default setting
1	Not used. (Leave set to ON.)	ON
2	Internal terminating resistance setting. ON: Terminating resistance connected. OFF: Terminating resistance not connected.	ON
3	2-wire/4-wire setting Both pins ON: 2-wire communications Both pins OFF: 4-wire communications	OFF
4		OFF
5	Communications mode Both pins OFF: Always send. 5 OFF/6 ON: Send when RS-232C's CS is high. 5 ON/6 OFF: Send when RS-232C's CS is low.	ON
6		OFF

● RS-422A/485 Ports with 1:1 Connection

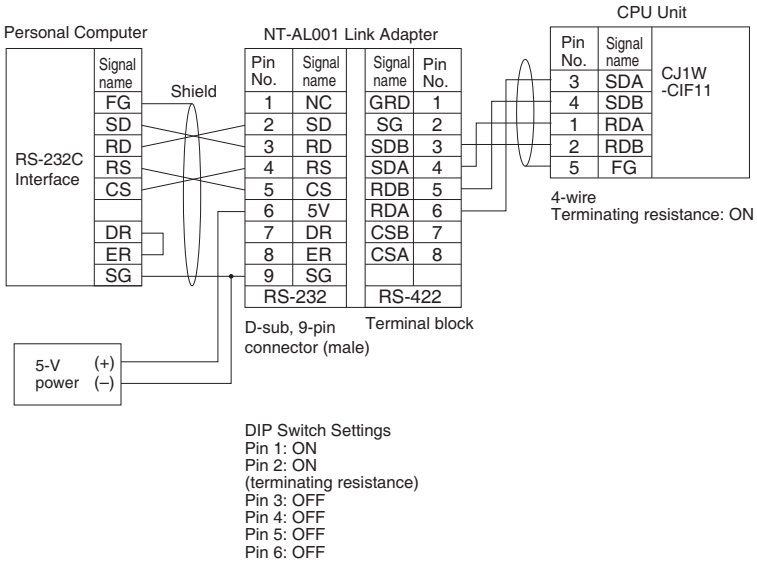

● RS-422A/485 Ports with 1:N Connections

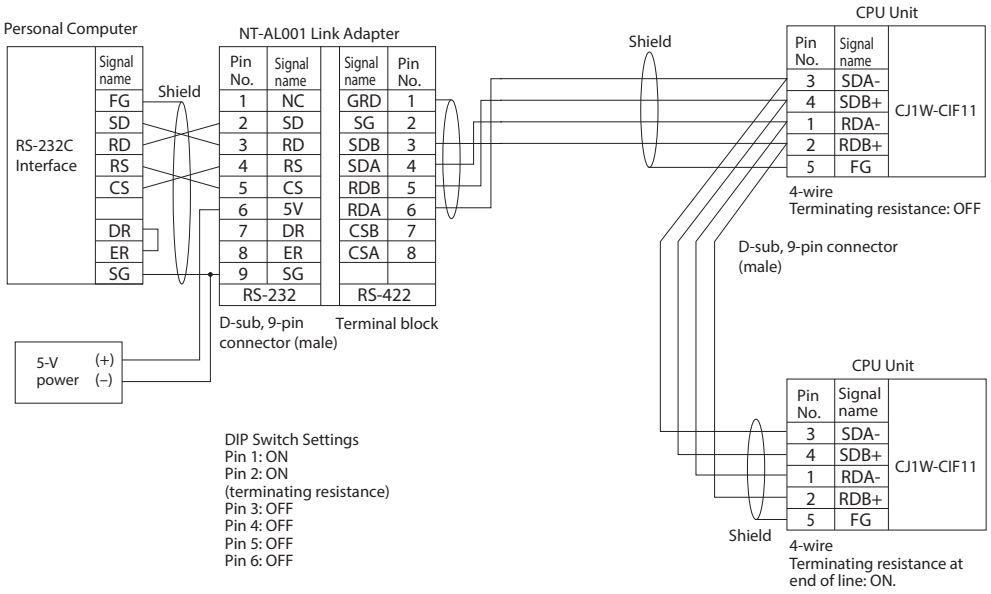

General-purpose External Devices (No-protocol or Serial Gateway)

This section describes the connection patterns and connections for using different ports in Serial Gateway Mode and No-protocol Mode. Up to 32 nodes can be connected for 1:N communications.

Port	Connection type	Diagram
RS-232C	1:1	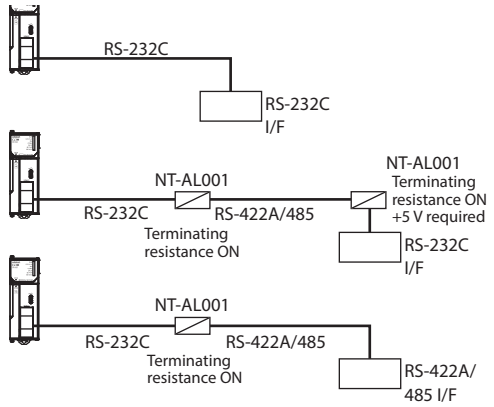
RS-232C	1:N	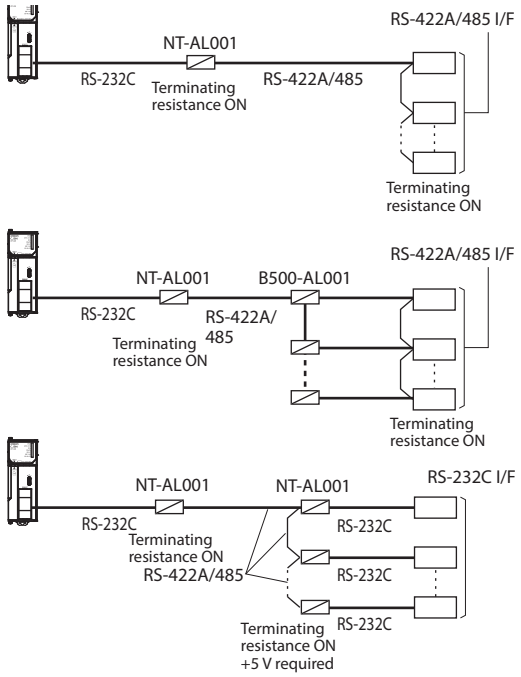

Note 1 The maximum cable length for an RS-232C connection is 15 m. RS-232C communications specifications, however, do not cover transmissions at 19.2 Kbps. Refer to documentation of the device being connected when using this baud rate.

2 The maximum total cable length including branch lines is 500 m for RS-422A/485.

3 The maximum cable length for connecting to the NT-AL001 is 2 m.

4 The maximum branch cable length is 10 m.

Port	Connection type	Diagram
RS-422A/485	1:1	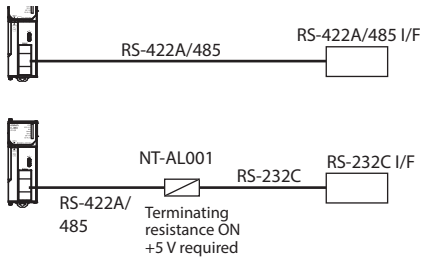
RS-422A/485	1:N	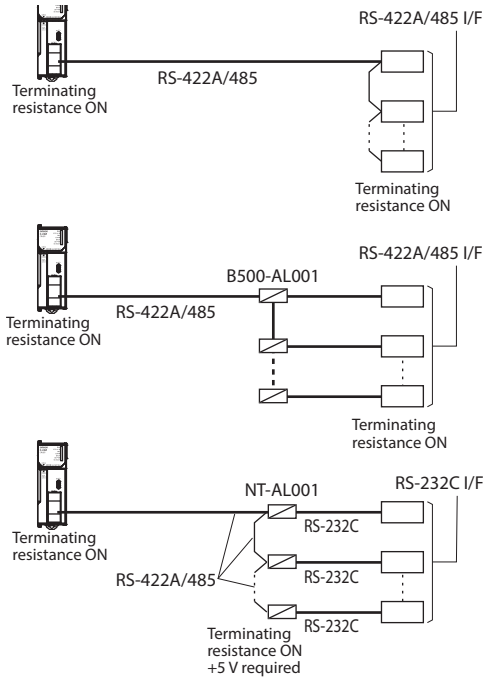

Note 1 The maximum cable length for an RS-232C connection is 15 m. RS-232C communications specifications, however, do not cover transmissions at 19.2 Kbps. Refer to documentation of the device being connected when using this baud rate.

2 The CJ1W-CIF11 RS-422A Converter is not isolated. The maximum transmission distance is therefore 50 m. If the distance exceeds 50 m, or connect the isolated NT-AL001 RS-422A Link Adapter. If you use one of these methods, the maximum total transmission distance will be 500 m.

3 The maximum cable length for connecting to the NT-AL001 is 2 m.

4 The maximum branch cable length is 10 m.

Serial PLC Links for OMRON CJ3M, CJ2M, CP1□, and CP2E PLCs

Examples of connections to use Serial PLC Links are provided below. The Serial PLC Link communications mode is used.

● Connecting with RS-422A Converters

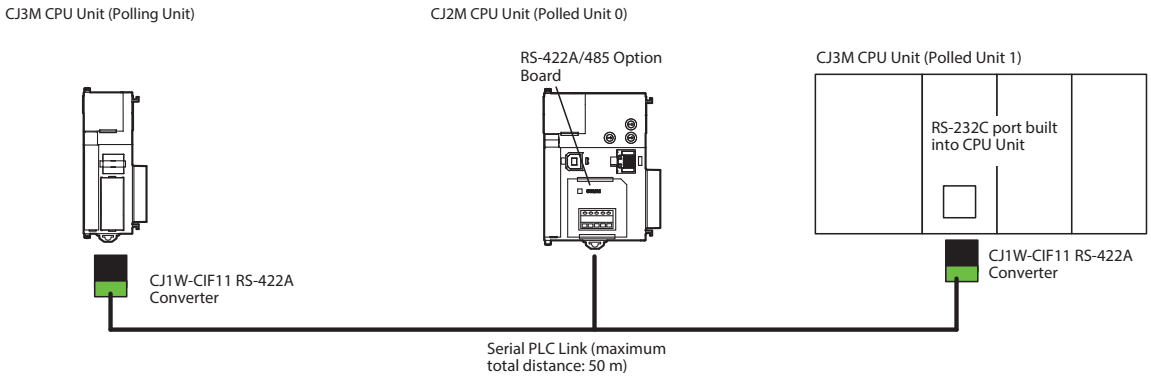

Note The CJ1W-CIF11/CP1W-CIF11 is not isolated. The maximum transmission distance is therefore 50 m. If the distance exceeds 50 m, use the isolated CP1W-CIF12, or the NT-AL001.
Do not use the CJ1W-CIF11/CP1W-CIF11 in the transmission path. If you use the NT-AL001 and CP1W-CIF12, the maximum total transmission distance will be 500 m.

● Connections to RS-232C Ports

RS-232C can also be used to connect two CJ CPU Units with a Serial PLC Link.

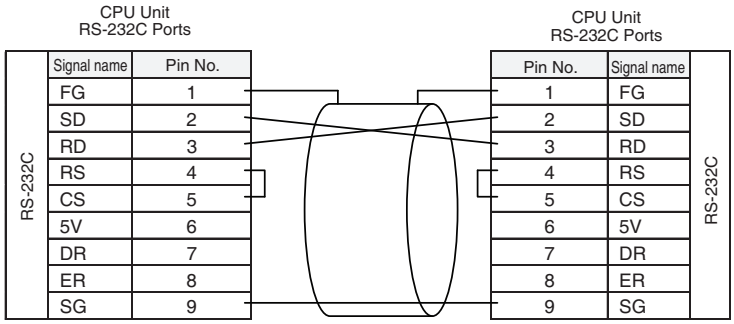

● Connection Example

CJ3M CPU Unit (Polling Unit)
RS-232C Ports
+CJ1W-CIF11
DIP SW
SW1: ON (terminating resistance ON)
SW2: OFF (4-wire)
SW3: OFF (4-wire)
SW4: OFF
SW5: OFF (no RS control for RD)
SW6: OFF (no RS control for SD)

CJ2M CPU Unit (Polled Unit 0)
RS-422A/485 Option Board
CP1W-CIF11/CIF12
DIP SW
SW1: ON (terminating resistance OFF)
SW2: OFF (4-wire)
SW3: OFF (4-wire)
SW4: OFF
SW5: OFF (no RS control for RD)
SW6: ON (RS control for SD)

CJ1M CPU Unit (Polled Unit 1)

CJ1W-CIF11
DIP SW
SW1: ON (terminating resistance ON)
SW2: OFF (4-wire)
SW3: OFF (4-wire)
SW4: OFF
SW5: OFF (no RS control for RD)
SW6: ON (RS control for SD)

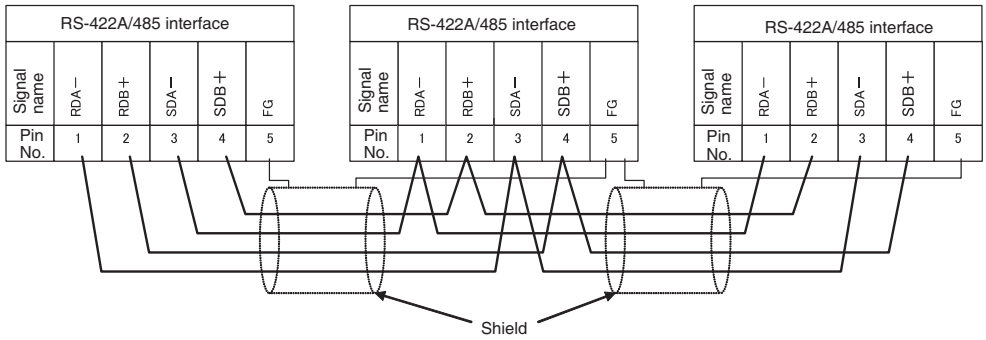

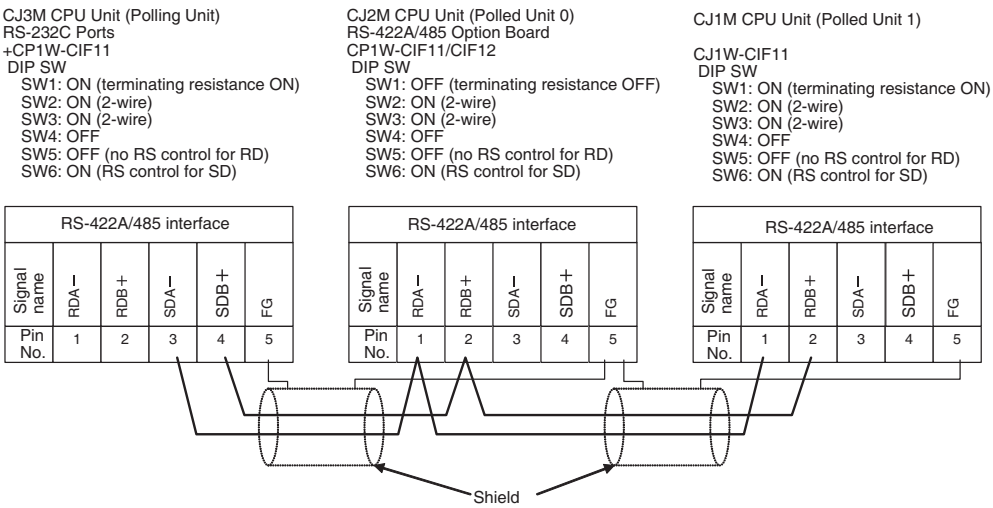

● Connections for Echoback Test

Use the following connections.

RS-232C port

Pin No.	Signal name
2	SD
3	RD
4	RS
5	CS
1	FG
8	ER
7	DR

RS-422A/485 port

Pin No.	Signal name
3	SDA-
4	SDB+
1	RDA-
2	RDB+
5	FG

A-4-3 Applicable Connectors and Recommended Cables

Examples of Recommended RS-232C Wiring

We recommend the following wiring methods for RS-232C, especially in environment prone to noise.

- Use shielded twisted-pair cable for communications cables.
- Use a twisted-pair cable for each signal line and SG (signal ground) to connect the CPU Unit to a communications partner. Also, bundle all the SG lines at the Unit and at the other device and connect them together.
- Connect the shield line of the communications cable to the hood (FG) of the RS-232C connector at the Unit. The following example shows connecting SD-SG, RD-SG, RS-SG, and CS-SG for Serial Communications Mode using a twisted-pair cable using the peripheral bus.

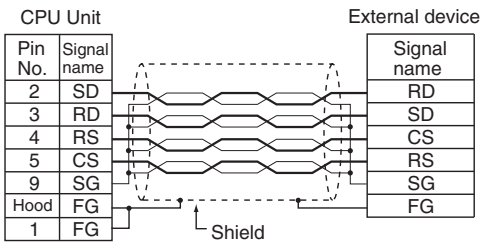

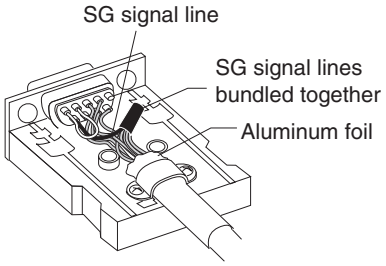

Note The hood (FG) is internally connected to the protective earth (GR) terminal on the Power Supply Unit through the CPU Rack. FG can thus be connected by connecting the protective earth (GR) terminal on the Power Supply Unit. The hood (FG) is also electrically connected to pin 1 (FG), but the connection resistance between the shield and the FG is smaller for the hood. To reduce contact resistance between the hood (FG) and the FG, connect the shield both to the hood (FG) and to pin 1 (FG).

Applicable Connector and Recommended Cables

Use the following connectors and cables when making an RS-232C cable to connect to the RS-232C port.

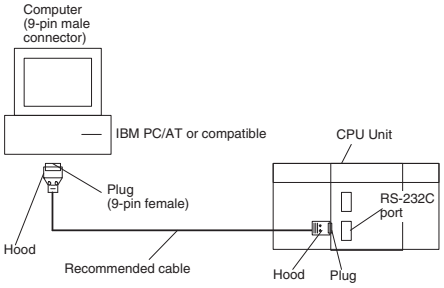

Applicable Connectors

CPU Unit Connector

Item	Model	Specifications	
Plug	XM3A-0921 or equivalent	9-pin male	Used together
Hood	XM2S-0911-E or equivalent	9-pin, millimeter screws, static-resistant	

Personal Computer Connector for IBM PC/AT Computer (9-pin Male Connector)

Item	Model	Specifications	
Plug	XM3D-0921 or equivalent	9-pin female	Used together
Hood	XM2S-0913 or equivalent	9-pin, inch screws, static-resistant	

Recommended Cables

We recommend using the following shielded twisted-pair cables to provide noise resistance.

Fujikura Ltd.: UL2464 AWG28 × 5P IFS-RVV-SB (UL product)
AWG 28 × 5P IFVV-SB (non-UL product)

Hitachi Cable, Ltd.: UL2464-SB(MA) 5P × 28AWG (7/0.127) (UL product)
CO-MA-VV-SB 5P × 28AWG (7/0.127) (non-UL product)

Precautions for Correct Use

Use the special cables provided from OMRON for all connections whenever possible. If cables are produced in-house, be sure they are wired correctly. External devices and the CPU Unit may be damaged if general purpose (e.g., computer to modem) cables are used or if wiring is not correct.

Wiring Connectors

Use the following procedures to wire connectors.

Preparing the Cable

Lengths for steps in the procedure are provided in the diagrams.

Connecting the Shield Line to the Hood (FG)

1 Cut the cable to the required length, leaving leeway for wiring and laying the cables.

2 Use a razor blade to cut away the sheath, being careful not to damage the braiding.

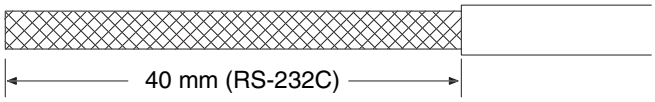

3 Use scissors to cut away all but 10 mm of the exposed braiding.

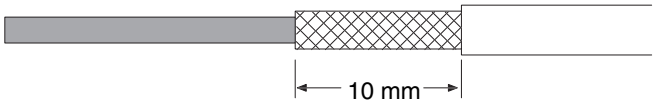

4 Use wire strippers to remove the insulation from the end of each wire.

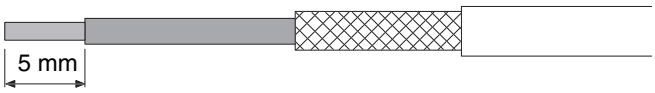

5 Fold the braiding back over the end of the sheath.

6 Wrap aluminum foil tape over the top of the braiding for one and a half turns.

Not Connecting the Shield to the Hood (FG)

1 Cut the cable to the required length, leaving leeway for wiring and laying the cables.

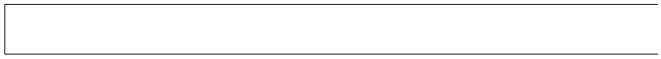

2 Use a razor blade to cut away the sheath, being careful not to damage the braiding.

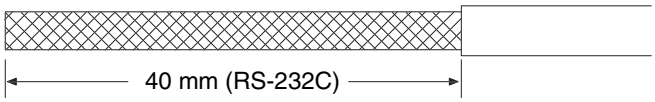

3 Use scissors to cut away the exposed braiding.

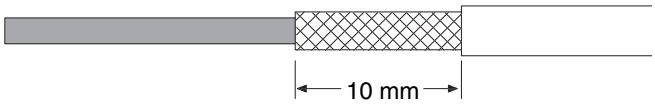

4 Use wire strippers to remove the insulation from the end of each wire.

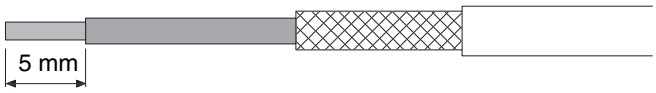

5 Wrap electrician's tape over the top and end of the cut sheath.

● Soldering

1 Place heat-shrinking tubes over all wires.

2 Pre-solder all wires and connector terminals.

3 Solder the wires.

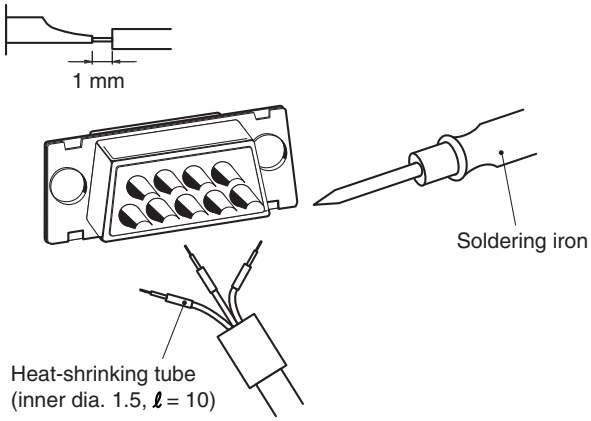

4 Move the heat-shrinking tubes onto the soldered area and shrink them into place.

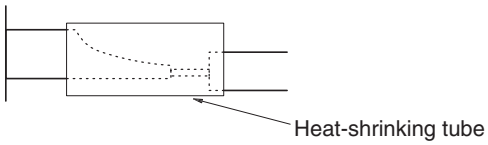

● Assembling the Hood

Assemble the connector hood as shown.

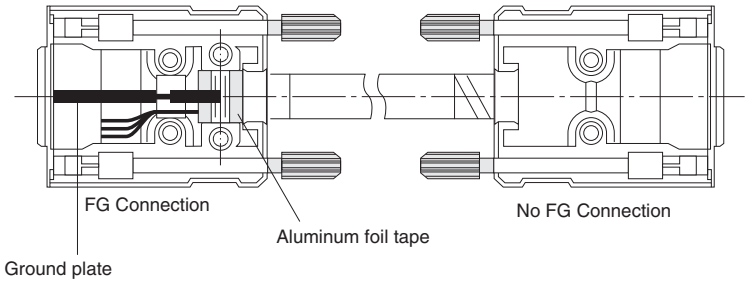

● Connections to the CPU Unit

- Always turn OFF the power supply to the PLC before connecting or disconnecting communications cables.
- Tighten the communications connector attachment screws to 0.4 N·m.

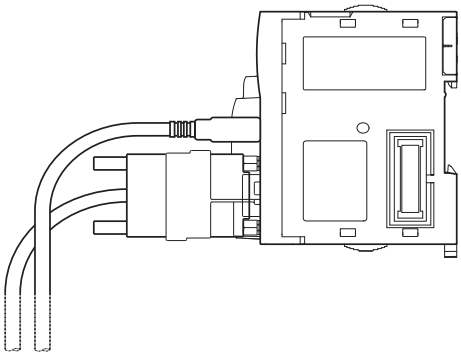

Example of Recommended RS-422A/485 Wiring

We recommend using the following wiring for RS-422A/485 to ensure transmission quality.

1 Use shielded twisted-pair cable for communications cables.

- Recommended RS-422A/485 Cable

Model	Manufacturer
CO-HC-ESV-3P × 7/0.2	Hirakawa Hewtech Corp.

2 Connect the shield on the communications cable to the FG terminal on the CJ1W-CIF11 or T-AL001. Also, ground the protective earth (GR) terminal on the CPU Unit to a resistance of 100 Ω or less.

Precautions for Correct Use

Using the CP1W-CIF11 RS-422A/485 Option Board (Not Isolated)
Use the CP1W-CIF11 only when there is no difference in electrical potential between devices. Connect the shield on the communications cable at both ends to the FG terminals on the RS-422A/485 terminal blocks to ground it. Do not allow the communications distance to exceed 50 m.

Using the CP1W-CIF12 RS-422A/485 Option Board (Isolated)
Use the NT-AL001 if there is a difference in electrical potential between devices or for long-distance communications (500 m max.).
Connect the shield on the communications cable only at the CJ1W-CIF11 to ground it. If the shield is connected at both ends of the cable when there is a difference in electrical potential, the devices may be damaged.

Connection Examples

Examples for 2-wire and 4-wire Transmission Paths

The transmission path for 2-wire and 4-wire connections are different, as shown below.

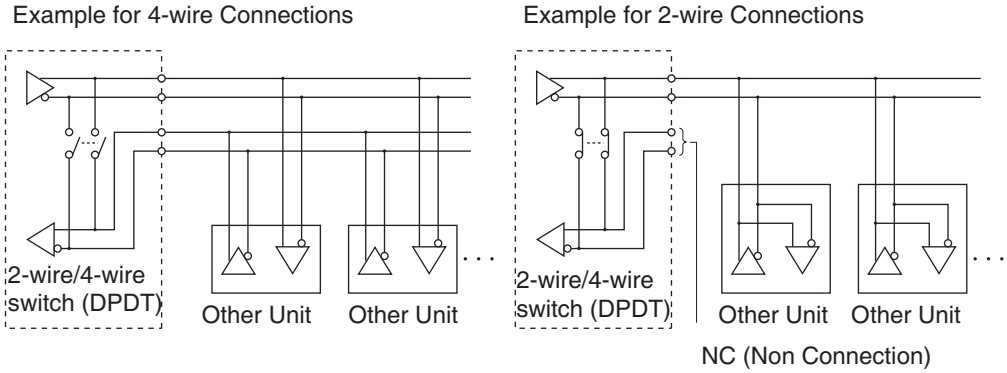

Precautions for Correct Use

- All nodes must use either 2-wire connections or 4-wire connections.
- Do not use 4-wire connections with the switch on the Board set for 2-wire connections.

Wiring Example for 1:1 Connections

- Example for 2-wire Connections

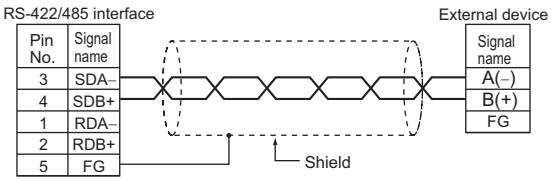

- Example for 4-wire Connections

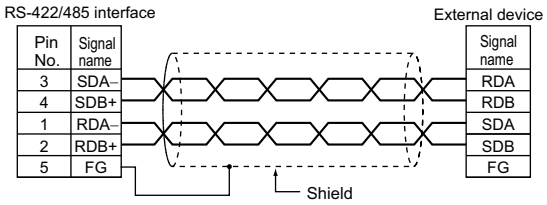

Noise Countermeasures for External Wiring

Take the following points into account when externally wiring communications cables.

- When multi-conductor signal cable is being used, do not combine I/O wires and other control wires in the same cable.
- If wiring racks are parallel, allow at least 300 mm between them.

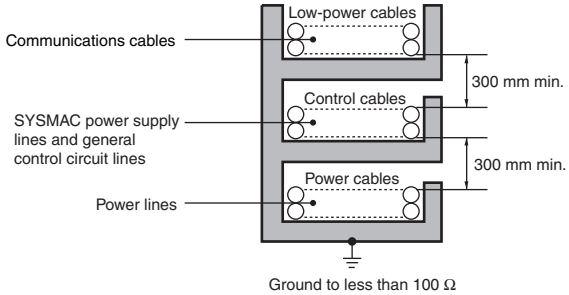

- If the I/O wiring and power cables must be placed in the same duct, they must be shielded from each other using grounded steel sheet metal plates.

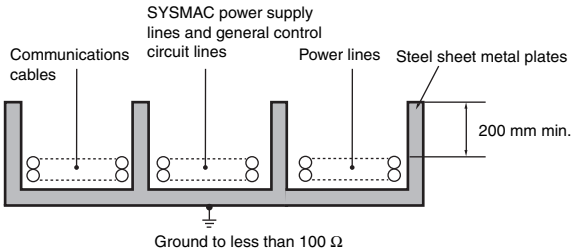

A-5 Load Short-circuit Protection and Line Disconnection Detection for Basic I/O Units

A-5-1 Load Short-circuit Protection and Line Disconnection Detection for CJ1W-OD202

This section describes the load short-circuit protection of the CJ1W-OD202 Output Units.

As shown below, normally when the output bit turns ON (OUT), the transistor will turn ON and then output current (Iout) will flow.

Normal Operation

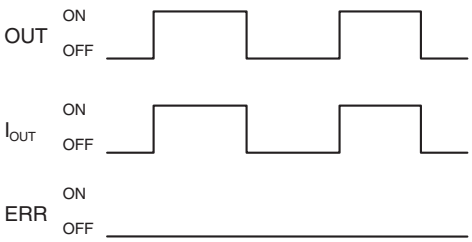

OUT:	OUTPUT instruction
I_{OUT}:	Output current
ERR:	Alarm output, ERR indicator
I_{lim}:	Short-circuit detection current
I_{OL}:	Disconnection detection current
T_j:	Junction temperature of transistor
T_{std}:	Thermal shutdown temperature
T_r:	Reset temperature

Operation for Overload or Short Circuit

If the output (Iout) is overloaded or short-circuited exceeding the detection current (Ilim), the output current (Iout) will be limited as shown in figure below. When the junction temperature (Tj) of the output transistor reaches the thermal shutdown temperature (Tstd), the output will turn OFF to protect the transistor from being damaged, and the alarm output bit will turn ON to light the ERR indicator. When the junction temperature (Tj) of the transistor drops down to the reset temperature (Tr), the ERR indicator will be automatically reset and the output current will start flowing.

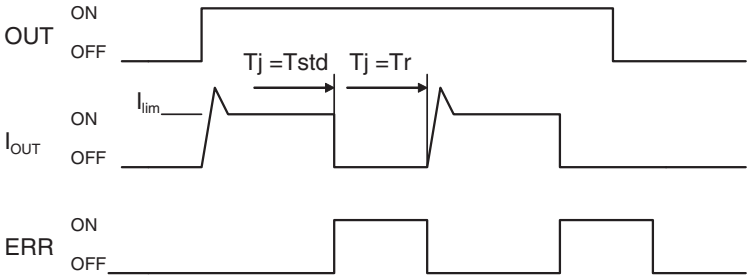

Operation for Disconnected Line with Output Current below the Line Disconnection Detection Current

If the line is disconnected and the output current (Iout) drops below the line disconnection detection current (IOL), the ERR indicator will light as shown in the following figure.

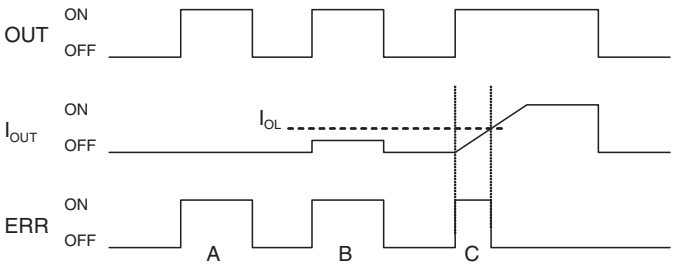

A: Load not connected or load line broken.

B: Current to load at or below line disconnection detection current.

C: Rise of current to load too slow and error detected before the disconnection detection current was reached.

When load L is connected, the ERR indicator may light and the Alarm Output Bit may turn ON for approximately 100 ms. The programming example given later in this section can be used so that an error is not detected in this case.

Operating Restrictions

Although the CJ1W-OD202 is provided with short-circuit protection, these are for protecting internal circuits against momentary short-circuiting in the load. As shown in Figure 2, the short-circuit protection is automatically released when the Tj equals to Tr. Therefore, unless the cause of short-circuit is removed, ON/OFF operations will be repeated in the output. Leaving short-circuits for any length of time will cause internal temperature rise, deterioration of elements, discoloration of the case or PCBs, etc. Therefore, observe the following restrictions.

Restrictions

If a short-circuit occurs in an external load, immediately turn OFF the corresponding output and remove the cause. The CJ1W-OD202 turns ON an alarm output bit that corresponds to the external load output number. There is an alarm output bit for every common.

When an alarm output bit turns ON, use a self-holding bit for the alarm in the user program and turn OFF the corresponding output.

The alarm output bit is allocated in the Basic I/O Unit Information Area (A050 to A069) for every Unit mounting slot.

The following table shows the correspondence between output bits and bits in the Basic I/O Unit Information Area.

Output bit		0 to 1	2 to 3	4 to 5	6 to 7
CJ1W-OD202	Mounted in even slot	0	1	2	3
	Mounted in odd slot	8	9	10	11

For example, when the CJ1W-OD202 is mounted in slot 0 on Rack 0, A50.00 will turn ON if the output 0 is short-circuited. When the CJ1W-OD202 is mounted in slot 1 of Rack 0, A50.11 will turn ON if the output 7 is short-circuited.

Programming Example

In this example, CJ1W-OD202 is mounted in slot 0 of the Rack 0.

This example shows how to turn OFF output bits CIO 0.00 immediately if the alarm output bit A50.00 turns ON and how to keep the output bits OFF until the cause is removed and the bit is reset using work bit W0.01.

Change to CIO 0.00, CIO 1.00, 0 (under TIM and at bottom right of diagram), A50.00, and W0.01.

To prevent the alarm output bit from turning ON momentarily when the load turns ON, the alarm output is not turned ON for 200 ms after the input (CIO 1.00) turns ON.

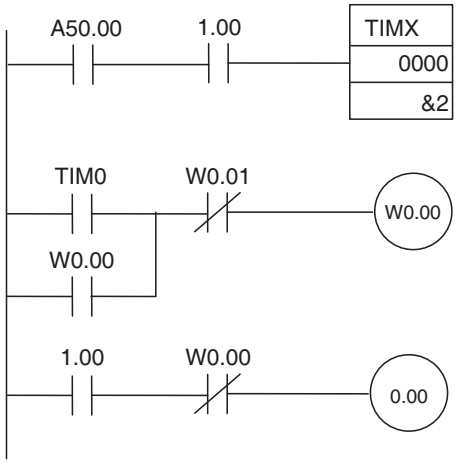

A-5-2 Load Short-circuit Protection for CJ1W-OD204/OD212/OD232/MD232

As shown below, normally when the output bit turns ON (OUT), the transistor will turn ON and then output current (Iout) will flow. If the output (Iout) is overloaded or short-circuited exceeding the detection current (Ilim), the output current (Iout) will be limited as shown in second figure below. When the junction temperature (Tj) of the output transistor reaches the thermal shutdown temperature (Tstd), the output will turn OFF to protect the transistor from being damaged, and the alarm output bit will turn ON to light the ERR indicator. When the junction temperature (Tj) of the transistor drops down to the reset temperature (Tr), the ERR indicator will be automatically reset and the output current will start flowing.

Normal Operation

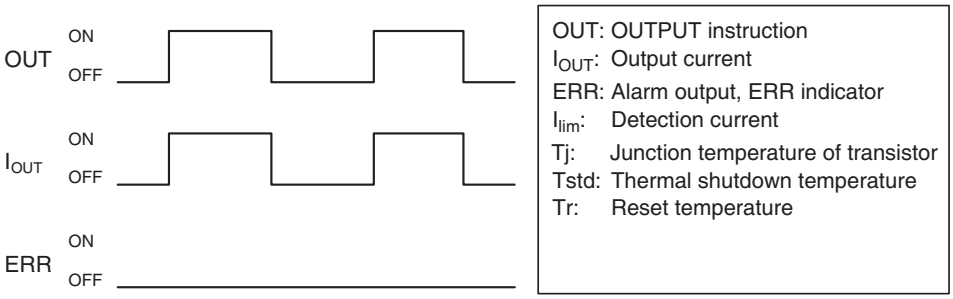

Operation for Overload or Short Circuit

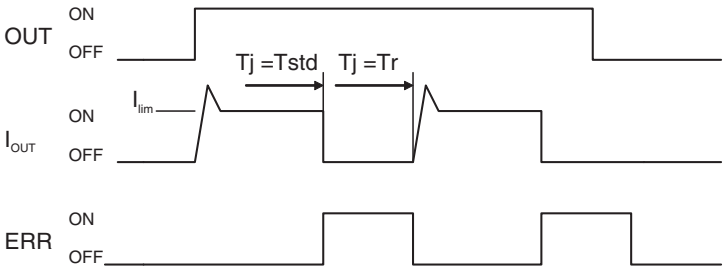

Operating Restrictions for the CJ1W-OD204/OD212/OD232/MD232

These Units are provided with short-circuit protection, these are for protecting internal circuits against momentary short-circuiting in the load. As shown in Figure 2, the short-circuit protection is automatically released when the Tj equals to Tr. Therefore, unless the cause of short-circuit is removed, ON/OFF operations will be repeated in the output. Leaving short-circuits for any length of time will cause internal temperature rise, deterioration of elements, discoloration of the case or PCBs, etc. Therefore, observe the following restrictions.

Restrictions

If a short-circuit occurs in an external load, immediately turn OFF the corresponding output and remove the cause. An alarm output bit that corresponds to the external load output number is turned ON. There is an alarm output bit for every common.

When an alarm output bit turns ON, use a self-holding bit for the alarm in the user program and turn OFF the corresponding output.

The alarm output bit is allocated in the Basic I/O Unit Information Area (A050 to A069) for every Unit mounting slot.

The following table shows the correspondence between output bits and bits in the Basic I/O Unit Information Area.

Output bit		m		m+1	m+2	m+3
		0 to 7	8 to 15	0 to 15	0 to 15	0 to 15
CJ1W-OD204	Mounted in even slot	0				
	Mounted in odd slot	8				
CJ1W-OD212	Mounted in even slot	0				
	Mounted in odd slot	8				
CJ1W-MD232	Mounted in even slot	0				
	Mounted in odd slot	8				
CJ1W-OD232	Mounted in even slot	0		1		
	Mounted in odd slot	8		9		

For example, when the CJ1W-OD212 is mounted in slot 0 on Rack 0, A50.00 will turn ON if the output 8 is short-circuited. When the CJ1W-OD232 is mounted in slot 1 of Rack 0, A50.09 will turn ON if the output m+1 is short-circuited.

Programming Example

In this example, CJ1W-OD212 is mounted in slot 0 of the Rack 0.

This example shows how to turn OFF output bits CIO 0.00 to CIO 0.07 immediately if the alarm output bit A50.00 turns ON and how to keep the output bits OFF until the cause is removed and the bit is reset using work bit W0.01.

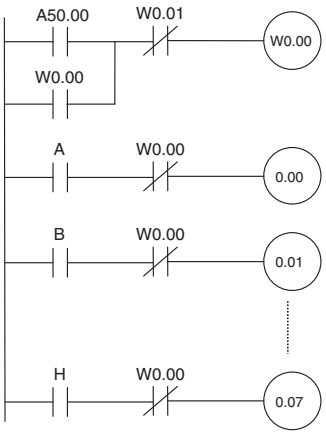

A-6 Relay Output Noise Reduction Methods

The CJ-series PLCs conforms to the Common Emission Standards (EN61000-6-4) of the EMC Directives. However, noise generated by relay output switching may not satisfy these Standards. In such a case, a noise filter must be connected to the load side or other appropriate countermeasures must be provided external to the PLC.

Countermeasures taken to satisfy the standards vary depending on the devices on the load side, wiring, configuration of machines, etc. Following are examples of countermeasures for reducing the generated noise.

Countermeasures

(Refer to EN61000-6-4 for more details.)

Countermeasures are not required if the frequency of load switching for the whole system with the PLC included is less than 5 times per minute.

Countermeasures are required if the frequency of load switching for the whole system with the PLC included is more than 5 times per minute.

Countermeasure Examples

When switching an inductive load, connect an surge protector, diodes, etc., in parallel with the load or contact as shown below.

Circuit	Current		Characteristic	Required element
	AC	DC		
CR method 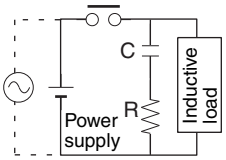 	Yes	Yes	If the load is a relay or solenoid, there is a time lag between the moment the circuit is opened and the moment the load is reset. If the supply voltage is 24 or 48 V, insert the surge protector in parallel with the load. If the supply voltage is 100 to 200 V, insert the surge protector between the contacts.	The capacitance of the capacitor must be 1 to 0.5 μF per contact current of 1 A and resistance of the resistor must be 0.5 to 1 Ω per contact voltage of 1 V. These values, however, vary with the load and the characteristics of the relay. Decide these values from experiments, and take into consideration that the capacitance suppresses spark discharge when the contacts are separated and the resistance limits the current that flows into the load when the circuit is closed again. The dielectric strength of the capacitor must be 200 to 300 V. If the circuit is an AC circuit, use a capacitor with no polarity.

Circuit	Current		Characteristic	Required element
	AC	DC		
Diode method 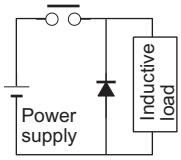	No	Yes	The diode connected in parallel with the load changes energy accumulated by the coil into a current, which then flows into the coil so that the current will be converted into Joule heat by the resistance of the inductive load. This time lag, between the moment the circuit is opened and the moment the load is reset, caused by this method is longer than that caused by the CR method.	The reversed dielectric strength value of the diode must be at least 10 times as large as the circuit voltage value. The forward current of the diode must be the same as or larger than the load current. The reversed dielectric strength value of the diode may be two to three times larger than the supply voltage if the surge protector is applied to electronic circuits with low circuit voltages.
Varistor method 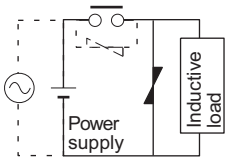	Yes	Yes	The varistor method prevents the imposition of high voltage between the contacts by using the constant voltage characteristic of the varistor. There is time lag between the moment the circuit is opened and the moment the load is reset. If the supply voltage is 24 or 48 V, insert the varistor in parallel with the load. If the supply voltage is 100 to 200 V, insert the varistor between the contacts.	---

When switching a load with a high inrush current such as an incandescent lamp, suppress the inrush current as shown below.

Countermeasure 1

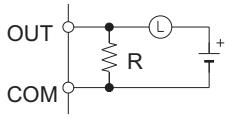

Providing a dark current of approx. one-third of the rated value through an incandescent lamp

Countermeasure 2

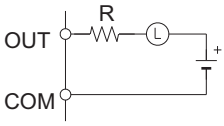

Providing a limiting resistor

A-7 Deleting Data when Disposing of the Unit

A-7-1 Target and Data to Delete

When disposing of the CPU Unit, delete the information inside the Unit using the following method to prevent information leakage. Data exists for both the CPU function and EtherNet/IP function in the CJ3M CPU Unit, and the data is deleted with a separate operation for each of them.

Target	Applicable model	Data to delete
CPU Function	CJ3M-CPU1□ CJ3M-CPU3□	• User program (including FB program area) • Parameter • Source/comment • Network symbols • I/O Memory • Operation Logs • Extended FINS Write Access Log Clear • File encryption setting and password
Built-in Ether-Net/IP function	CJ3M-CPU3□	• EtherNet/IP function settings • Operation Log • User name and password for user authentication

A-7-2 Deleting the Data of the CPU Function

To delete the data of the CPU function, the following operation needs to be performed with CX-Programmer.

- Clear All Memories
- Clear Operation Logs
- Extended FINS Write Access Log Clear

Clear All Memories

The following data can be deleted by clearing all memory.

- User program (including FB program area)
- Parameter
- Source/comment
- Network Symbols
- I/O Memory
- File encryption setting and password

Procedure

1 Select Clear All Memory from the PLC Menu.

2 Select the *Execute Initialization* Option and *Clear Error Log* Check Box, and click the OK Button.

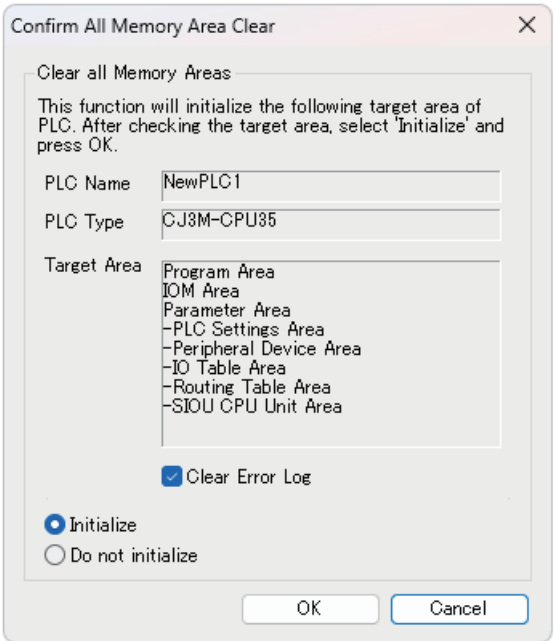

Clear Operation Logs

To clear the operation log, the following procedure needs to be performed.

Procedure

1 Set the DIP switches as follows:

SW1	SW2	SW3	SW4	SW5	SW6	SW7	SW8
- (*)	- (*)	OFF	ON	- (*)	- (*)	- (*)	ON

* The status of "-" is no need to make changes.

2 Connect the CX-Programmer and PLC online.

3 Select *PLC - Edit - Operation Log*.

The operation log window is displayed.

4 Click the **Clear All** Button.

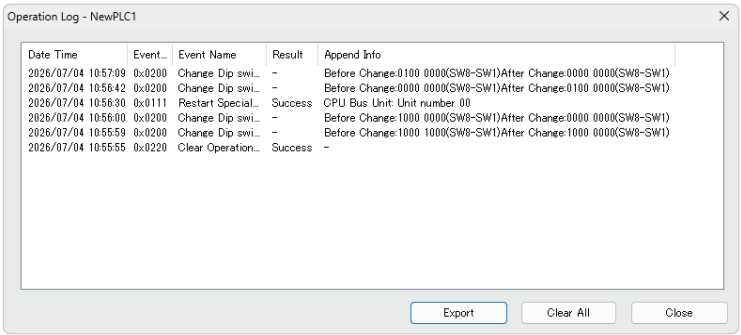

Extended FINS Write Access Log Clear

To clear the expanded FINS write access log, the following procedure needs to be performed.

Procedure

1 Set the DIP switches as follows:

SW1	SW2	SW3	SW4	SW5	SW6	SW7	SW8
- (*)	- (*)	OFF	ON	- (*)	- (*)	- (*)	ON

* The status of "-" is no need to make changes.

2 Connect the CX-Programmer and PLC online.

3 Select *PLC - Edit - Extended FINS Write Access Log*.

The FINS access log window is displayed.

4 Click the **Clear All** Button.

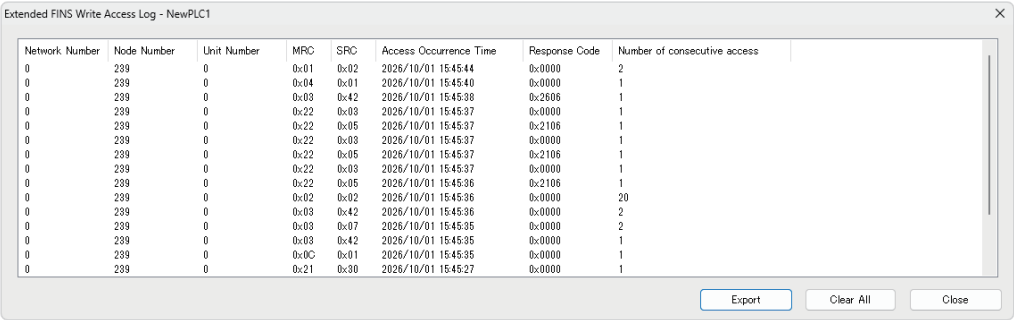

Network Number	Node Number	Unit Number	MRC	SRC	Access Occurrence Time	Response Code	Number of consecutive access
0	239	0	0x01	0x02	2026/10/01 15:45:44	0x0000	2
0	239	0	0x04	0x01	2026/10/01 15:45:40	0x0000	1
0	239	0	0x03	0x42	2026/10/01 15:45:38	0x2606	1
0	239	0	0x22	0x03	2026/10/01 15:45:37	0x0000	1
0	239	0	0x22	0x05	2026/10/01 15:45:37	0x2106	1
0	239	0	0x22	0x03	2026/10/01 15:45:37	0x0000	1
0	239	0	0x22	0x05	2026/10/01 15:45:37	0x2106	1
0	239	0	0x22	0x03	2026/10/01 15:45:37	0x0000	1
0	239	0	0x22	0x05	2026/10/01 15:45:36	0x2106	1
0	239	0	0x02	0x02	2026/10/01 15:45:36	0x0000	20
0	239	0	0x03	0x42	2026/10/01 15:45:36	0x0000	2
0	239	0	0x03	0x07	2026/10/01 15:45:35	0x0000	2
0	239	0	0x03	0x42	2026/10/01 15:45:35	0x0000	1
0	239	0	0x0C	0x01	2026/10/01 15:45:35	0x0000	1
0	239	0	0x21	0x30	2026/10/01 15:45:27	0x0000	1

A-7-3 Deleting the Data of the Built-in EtherNet/IP Function

The data of the built-in EtherNet/IP function needs to be initialized to the factory default state.

There is the following way to initialize the data to the default state. This is the method recommended from a security perspective.

1 Connect CX-Programmer to the USB port or serial port of the CJ3M CPU Unit.

2 Right-click CJ3M-EIP21S in the I/O Table Dialog Box and select *Edit - Unit Setup*.

3 Click the **Restart** Button in the Edit Parameters Dialog Box.

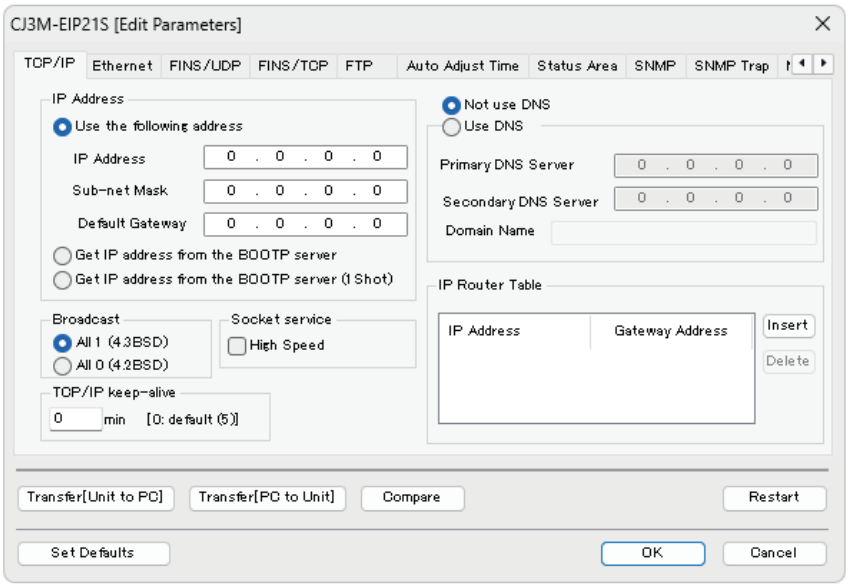

4 Select **Return to out-of-box configuration, and then emulate cycling power.** and click the **OK** Button.

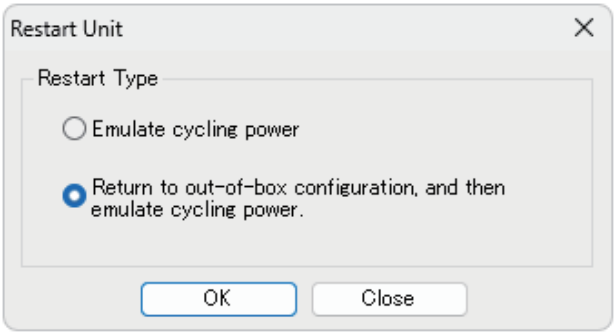

A-8 B7A Interface Unit

A-8-1 Overview

The B7A is a 1:1 transmission path that does not require a master. A total of 16 signals are transmitted using a two-conductor or three-conductor VCTF cable (maximum length: 500 m). The CJ1W-B7A□□B7A Interface Unit is a CJ-series Basic I/O Unit that exchanges up to 64 points of I/O data mainly with B7A Link Terminals using a B7A transmission path.

A-8-2 System Configuration

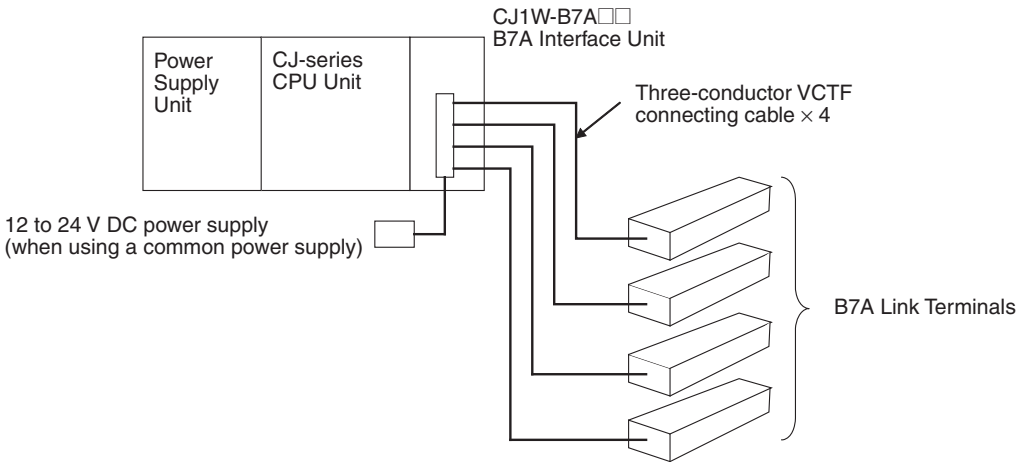

A-8-3 Models

B7A Interface Unit	Specifications	I/O words allocated to Unit	Connectable B7A Link Terminals (See note 1.)
CJ1W-B7A14	64 inputs (four B7A ports)	4 input words	Inputs: Four 16-point Input Terminals, two 32-point Input Terminals, or two 16-point Input Terminals and one 32-point Input Terminal
CJ1W-B7A04	64 outputs (four B7A ports)	4 output words	Outputs: Four 16-point Output Terminals or two 32-point Output Terminals
CJ1W-B7A22	32 inputs, 32 outputs (four B7A ports)	2 input words and 2 output words	Inputs: Two 16-point Input Terminals or one 32-point Input Terminal Outputs: Two 16-point Output Terminals or one 32-point Output Terminal or Two Mixed I/O Terminals (16 inputs/16 outputs)

Note 1 A 10-point B7A Link Terminal cannot be connected to a B7A Interface Unit. B7A Interface Units can be connected together.

A-8-4 B7A Communications Specifications

Item	Specifications		
Transmission method	One-way time-sharing multiplex transmissions		
Transmission delay (communications delay on transmission path)	High-speed	3 ms typical, 5 ms max.	
	Standard	19.2 ms typical, 31 ms max.	
Transmission points	CJ1W-B7A14	64 inputs (4 ports)	
	CJ1W-B7A04	64 outputs (4 ports)	
	CJ1W-B7A22	32 inputs (2 ports), 32 outputs (2 ports)	
External power supply voltage (See note 3.)	12 to 24 V DC (allowable voltage range: 10.8 to 26.4 V)		
External supply current (See note 4.)	CJ1W-B7A14	40 mA min.	
	CJ1W-B7A04	150 mA min.	
	CJ1W-B7A22	80 mA min.	
Minimum input time (See note 5.)	High-speed	16 ms	
	Standard	2.4 ms	
Transmission distance	High-speed	Power supply on one side (common power supply)	10 m max.
			50 m max. (with shielded cable)
		Power supply on both sides (separate power supplies)	10 m max.
			100 m max. (with shielded cable)
	Standard	Power supply on one side (common power supply)	100 m max.
		Power supply on both sides (separate power supplies)	500 m max.
	One-way time-sharing multiplex transmissions		
	High-speed	3 ms typical, 5 ms max.	
Cables	VCTF, 0.75 mm^2, 3 conductors (power supply on one side (common power supply)) VCTF, 0.75 mm^2, 2 conductors (power supply on both sides (separate power supplies)) Shielded cable, 0.75 mm^2, 3 conductors (power supply on one side (common power supply)) Shielded cable, 0.75 mm^2, 2 conductors (power supply on both sides (separate power supplies))		

Note 1 When separate power supplies are used, the B7A Interface Unit and B7A Link Terminal are supplied by separate external power supplies.

2 When a common power supply is used, the B7A Interface Unit and B7A Link Terminal are supplied by the same external power supply.

3 We recommend OMRON S8□□-series Power Supply Units for the external power supplies.

4 The capacity of the external supply current does not include the capacity required by the B7A Link Terminal.

5 The minimum input time is the minimum time required by the B7A Interface Unit to read the input signals from the CPU Unit.

A-8-5 Common Specifications

Item	Specifications
Applicable PLCs	CJ Series
Unit classification	CJ-series Basic I/O Unit
Transmission delay	Standard (19.2 ms typical) or high-speed (3 ms typical), switchable (Switchable by using the setting switch on the front panel. Settings are read when power is turned ON or Unit is restarted.) Factory setting: Standard (19.2 ms typical) **Note** A transmission error will occur if B7A Link Terminals with different transmission delay times are connected to each other.
Transmission error input status processing	HOLD (The bit status from immediately before the transmission error is held.)
Settings	Front panel Setting switch: Standard (19.2 ms typical) or high-speed (3 ms typical), switchable
Indicators	5 LED indicators: RUN (B7A operating status), ERR1 (port 1 communications error), ERR2 (port 2 communications error), ERR3 (port 3 communications error), ERR4 (port 4 communications error)
Front panel connection	Connector with clamps
Current consumption	5 V DC: 70 mA max. (supplied from Power Supply Unit)
Weight	80 g max.

A-8-6 I/O Memory Allocations

The B7A Interface Unit is a Basic I/O Unit. Each Unit is allocated four words in the I/O Area (which starts at CIO 0000). The words are allocated according to the mounting position of the Unit as shown in the following table.

Port	Input/output			Allocated word (n: First word allocated to Unit)
	CJ1W-B7A14	CJ1W-B7A04	CJ1W-B7A22	
1	Input	Output	Output	Word n
2	Input	Output	Output	Word n+1
3	Input	Output	Input	Word n+2
4	Input	Output	Input	Word n+3

A-8-7 Transmission Error Processing

Input Ports

The B7A Interface Unit detects transmission errors at the input ports. When a transmission error is detected at an input port, the corresponding indicator and Transmission Error Flag turn ON.

Indicators

When a transmission occurs at an input port, indicators ERR1 to ERR4 on the front panel will turn ON according to the port where the error occurred.

Port where error occurred	LED error indicators		
	CJ1W-B7A14	CJ1W-B7A04	CJ1W-B7A22
Port 1	ERR1	---	---
Port 2	ERR2	---	---
Port 3	ERR3	---	ERR1
Port 4	ERR4	---	ERR2

Transmission Error Flag

The corresponding Transmission Error Flag in the first word allocated to the Unit in the CPU Unit's Auxiliary Area will turn ON for each input port, as shown in the following table. Words A050 to A080 are allocated to Basic I/O Unit as information words.

Example: Rack 0, Slot 0

Port where error occurred	Transmission Error Flag		
	CJ1W-B7A14	CJ1W-B7A04	CJ1W-B7A22
Port 1	A05000	---	---
Port 2	A05001	---	---
Port 3	A05002	---	A05000
Port 4	A05003	---	A05001

Example: Rack 0, Slot 1

Port where error occurred	Transmission Error Flag		
	CJ1W-B7A14	CJ1W-B7A04	CJ1W-B7A22
Port 1	A05008	---	---
Port 2	A05009	---	---
Port 3	A05010	---	A05008
Port 4	A05011	---	A05009

Transmission Error Input Status Processing

If an error occurs at an input port, the Unit will hold the status of the input bit in the CPU Unit's I/O memory from immediately before the transmission error occurred. When transmission returns to normal, the signals that have been normally received will be input to the input bit.

Output Ports

The B7A Interface Unit does not detect transmission errors at output ports. Detect output port transmission errors at the B7A Link Terminal that is connected to the B7A Interface Unit.

A-8-8 Parts and Names

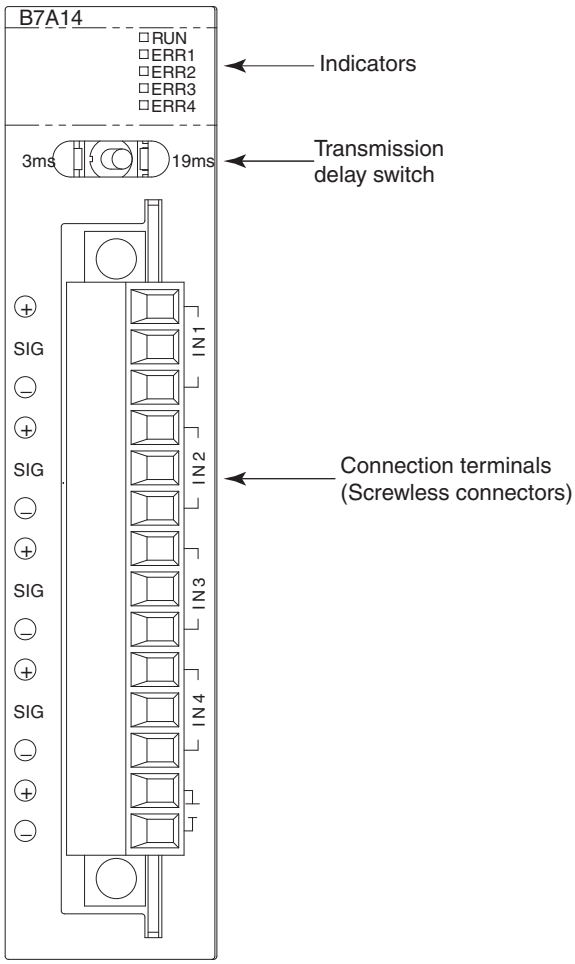

Indicators

- **CJ1W-B7A14**

Display	Name	Color	Status	Condition
RUN	B7A operating status	Green	ON	The B7A Unit is operating.
			OFF	The B7A Unit is stopped.
ERR1	Port 1 transmission error	Red	ON	A transmission error has occurred at port 1 of the B7A Unit.
			OFF	The Unit is operating normally.
ERR2	Port 2 transmission error	Red	ON	A transmission error has occurred at port 2 of the B7A Unit.
			OFF	The Unit is operating normally.

Display	Name	Color	Status	Condition
ERR3	Port 3 transmission error	Red	ON	A transmission error has occurred at port 3 of the B7A Unit.
			OFF	The Unit is operating normally.
ERR4	Port 4 transmission error	Red	ON	A transmission error has occurred at port 4 of the B7A Unit.
			OFF	The Unit is operating normally.

● CJ1W-B7A04

Display	Name	Color	Status	Condition
RUN	B7A operating status	Green	ON	The B7A Unit is operating.
			OFF	The B7A Unit is stopped.

● CJ1W-B7A22

Display	Name	Color	Status	Condition
RUN	B7A operating status	Green	ON	The B7A Unit is operating.
			OFF	The B7A Unit is stopped.
ERR1	Port 3 transmission error	Red	ON	A transmission error has occurred at port 3 of the B7A Unit.
			OFF	The Unit is operating normally.
ERR2	Port 4 transmission error	Red	ON	A transmission error has occurred at port 4 of the B7A Unit.
			OFF	The Unit is operating normally.

Transmission Delay Switch

Name	Function	Factory setting
Transmission delay switch	The same baud rate is set for all ports using this one switch. Right: Standard (19.2 ms typical) Left: High-speed (3 ms typical)	Standard

Note The switch setting is read when the power is turned ON or the Unit is restarted. If the switch setting is changed after turning ON the power or restarting the Unit, the setting will not be read.

Terminal Arrangement

Terminal	Name	Function	Word	Appearance
A	Port 1 power supply: V1	Connect to the + terminal of the B7A Link Terminal to be connected to port 1 (only when using a common power supply).	n	Connector with clamps 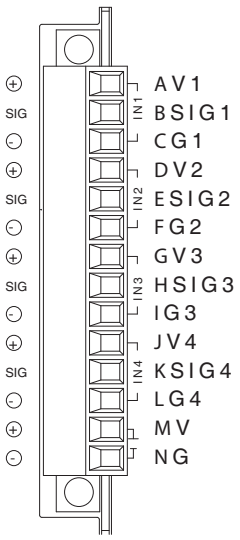
B	Port 1 signal: SIG1	Connect to the SIG terminal of the B7A Link Terminal to be connected to port 1.		
C	Port 1 ground: G1	Connect to the – terminal of the B7A Link Terminal to be connected to port 1.		
D	Port 2 power supply: V2	Connect to the + terminal of the B7A Link Terminal to be connected to port 2 (only when using a common power supply).	n+1	
E	Port 2 signal: SIG2	Connect to the SIG terminal of the B7A Link Terminal to be connected to port 2.		
F	Port 2 ground: G2	Connect to the – terminal of the B7A Link Terminal to be connected to port 2.		
G	Port 3 power supply: V3	Connect to the + terminal of the B7A Link Terminal to be connected to port 3 (only when using a common power supply).	n+2	
H	Port 3 signal: SIG3	Connect to the SIG terminal of the B7A Link Terminal to be connected to port 3.		
I	Port 3 ground: G3	Connect to the – terminal of the B7A Link Terminal to be connected to port 3.		
J	Port 4 power supply: V4	Connect to the + terminal of the B7A Link Terminal to be connected to port 4 (only when using a common power supply).	n+3	
K	Port 4 signal: SIG4	Connect to the SIG terminal of the B7A Link Terminal to be connected to port 4.		
L	Port 4 ground: G4	Connect to the – terminal of the B7A Link Terminal to be connected to port 4.		
M	+ power supply: V	Connect to the + terminal of the external power supply.	---	
N	– power supply: G	Connect to the – terminal of the external power supply.		

Note Terminals V1, V2, V3, V4, and V are connected internally in the Unit, and terminals G1, G2, G3, G4, and G are connected internally in the Unit.

A-8-9 Preparing and Connecting Cables

Use the following procedure to prepare and connect the cables.

Note Always turn OFF the Unit's power supply and communications power supply before attaching or removing connectors.

1 Preparing the Covering

First, use the following procedure to prepare the cable.

(1) Strip approximately 10 mm of the sheath covering the signal lines to match the crimp terminals. Next, twist together the wires of each signal line firmly.

(2) Use vinyl tape or a heat-shrink tube to cover the end of the VCTF cable sheath, as shown in the following diagram.

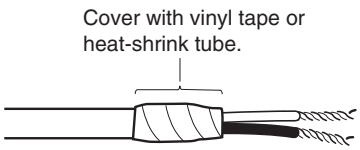

2 Preparing Cable Signal Lines

Attach the crimp terminals to the cable's signal lines.

(1) Attaching Crimp Terminals

Insert the end of the cable into the terminal and crimp.

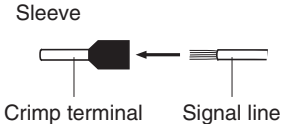

Recommended Crimp Terminals for Cables

Model	Manufacturer
AI-series AI0.75-8 (Product code: 3200519)	PHOENIX CONTACT
H0.75/14 (Product code: 046290)	Nihon Weidmuller Co., Ltd.
TE-0.75	NICHIFU Co., Ltd.

Precautions for Safe Use

Always use the specified crimp tool to attach the crimp terminals. If a crimp tool is not used, the cable will not be crimped properly, which may cause the cable to become detached from the terminal.

Inquires

- PHOENIX CONTACT
- Nihon Weidmuller Co., Ltd.
- NICHIFU Co., Ltd.

3 Insulate the stripped end of each signal line with vinyl tape or heat-shrink tubing.

(1) Connecting Cables

Use the following procedure to connect cables to the connection terminals.

Orient the connector properly, and then insert the signal lines fully into the back of each terminal hole in the connector, as shown in the following diagram. (The signal lines are secured in this way, without requiring the use of a tool.) If crimp terminals are not used on the signal lines, use a small flat-blade screwdriver to press down on the orange tab to insert the signal lines.

- Power Supply on One Side (Common Power Supply)

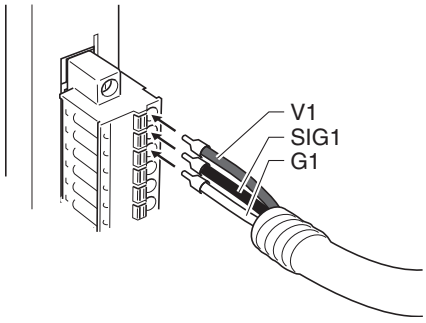

- Power Supply on Both Sides (Separate Power Supplies)

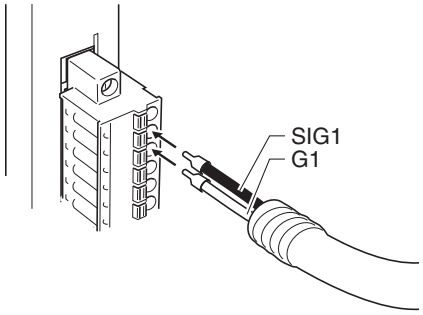

Note To remove the signal lines from the connector, press down on the orange tab while pulling out the signal line, as shown in the following diagram.

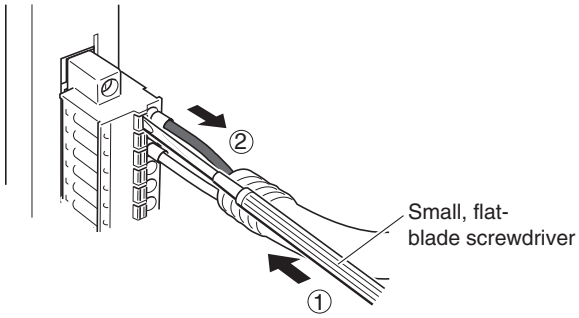

Note To remove the connector from the Unit, fully unscrew the set screws from both sides of the connector, and then remove the connector. Forcibly pulling the connector while the set screws are still attached may damage the connector.

A-8-10 Connection Diagrams

Note 1 Confirm that terminals are connected correctly. If connections are incorrect, the internal components of the B7A Interface Unit and B7A Link Terminal may be damaged.

2 Route the signal lines in separate ducts both inside and outside the control panel to isolate them from power lines.

3 Connect cables at a distance that is within the range given in the specifications.

4 Always turn OFF the power to the CPU Unit and all other Units before connecting the communications cables.

5 Always lay communications cables within ducts.

Standard Mode

● Power Supply on One Side (Common Power Supply)

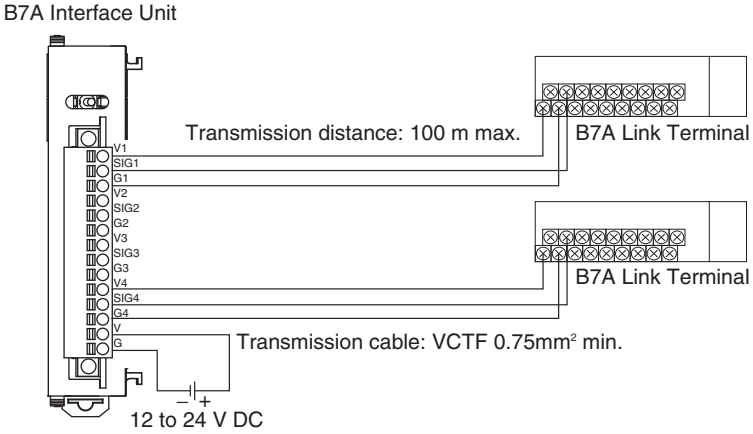

● Power Supply on Both Sides (Separate Power Supplies)

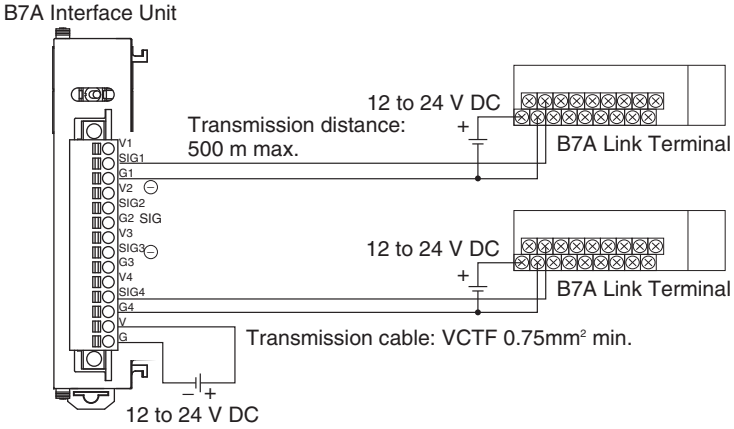

High-speed Mode

Note If shielded cable is not used, the maximum transmission distance is 10 m regardless of whether a common or separate power supplies are used. (Use VCTF cable of 0.75 mm^2 or higher.)

● Power Supply on One Side (Common Power Supply)

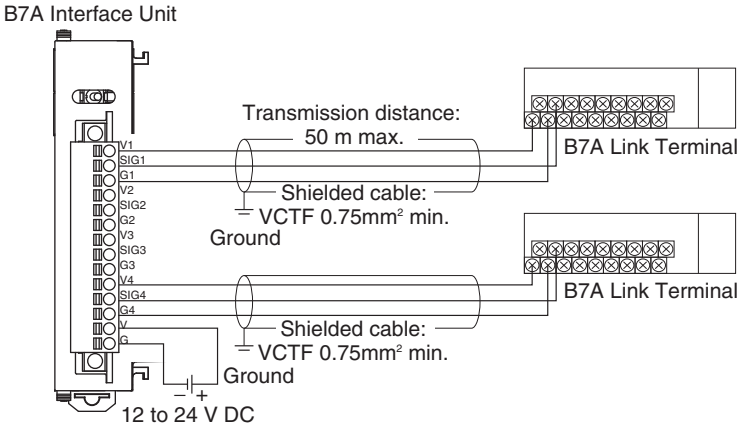

● Power Supply on Both Sides (Separate Power Supplies)

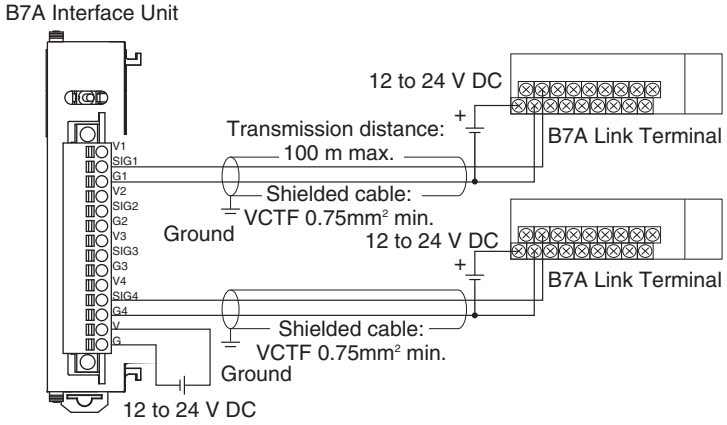

A-9 Installing the USB Driver

The USB driver must be installed in the computer to connect the PLC to the computer using the USB port.

Procedure for Installing the USB Driver

This section describes the procedure for connecting a computer to the peripheral (USB) port on the CJ3 CPU Unit for the first time. This example assumes that the Support Software is already installed.

The installation procedure given here is for CX-One version 4.0 (CX-Programmer version 9.1).

● Windows 10/11

1 Turn ON the power supply to the PLC and connect the peripheral USB port on the PLC to the personal computer using a USB cable. The USB driver will be automatically installed when the cable is connected.

Note If the software is not automatically installed, refer to Installing a Specified USB Driver later in this section.

Installing a Specified USB Driver

If the USB driver cannot be installed automatically, use the following procedure to install it.

● Windows 10/11

1 Turn ON the power supply to the PLC and connect the peripheral USB port on the PLC to the personal computer using a USB cable.

2 The following dialog box will be displayed. Select ***Locate and install driver software (Recommended)***.

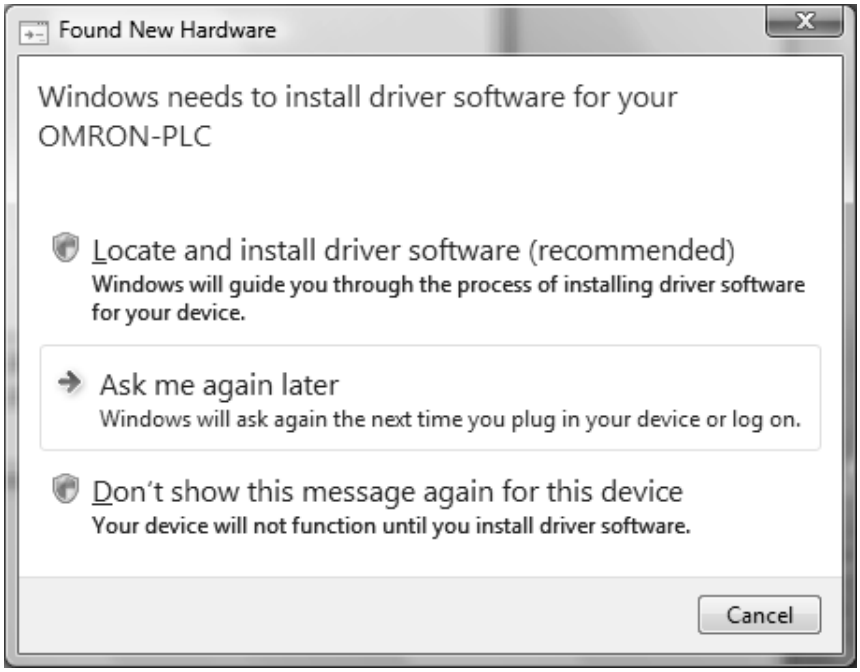

3 The following dialog box will be displayed. Select ***I don't have the disc. Show me other options***.

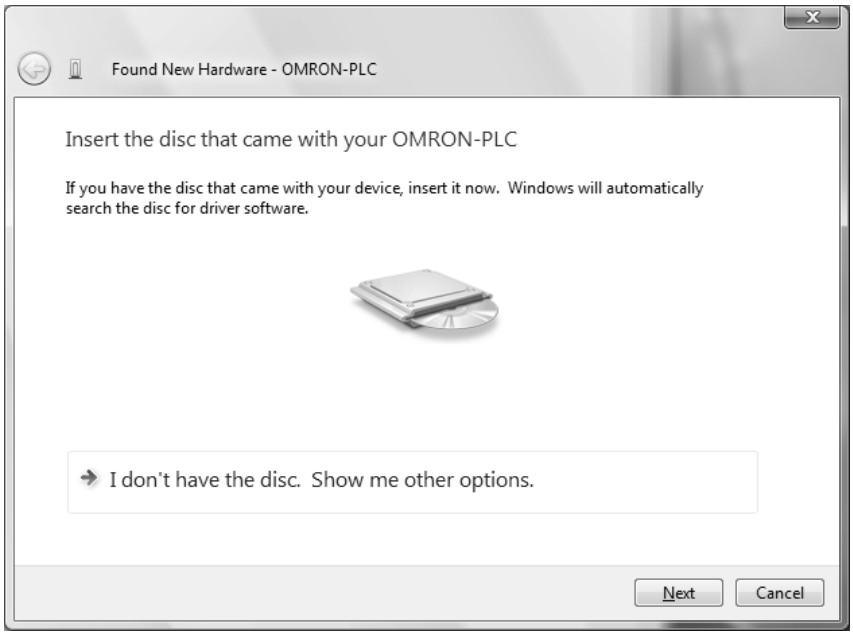

4 The following dialog box will be displayed. Click the **Browse** Button, specify the following location, and then click the **Next** Button.

For 32-bit Windows: C:\Program Files (x86)\OMRON\CX-Server\USB\10\32bit

For 64-bit Windows: C:\Program Files (x86)\OMRON\CX-Server\USB\10\64bit

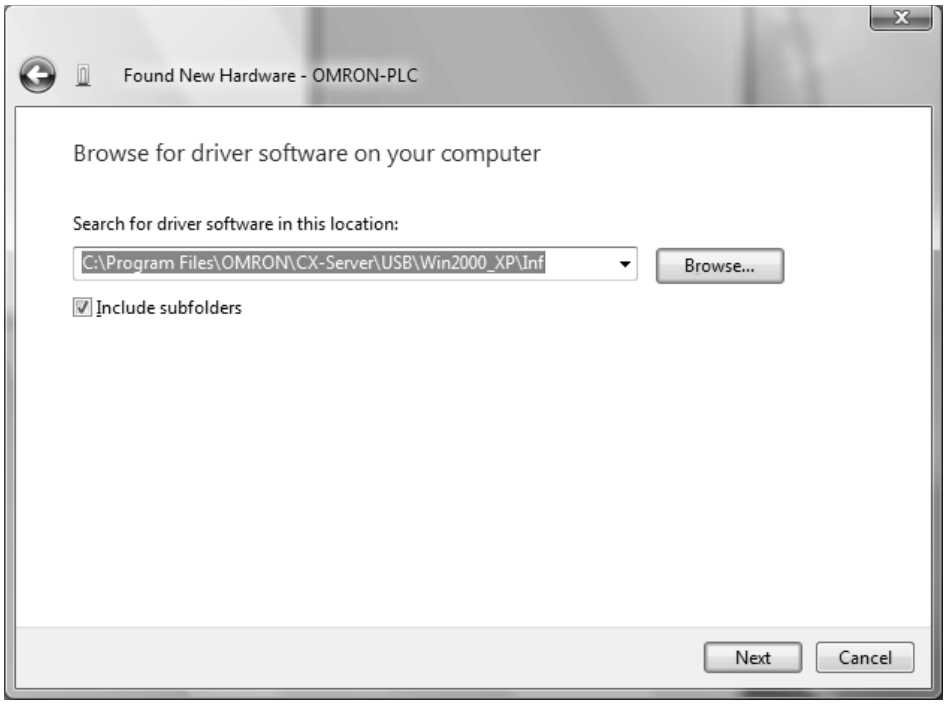

5 Ignore the following dialog box if it is displayed and select ***Install this driver software anyway***.

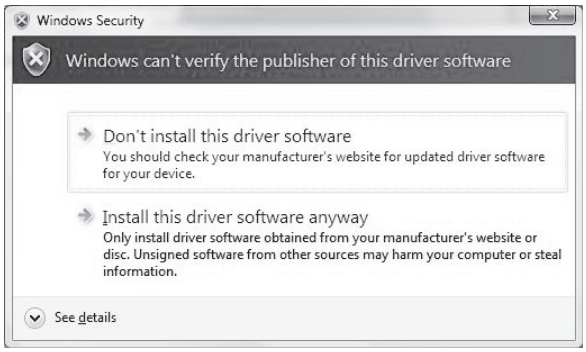

6 The following dialog box will be displayed when the driver software has been installed successfully.

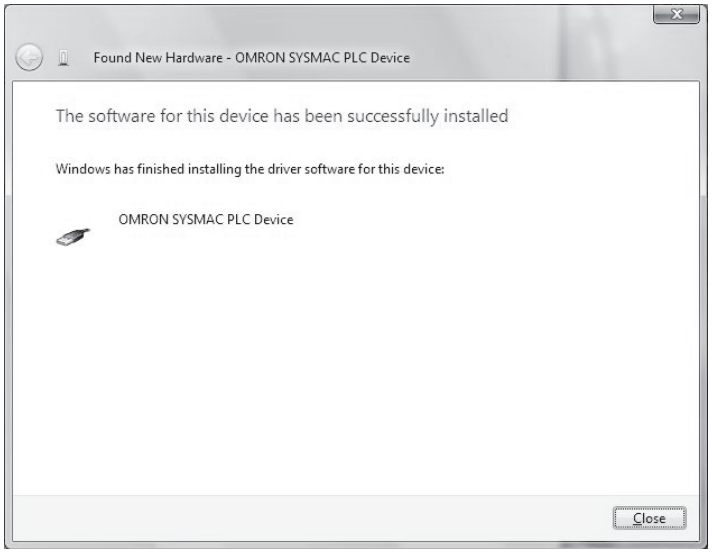

Checking after Installation

1 Display the Device Manager at the computer.

2 Click *USB (Universal Serial Bus) Controllers*, and confirm that *OMRON SYSMAC PLC Device* is displayed.

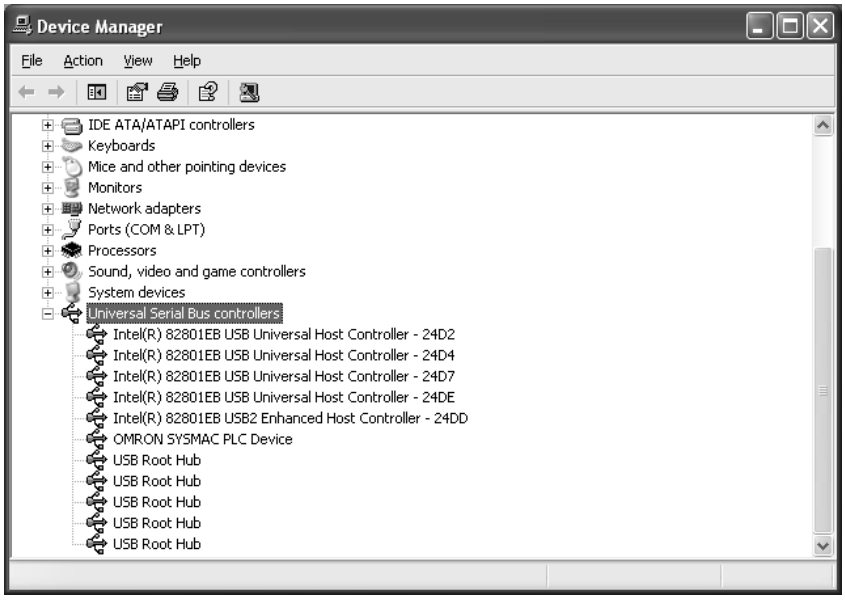

Re-installing the USB Driver

If the USB driver installation fails for some reason or is cancelled in progress, the USB driver must be reinstalled.

● Checking USB Driver Status

1 Display the Device Manager on the computer.

2 If the *OMRON-PLC* is displayed under *Universal Serial Bus controllers*, installation of the USB driver software failed.

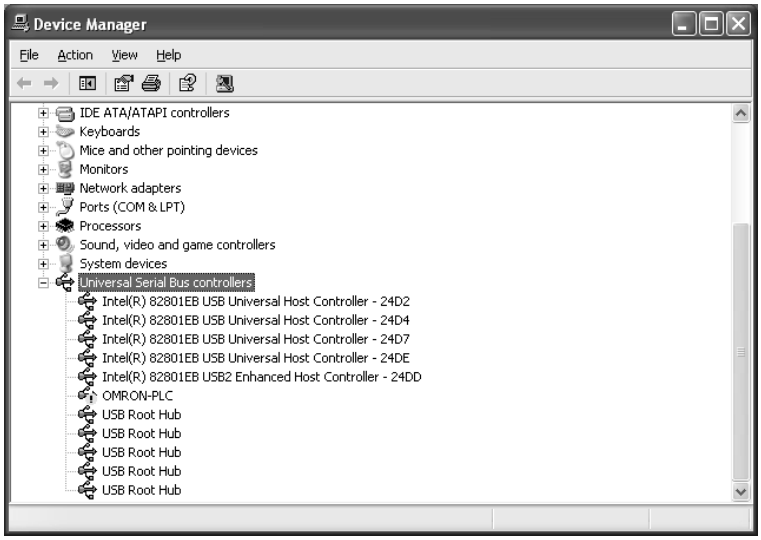

Reinstalling the USB Driver

1 Right-click *OMRON-PLC* under *Universal Serial Bus controllers* and select **Properties**. The properties will be displayed.

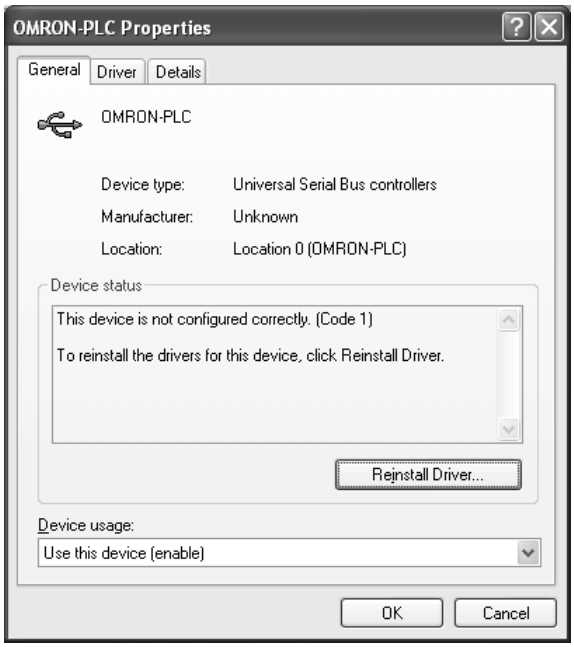

2 Click the **Reinstall Driver** Button. The Hardware Update Wizard Dialog Box will be displayed. Install the driver software using the procedure described in *Installing the USB Driver*.

Index

A

alarm output 3-24

B

Basic I/O Units 2-12
Basic I/O Units specifications A-3
battery replacement procedure 7-6
battery service life and replacement periods 7-5

C

calculating power consumption 2-22
calculating unit current consumption 2-20
checking errors 6-2
Connector-Terminal Block Conversion Unit 5-32, A-64
CPU Bus Units 2-18
CPU error 6-10
CPU error (WDT error) 6-6
CPU Rack 2-3
CPU reset 6-9
CPU reset error 6-6
CPU standby error 6-6, 6-8
current consumption 2-4, 2-5, 2-9, 2-12

D

dimensions 5-8, A-83
DIN Track 2-6, 5-14
DIP switch 3-2, 3-4

E

End Cover 2-3
error log information 6-3
EtherNet/IP port 2-6, 4-10
Expansion Rack 2-8

F

fail-safe circuit 5-2
fatal errors 6-6, A-91
- cycle time exceeded error 6-6, 6-12, A-92
- FALS(007) error 6-6, A-95, A-98
- I./O setting error A-93, A-96
- I/O bus error 6-6, 6-13, A-92
- I/O setting error 6-6, 6-15
- Memory Card transfer error 6-6, A-95, A-98
- memory error 6-6, 6-16, A-95, A-98
- program error 6-6, A-94, A-95, A-97
- too many I/O points 6-6
- too many I/O points error A-93, A-96
- Unit/Rack number duplication error A-94, A-96
- version error 6-6, A-95, A-98

G

grounding 5-49

I

I/O Relay Terminal 5-32
I/O Relay Terminals connection patterns A-65
I/O table verification 6-5
indicators 3-3, 6-2
Interrupt Input Unit 3-26
IP address 3-12

L

line disconnection detection A-121

M

Memory Card 3-2, 3-13
Memory Card connector 3-2
Memory Card power supply switch 3-2

N

node address 3-12
non-fatal errors 6-6, A-99
- backup memory error 6-6, A-100
- Basic I/O error 6-6, A-100
- basic I/O error 6-18
- battery error 6-6, 6-19, A-100
- CPU Bus Unit error 6-6, 6-20, A-100
- CPU Bus Unit setting error 6-6, A-100
- duplicated refreshing error 6-6, A-100
- FAL(006) error 6-6, A-101
- PLC Setup error 6-6, A-100
- Special I/O Unit error 6-6, 6-21, A-100
- Special I/O Unit setting error 6-6, A-100
- tag memory error 6-6, A-100

P

periodic inspection 7-2
peripheral (USB) port 3-2, 4-6, 6-11
PLC Backup Tool 8-2
Power supply error 6-6
power supply error 6-7
Power Supply Unit replacement time 7-8
Power Supply Units 3-19
program capacity 2-4
Pulse I/O Module 3-16, A-89

R

replacement notification 7-8
rotary switch 3-11
RS-232C 6-11

RS-232C interface A-102
RS-232C port communications error 6-6
RUN output 3-24

S

serial port 2-6, 3-2
serial port (RS-232C) 4-8
seven-segment display 3-10, 6-24
short-circuit protection A-121
simple backup 8-9
Special I/O Units 2-15
Support Software 4-2

U

unit address 8-18
USB driver A-142
USB port 2-6, 4-6
USB port communications error 6-6

W

weight 2-4, 2-5, 2-12
wiring duct 5-7

Revision History

A manual revision code appears as a suffix to the catalog number on the front cover of the manual.

Cat. No. W664-E1-01

Revision code

The following table outlines the changes made to the manual during each revision. Page numbers refer to the previous version.

Revision code	Date	Revised content
01	October 2026	Original production

OMRON Corporation **Industrial Automation Company**

Kyoto, JAPAN **Contact : www.ia.omron.com**

Regional Headquarters

OMRON EUROPE B.V.
Wegalaan 67-69, 2132 JD Hoofddorp
The Netherlands
Tel: (31) 2356-81-300 Fax: (31) 2356-81-388

OMRON ELECTRONICS LLC
2895 Greenspoint Parkway, Suite 200
Hoffman Estates, IL 60169 U.S.A.
Tel: (1) 847-843-7900 Fax: (1) 847-843-7787

OMRON ASIA PACIFIC PTE. LTD.
438B Alexandra Road, #08-01/02 Alexandra
Technopark, Singapore 119968
Tel: (65) 6835-3011 Fax: (65) 6835-3011

OMRON (CHINA) CO., LTD.
Room 2211, Bank of China Tower,
200 Yin Cheng Zhong Road,
PuDong New Area, Shanghai, 200120, China
Tel: (86) 21-6023-0333 Fax: (86) 21-5037-2388

Authorized Distributor:

©OMRON Corporation 2026 All Rights Reserved.
In the interest of product improvement,
specifications are subject to change without notice.

Cat. No. W664-E1-01 1026