Cat. No. Z174-E1-02A

SYSMAC CS/CJ Series
CS1W-V600C11
CS1W-V600C12
CJ1W-V600C11
CJ1W-V600C12

ID Sensor Units

OPERATION MANUAL

OMRON

SYSMAC CS/CJ Series
ID Sensor Units

Operation Manual

Revised December 2004

READ AND UNDERSTAND THIS DOCUMENT

Please read and understand this document before using the products. Please consult your OMRON representative if you have any questions or comments.

WARRANTY

OMRON's exclusive warranty is that the products are free from defects in materials and workmanship for a period of one year (or other period if specified) from date of sale by OMRON.

OMRON MAKES NO WARRANTY OR REPRESENTATION, EXPRESS OR IMPLIED, REGARDING NON-INFRINGEMENT, MERCHANTABILITY, OR FITNESS FOR PARTICULAR PURPOSE OF THE PRODUCTS. ANY BUYER OR USER ACKNOWLEDGES THAT THE BUYER OR USER ALONE HAS DETERMINED THAT THE PRODUCTS WILL SUITABLY MEET THE REQUIREMENTS OF THEIR INTENDED USE. OMRON DISCLAIMS ALL OTHER WARRANTIES, EXPRESS OR IMPLIED.

LIMITATIONS OF LIABILITY

OMRON SHALL NOT BE RESPONSIBLE FOR SPECIAL, INDIRECT, OR CONSEQUENTIAL DAMAGES, LOSS OF PROFITS OR COMMERCIAL LOSS IN ANY WAY CONNECTED WITH THE PRODUCTS, WHETHER SUCH CLAIM IS BASED ON CONTRACT, WARRANTY, NEGLIGENCE, OR STRICT LIABILITY.

In no event shall responsibility of OMRON for any act exceed the individual price of the product on which liability is asserted.

IN NO EVENT SHALL OMRON BE RESPONSIBLE FOR WARRANTY, REPAIR, OR OTHER CLAIMS REGARDING THE PRODUCTS UNLESS OMRON'S ANALYSIS CONFIRMS THAT THE PRODUCTS WERE PROPERLY HANDLED, STORED, INSTALLED, AND MAINTAINED AND NOT SUBJECT TO CONTAMINATION, ABUSE, MISUSE, OR INAPPROPRIATE MODIFICATION OR REPAIR.

SUITABILITY FOR USE

THE PRODUCTS CONTAINED IN THIS DOCUMENT ARE NOT SAFETY RATED. THEY ARE NOT DESIGNED OR RATED FOR ENSURING SAFETY OF PERSONS, AND SHOULD NOT BE RELIED UPON AS A SAFETY COMPONENT OR PROTECTIVE DEVICE FOR SUCH PURPOSES. Please refer to separate catalogs for OMRON's safety rated products.

OMRON shall not be responsible for conformity with any standards, codes, or regulations that apply to the combination of products in the customer's application or use of the product.

At the customer's request, OMRON will provide applicable third party certification documents identifying ratings and limitations of use that apply to the products. This information by itself is not sufficient for a complete determination of the suitability of the products in combination with the end product, machine, system, or other application or use.

The following are some examples of applications for which particular attention must be given. This is not intended to be an exhaustive list of all possible uses of the products, nor is it intended to imply that the uses listed may be suitable for the products:

- Outdoor use, uses involving potential chemical contamination or electrical interference, or conditions or uses not described in this document.
- Nuclear energy control systems, combustion systems, railroad systems, aviation systems, medical equipment, amusement machines, vehicles, safety equipment, and installations subject to separate industry or government regulations.
- Systems, machines, and equipment that could present a risk to life or property.

Please know and observe all prohibitions of use applicable to the products.

NEVER USE THE PRODUCTS FOR AN APPLICATION INVOLVING SERIOUS RISK TO LIFE OR PROPERTY WITHOUT ENSURING THAT THE SYSTEM AS A WHOLE HAS BEEN DESIGNED TO ADDRESS THE RISKS, AND THAT THE OMRON PRODUCT IS PROPERLY RATED AND INSTALLED FOR THE INTENDED USE WITHIN THE OVERALL EQUIPMENT OR SYSTEM.

PERFORMANCE DATA

Performance data given in this document is provided as a guide for the user in determining suitability and does not constitute a warranty. It may represent the result of OMRON's test conditions, and the users must correlate it to actual application requirements. Actual performance is subject to the OMRON Warranty and Limitations of Liability.

CHANGE IN SPECIFICATIONS

Product specifications and accessories may be changed at any time based on improvements and other reasons.

It is our practice to change model numbers when published ratings or features are changed, or when significant construction changes are made. However, some specifications of the product may be changed without any notice. When in doubt, special model numbers may be assigned to fix or establish key specifications for your application on your request. Please consult with your OMRON representative at any time to confirm actual specifications of purchased products.

DIMENSIONS AND WEIGHTS

Dimensions and weights are nominal and are not to be used for manufacturing purposes, even when tolerances are shown.

ERRORS AND OMISSIONS

The information in this document has been carefully checked and is believed to be accurate; however, no responsibility is assumed for clerical, typographical, or proofreading errors, or omissions.

PROGRAMMABLE PRODUCTS

OMRON shall not be responsible for the user's programming of a programmable product, or any consequence thereof.

COPYRIGHT AND COPY PERMISSION

This document shall not be copied for sales or promotions without permission.

This document is protected by copyright and is intended solely for use in conjunction with the product. Please notify us before copying or reproducing this document in any manner, for any other purpose. If copying or transmitting this document to another, please copy or transmit it in its entirety.

Meanings of Signal Words

The following signal words are used in this manual.

⚠ **WARNING**	Indicates a potentially hazardous situation which, if not avoided, will result in minor or moderate injury, or may result in serious injury or death. Additionally there may be significant property damage.
⚠ **CAUTION**	Indicates a potentially hazardous situation which, if not avoided, may result in minor or moderate injury or in property damage.

Meanings of Alert Symbols

The following alert symbols are used in this manual.

	Indicates the possibility of explosion under specific conditions.

Alert Statements in this Manual

The following alert statements apply to the products in this manual. Each alert statement also appears at the locations needed in this manual to attract your attention.

⚠ **WARNING**	
The SRAM-type Data Carrier has a built-in lithium battery which can combust or explode if mishandled. Do not disassemble the Data Carrier, or subject it to high pressure or high temperatures (of 1005C or more), or dispose of it by incineration.	

Notice:

OMRON products are manufactured for use according to proper procedures by a qualified operator and only for the purposes described in this manual.

The following conventions are used to indicate and classify precautions in this manual. Always heed the information provided with them. Failure to heed precautions can result in injury to people or damage to property.

OMRON Product References

All OMRON products are capitalized in this manual. The word “Unit” is also capitalized when it refers to an OMRON product, regardless of whether or not it appears in the proper name of the product.

The abbreviation “Ch,” which appears in some displays and on some OMRON products, often means “word” and is abbreviated “Wd” in documentation in this sense.

The abbreviation “PLC” means Programmable Controller. “PC” is used, however, in some Programming Device displays to mean Programmable Controller.

Visual Aids

The following headings appear in the left column of the manual to help you locate different types of information.

Note Indicates information of particular interest for efficient and convenient operation of the product.

1,2,3... 1. Indicates lists of one sort or another, such as procedures, checklists, etc.

© OMRON, 2003

All rights reserved. No part of this publication may be reproduced, stored in a retrieval system, or transmitted, in any form, or by any means, mechanical, electronic, photocopying, recording, or otherwise, without the prior written permission of OMRON.

No patent liability is assumed with respect to the use of the information contained herein. Moreover, because OMRON is constantly striving to improve its high-quality products, the information contained in this manual is subject to change without notice. Every precaution has been taken in the preparation of this manual. Nevertheless, OMRON assumes no responsibility for errors or omissions. Neither is any liability assumed for damages resulting from the use of the information contained in this publication.

TABLE OF CONTENTS

PRECAUTIONS xiii

1 Intended Audience xiv
2 General Precautions xiv
3 Safety Precautions xiv
4 Operating Environment Precautions xv
5 Application Precautions xvi
6 Precautions for Users of the C200H-IDS01(-V1) xvii
7 Conformance to EC Directives xviii

SECTION 1
Features and System Configuration 1

1-1 Outline of Features and Functions 2
1-2 System Configuration 4
1-3 Functions by Application 8

SECTION 2
CS-series ID Sensor Units 9

2-1 Specifications 10
2-2 Operating Procedure 12
2-3 Part Names and Functions 17
2-4 Connections and Wiring 19

SECTION 3
CJ-series ID Sensor Units 23

3-1 Specifications 24
3-2 Operating Procedure 26
3-3 Part Names and Functions 31
3-4 Connections and Wiring 33

SECTION 4
Data Exchange with the CPU Unit 37

4-1 Outline of Data Exchange 38
4-2 Initial Settings Data 41
4-3 I/O Data Allocations 43

SECTION 5
ID Sensor Unit Functions 51

5-1 Operating Modes 52
5-2 Communications Specifications 52
5-3 System Settings and Auto Wait Time Setting 56
5-4 Data Carrier Memory 59

TABLE OF CONTENTS

5-5 Write Protection 61
5-6 Data Carrier Life Check 64
5-7 Data Check 69

SECTION 6
Controlling the ID Sensor Unit 73

6-1 ID Sensor Unit Operation 74
6-2 Communications Commands 78
6-3 Communications Time 91

SECTION 7
Troubleshooting Alarms and Errors 93

7-1 Indicators and Error Check Flowcharts 94
7-2 ID Sensor Unit Alarms 96
7-3 CPU Unit Errors 100
7-4 Restarting Special I/O Units 101
7-5 Troubleshooting 102

Appendices

A Dimensions 105
B Sample Programming 107
C Data Coding Tables 123

Revision History 127

About this Manual:

This manual describes the installation and operation of the CS1W-V600C11 and CS1W-V600C12 CS-series ID Sensor Units and the CJ1W-V600C11 and CJ1W-V600C12 CJ-series ID Sensor Units, and it includes the sections described below.

Please read this manual carefully and be sure you understand the information provided before attempting to install or operate a ID Sensor Unit. Be sure to read the precautions provided in the following section.

Precautions provides general precautions for using the ID Sensor Units, Programmable Controller, and related devices.

Section 1 describes the features and system configuration of an ID Sensor Unit.

Section 2 describes the specifications, operation, and installation of ID Sensor Units for CS-series PLCs.

Section 3 describes the specifications, operation, and installation of ID Sensor Units for CJ-series PLCs.

Section 4 describes the methods used to exchange data with the CPU Unit and the data that is exchanged.

Section 5 describes the operation of the ID Sensor Units.

Section 6 describes how to control an ID Sensor Unit using commands from the PLC's CPU Unit.

Section 7 describes troubleshooting errors that can occur during ID Sensor Unit operation.

The ***Appendices*** provide dimensions, sample programming, and data coding tables.

⚠ WARNING

Failure to read and understand the information provided in this manual may result in personal injury or death, damage to the product, or product failure. Please read each section in its entirety and be sure you understand the information provided in the section and related sections before attempting any of the procedures or operations given.

PRECAUTIONS

This section provides general precautions for using the ID Sensor Unit, Programmable Controller, and related devices.

The information contained in this section is important for the safe and reliable application of the ID Sensor Unit. You must read this section and understand the information contained before attempting to set up or operate a ID Sensor Unit and PLC system.

1 Intended Audience xiv
2 General Precautions xiv
3 Safety Precautions xiv
4 Operating Environment Precautions xv
5 Application Precautions xvi
6 Precautions for Users of the C200H-IDS01(-V1) xvii
7 Conformance to EC Directives xviii
7-1 Applicable Directives xviii
7-2 Concepts xviii
7-3 Conformance to EC Directives xix
7-4 Relay Output Noise Reduction Methods xix

1 Intended Audience

This manual is intended for the following personnel, who must also have knowledge of electrical systems (an electrical engineer or the equivalent).

- Personnel in charge of installing FA systems.
- Personnel in charge of designing FA systems.
- Personnel in charge of managing FA systems and facilities.

2 General Precautions

The user must operate the product according to the performance specifications described in the operation manuals.

Before using the product under conditions which are not described in the manual or applying the product to nuclear control systems, railroad systems, aviation systems, vehicles, combustion systems, medical equipment, amusement machines, safety equipment, and other systems, machines, and equipment that may have a serious influence on lives and property if used improperly, consult your OMRON representative.

Make sure that the ratings and performance characteristics of the product are sufficient for the systems, machines, and equipment, and be sure to provide the systems, machines, and equipment with double safety mechanisms.

This manual provides information for installing and operating OMRON ID Sensor Units. Be sure to read this manual before operation and keep this manual close at hand for reference during operation.

⚠ WARNING

It is extremely important that a PLC and all PLC Units be used for the specified purpose and under the specified conditions, especially in applications that can directly or indirectly affect human life. You must consult with your OMRON representative before applying a PLC system to the above mentioned applications.

3 Safety Precautions

⚠ WARNING

Never attempt to disassemble any Units while power is being supplied. Doing so may result in serious electrical shock or electrocution.

⚠ WARNING

Never touch any of the terminals while power is being supplied. Doing so may result in serious electrical shock or electrocution.

⚠ WARNING

The SRAM-type Data Carrier has a built-in lithium battery which can combust or explode if mishandled. Do not disassemble the Data Carrier, or subject it to high pressure or high temperatures (of 100 °C or more), or dispose of it by incineration.

⚠ WARNING

Provide safety measures in external circuits, i.e., not in the PLC (CPU Unit including associated Units), in order to ensure safety in the system if an abnormality occurs due to malfunction of the PLC or another external factor affecting the PLC operation. Not doing so may result in serious accidents.

- Emergency stop circuits, interlock circuits, limit circuits, and similar safety measures must be provided in external control circuits.
- The PLC will turn OFF all outputs when its self-diagnosis function detects any error or when a severe failure alarm (FALS) instruction is executed. As a countermeasure for such errors, external safety measures must be provided to ensure safety in the system.
- The PLC outputs may remain ON or OFF due to deposition or burning of the output relays or destruction of the output transistors. As a countermeasure for such problems, external safety measures must be provided to ensure safety in the system.

⚠ CAUTION

Execute online edit only after confirming that no adverse effects will be caused by extending the cycle time. Otherwise, the input signals may not be readable.

4 Operating Environment Precautions

Do not operate the control system in the following places.

- Where the PLC is exposed to direct sunlight.
- Where the ambient temperature or humidity is outside the ranges given in the Unit specifications.
- Where the PLC may be affected by condensation due to radical temperature changes.
- Where there is any corrosive or inflammable gas.
- Where there is excessive dust, saline air, or metal powder.
- Where the PLC is affected by vibration or shock.
- Where any water, oil or chemical may splash on the PLC.

Provide proper shielding when installing in the following locations:

- Locations subject to static electricity or other sources of noise.
- Locations subject to strong electromagnetic fields.
- Locations subject to possible exposure to radiation.
- Locations near to power supply lines.

⚠ CAUTION

The operating environment of the PLC System can have a large effect on the longevity and reliability of the system. Improper operating environments can lead to malfunction, failure, and other unforeseeable problems with the PLC System. Be sure that the operating environment is within the specified conditions at installation and remains within the specified conditions during the life of the system.

5 Application Precautions

Observe the following precautions when using the ID Sensor Unit or the PLC.

⚠ WARNING

Failure to abide by the following precautions could lead to serious or possibly fatal injury. Always heed these precautions.

- Always turn OFF the power supply to the PLC before attempting any of the following. Performing any of the following with the power supply turned ON may lead to electrical shock:
  - Mounting or removing any Units (e.g., Power Supply Unit, I/O Units, CPU Unit, etc.) or Memory Cassettes.
  - Assembling any devices or racks.
  - Setting DIP switches or rotary switches.
  - Connecting or disconnecting any cables or wiring.

⚠ CAUTION

Failure to abide by the following precautions could lead to faulty operation of the PLC or the system or could damage the PLC or PLC Units. Always heed these precautions.

- Fail-safe measures must be taken by the customer to ensure safety in the event that outputs from Output Units remain ON as a result of internal circuit failures, which can occur in relays, transistors, and other elements.
- Always use the power supply voltages specified in the operation manuals. An incorrect voltage may result in malfunction or burning.
- Take appropriate measures to ensure that the specified power with the rated voltage and frequency is supplied in places where the power supply is unstable. An incorrect power supply may result in malfunction.
- Install external breakers and take other safety measures against short-circuiting in external wiring. Insufficient safety measures against short-circuiting may result in burning.
- Do not apply voltages to the Input Units in excess of the rated input voltage. Excess voltages may result in burning.
- Do not apply voltages or connect loads to the Output Units in excess of the maximum switching capacity. Excess voltage or loads may result in burning.
- Install the Units properly as specified in the operation manuals. Improper installation of the Units may result in malfunction.
- Be sure that all the mounting screws, terminal screws, and cable connector screws are tightened to the torque specified in the relevant manuals. Incorrect tightening torque may result in malfunction.
- Do not attempt to take any Units apart, to repair any Units, or to modify any Units in any way.
- Check switch settings, the contents of the DM Area, and other preparations before starting operation. Starting operation without the proper settings or data may result in an unexpected operation.
- Leave the label attached to the Unit when wiring. Removing the label may result in malfunction if foreign matter enters the Unit.
- Remove the label after the completion of wiring to ensure proper heat dissipation. Leaving the label attached may result in malfunction.

- Use crimp terminals for wiring. Do not connect bare stranded wires directly to terminals.
- Observe the following precautions when wiring cables.
  - Do not bend the cables past their natural bending radius.
  - Do not pull on the cables.
  - Do not place heavy objects on top of the cables.
- Check terminal blocks sufficiently before mounting them.
- Be sure that the terminal blocks, Memory Units, expansion cables, and other items with locking devices are properly locked into place. Improper locking may result in malfunction.
- Check the user program for proper execution before actually running it on the Unit. Not checking the program may result in an unexpected operation.
- Check all wiring carefully before turning ON the power supply.
- Confirm that no adverse effect will occur in the system before attempting any of the following. Not doing so may result in an unexpected operation.
  - Changing the operating mode of the PLC.
  - Force-setting/force-resetting any bit in memory.
  - Changing the present value of any word or any set value in memory.
- Before touching a Unit, be sure to first touch a grounded metallic object in order to discharge any static build-up. Not doing so may result in malfunction or damage.
- Stop operation and turn OFF the power supply immediately if you smell any unusual odors, if the surface of the Unit become abnormally hot, if smoke appears, of if the Unit seems unusual in any other way.

6 Precautions for Users of the C200H-IDS01(-V1)

The CS1W-V600C11, CS1W-V600C12, CJ1W-V600C11, and CJ1W-V600C12 (CS/CJ-series) ID Sensor Units **cannot** be controlled with programming written for the C200H-IDS01 or C200H-IDS01-V1 ID Sensor Unit. Refer to *SECTION 4 Data Exchange with the CPU Unit* for details. This section describes the main differences between these Units.

Command Settings

The CS/CJ-series ID Sensor Units allow the Data Carrier processing command and Data Carrier communications method (i.e., the communications specification) to be set separately. Commands written for the C200H ID Sensor Units cannot be used without modification. Refer to *SECTION 4 Data Exchange with the CPU Unit* for details on designating commands and communications methods.

New Commands

New commands have been added that allow individual bits to be written and that allow data to be copied from one Data Carrier to another.

Command name	Function
Bit Set	Sets the specified bits of the specified area in the Data Carrier.
Bit Clear	Clears the specified bits of the specified area in the Data Carrier.
Mask Bit Write	Masks the specified bits in the specified area of the Data Carrier and writes data to the bits that are not masked.
Copy	Writes the data read from a Data Carrier by one R/W Head to the Data Carrier in the communications area of the other R/W Head. This command is supported by Double-head ID Sensor Units only.

New Communications Operations

The Repeat Auto communications specification, which repeats the operation of an Auto specification, has been added. The Repeat Auto specification can be used with CS/CJ-series ID Sensor Units to place the ID Sensor Unit on standby waiting for the next Data Carrier after communications with the previous Data Carrier have been finished. Operation is ended when the Abort Bit is turned ON (refer to *5-2 Communications Specifications*).

Changes in Monitoring Function

A switch on the front panel is used to switch between controlling the ID Sensor Unit with the user program in the CS/CJ-series CPU Unit and performing communications tests. In Test Mode, one byte is read and then written repeatedly. The results of the communications test are confirmed on the status indicators and the Processing Results Monitor (refer to *5-1 Operating Modes*).

7 Conformance to EC Directives

7-1 Applicable Directives

- EMC Directives
- Low Voltage Directive

7-2 Concepts

EMC Directives

OMRON devices that comply with EC Directives also conform to the related EMC standards so that they can be more easily built into other devices or the overall machine. The actual products have been checked for conformity to EMC standards (see the following note). Whether the products conform to the standards in the system used by the customer, however, must be checked by the customer.

EMC-related performance of the OMRON devices that comply with EC Directives will vary depending on the configuration, wiring, and other conditions of the equipment or control panel on which the OMRON devices are installed. The customer must, therefore, perform the final check to confirm that devices and the overall machine conform to EMC standards.

Note Applicable EMC (Electromagnetic Compatibility) standards are as follows:

EMS (Electromagnetic Susceptibility): EN61000-6-2
EMI (Electromagnetic Interference): EN50081-2
(Radiated emission: 10-m regulations)

Low Voltage Directive

Always ensure that devices operating at voltages of 50 to 1,000 V AC and 75 to 1,500 V DC meet the required safety standards for the PLC (EN61131-2).

7-3 Conformance to EC Directives

The CS/CJ-series PLCs comply with EC Directives. To ensure that the machine or device in which the CS/CJ-series PLC is used complies with EC Directives, the PLC must be installed as follows:

1,2,3...

1. The CS/CJ-series PLC must be installed within a control panel.
2. You must use reinforced insulation or double insulation for the DC power supplies used for the communications power supply and I/O power supplies.
3. CS/CJ-series PLCs complying with EC Directives also conform to the Common Emission Standard (EN50081-2). Radiated emission characteristics (10-m regulations) may vary depending on the configuration of the control panel used, other devices connected to the control panel, wiring, and other conditions. You must therefore confirm that the overall machine or equipment complies with EC Directives.

7-4 Relay Output Noise Reduction Methods

The CS/CJ-series PLCs conforms to the Common Emission Standards (EN50081-2) of the EMC Directives. However, noise generated by relay output switching may not satisfy these Standards. In such a case, a noise filter must be connected to the load side or other appropriate countermeasures must be provided external to the PLC.

Countermeasures taken to satisfy the standards vary depending on the devices on the load side, wiring, configuration of machines, etc. Following are examples of countermeasures for reducing the generated noise.

Countermeasures

(Refer to EN50081-2 for more details.)

Countermeasures are not required if the frequency of load switching for the whole system with the PLC included is less than 5 times per minute.

Countermeasures are required if the frequency of load switching for the whole system with the PLC included is more than 5 times per minute.

Countermeasure Examples

When switching an inductive load, connect an surge protector, diodes, etc., in parallel with the load or contact as shown below.

Circuit	Current		Characteristic	Required element
	AC	DC		
CR method 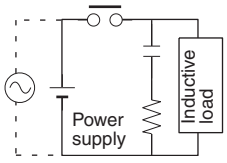	Yes	Yes	If the load is a relay or solenoid, there is a time lag between the moment the circuit is opened and the moment the load is reset. If the supply voltage is 24 or 48 V, insert the surge protector in parallel with the load. If the supply voltage is 100 to 200 V, insert the surge protector between the contacts.	The capacitance of the capacitor must be 1 to 0.5 μF per contact current of 1 A and resistance of the resistor must be 0.5 to 1 Ω per contact voltage of 1 V. These values, however, vary with the load and the characteristics of the relay. Decide these values from experiments, and take into consideration that the capacitance suppresses spark discharge when the contacts are separated and the resistance limits the current that flows into the load when the circuit is closed again. The dielectric strength of the capacitor must be 200 to 300 V. If the circuit is an AC circuit, use a capacitor with no polarity.
Diode method 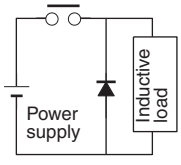	No	Yes	The diode connected in parallel with the load changes energy accumulated by the coil into a current, which then flows into the coil so that the current will be converted into Joule heat by the resistance of the inductive load. This time lag, between the moment the circuit is opened and the moment the load is reset, caused by this method is longer than that caused by the CR method.	The reversed dielectric strength value of the diode must be at least 10 times as large as the circuit voltage value. The forward current of the diode must be the same as or larger than the load current. The reversed dielectric strength value of the diode may be two to three times larger than the supply voltage if the surge protector is applied to electronic circuits with low circuit voltages.
Varistor method 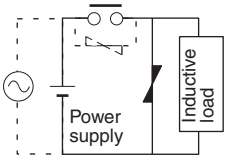	Yes	Yes	The varistor method prevents the imposition of high voltage between the contacts by using the constant voltage characteristic of the varistor. There is time lag between the moment the circuit is opened and the moment the load is reset. If the supply voltage is 24 or 48 V, insert the varistor in parallel with the load. If the supply voltage is 100 to 200 V, insert the varistor between the contacts.	---

When switching a load with a high inrush current such as an incandescent lamp, suppress the inrush current as shown below.

Countermeasure 1

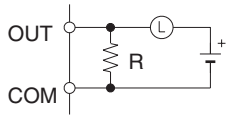

Providing a dark current of approx. one-third of the rated value through an incandescent lamp

Countermeasure 2

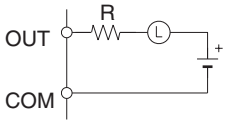

Providing a limiting resistor

SECTION 1
Features and System Configuration

This section describes the features and system configuration of an ID Sensor Unit.

1-1 Outline of Features and Functions 2
1-2 System Configuration 4
1-2-1 Basic System Configuration 4
1-2-2 Mounting Restrictions 5
1-2-3 Mounting Units 6
1-2-4 Unit Handling Precautions 8
1-3 Functions by Application 8

1-1 Outline of Features and Functions

SYSMAC CS-series ID Sensor Units

Single-head ID Sensor Unit (CS1W-V600C11)

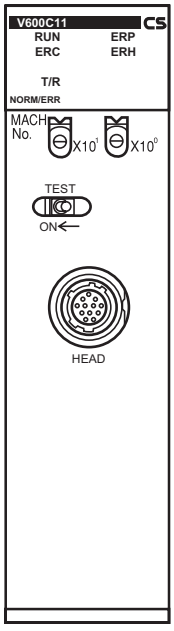

Double-head ID Sensor Unit (CS1W-V600C12)

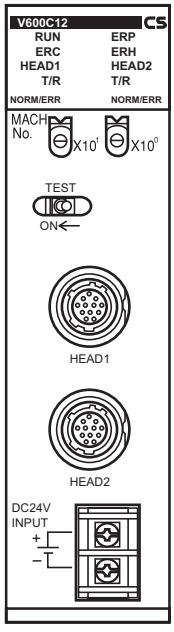

These ID Sensor Units read and write data for V600-series Data Carriers for SYSMAC CS-series PLCs. There are two models: a Single-head ID Sensor Unit (CS1W-V600C11) and a Double-head ID Sensor Unit (CS1W-V600C12).

CS-series Units can be mounted to a CS-series CPU Rack or CS-series Expansion Rack.

SYSMAC CJ-series ID Sensor Units

Single-head ID Sensor Unit (CJ1W-V600C11)

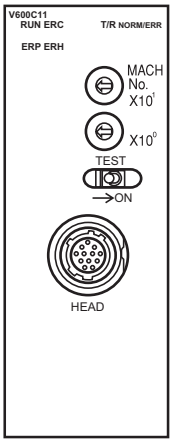

Double-head ID Sensor Unit (CJ1W-V600C12)

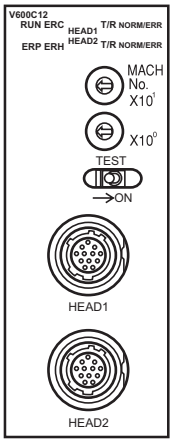

These ID Sensor Units read and write data for V600-series Data Carriers for SYSMAC CJ-series PLCs. There are two models: a Single-head ID Sensor Unit (CJ1W-V600C11) and a Double-head ID Sensor Unit (CJ1W-V600C12).

CJ-series Units can be connected in a CJ-series CPU Rack or CJ-series Expansion Rack.

Applicable Products and Commands

	CS1W-V600C11	CS1W-V600C12	CJ1W-V600C11	CJ1W-V600C12
R/W Head	V600-series (V600-H□□)			
Maximum number of connected Heads	1	2	1	2
Applicable Data Carriers	V600-series Data Carriers (V600-D□□R□□ or V600-D□□P□□)			
Commands	Read Write Bit Set Bit Clear Mask Bit Write Calculation Write Data Fill Data Check Number of Writes Control	Read Write Bit Set Bit Clear Mask Bit Write Calculation Write Data Fill Data Check Number of Writes Control Copy	Read Write Bit Set Bit Clear Mask Bit Write Calculation Write Data Fill Data Check Number of Writes Control	Read Write Bit Set Bit Clear Mask Bit Write Calculation Write Data Fill Data Check Number of Writes Control Copy

An RFID system consists of an ID Sensor Unit in a CS-series/CJ-series CPU Rack or CS-series/CJ-series Expansion Rack, a R/W Head(s) connected to the ID Sensor Unit, and Data Carriers connected to moving bodies.

The ID Sensor Unit operates through the R/W Head(s) to write data from the CS/CJ-series CPU Unit to the Data Carriers and read data from the Data Carriers to the CS/CJ-series CPU Unit.

1-2 System Configuration

1-2-1 Basic System Configuration

CS-series PLCs

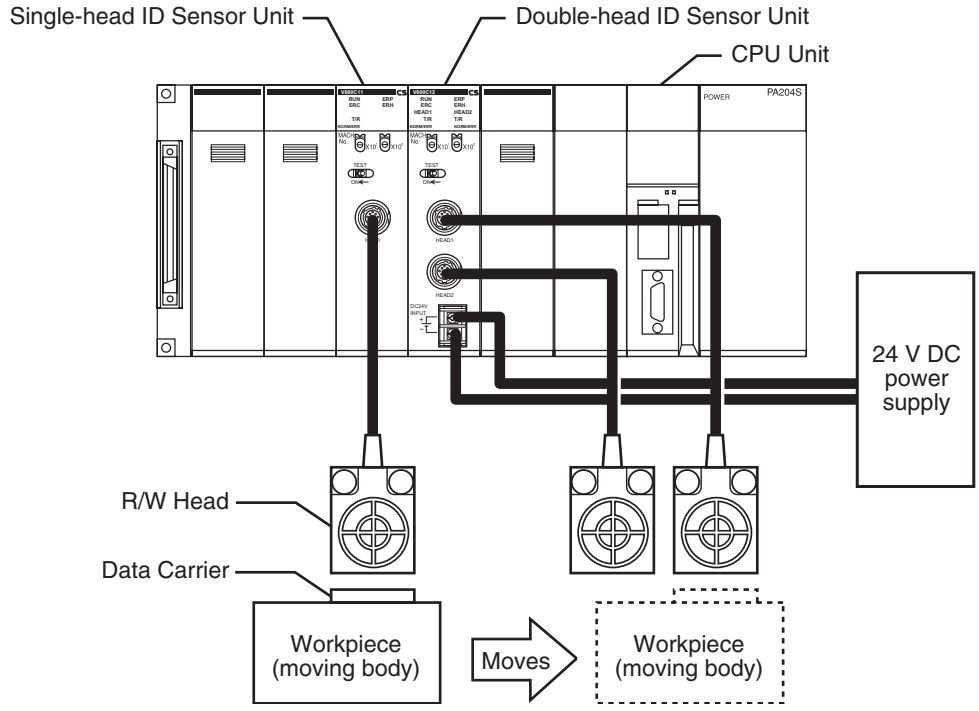

Note The above example uses one Single-head ID Sensor Unit (CS1W-V600C11) and one Double-head ID Sensor Unit (CS1W-V600C12).

CJ-series PLCs

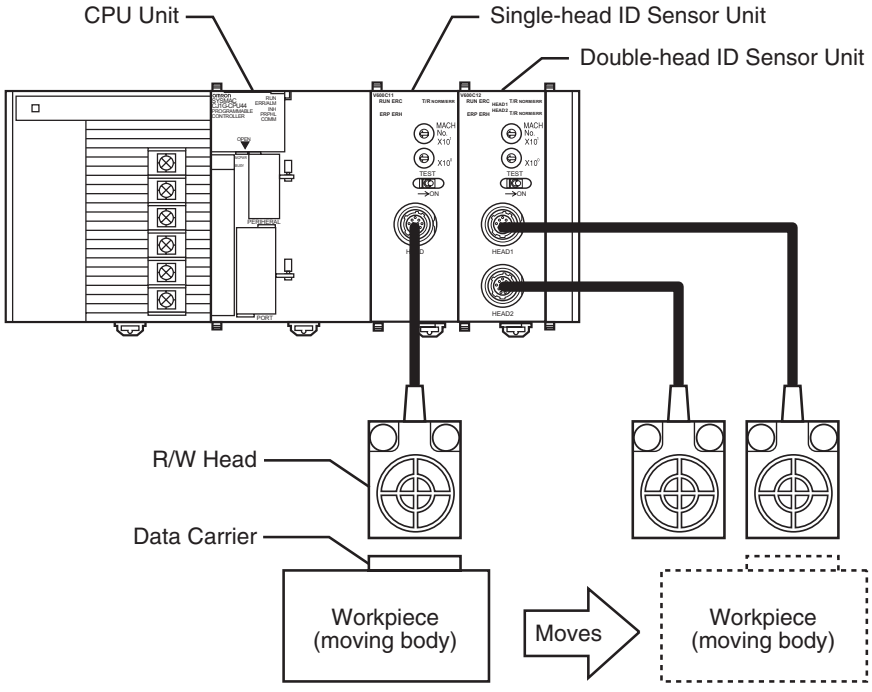

Note The above example uses one Single-head ID Sensor Unit (CJ1W-V600C11) and one Double-head ID Sensor Unit (CJ1W-V600C12).

1-2-2 Mounting Restrictions

CS-series PLCs

CS-series ID Sensor Units are classified as CS-series Special I/O Units.

- These Units can be mounted to a CS-series CPU Rack or CS-series Expansion Rack.
- The number of Units per CPU Rack or Expansion Rack depends on the maximum supply current of the Power Supply Unit and current consumption of other Units on the Rack.

The following table lists the maximum number of Units per Rack when only ID Sensor Units are mounted.

Power Supply Unit	CS1W-V600C11	CS1W-V600C12
C200HW-PA204 C200HW-PA204S C200HW-PA204R C200HW-PD204 C200HW-PA209R	5	10

CJ-series PLCs

CJ-series ID Sensor Units are classified as CJ-series Special I/O Units.

- These Units can be mounted to a CJ-series CPU Rack or CJ-series Expansion Rack.
- The number of Units per CPU Rack or Expansion Rack depends on the maximum supply current of the Power Supply Unit and current consumption of other Units on the Rack.

The following table lists the maximum number of Units per Rack when only ID Sensor Units are mounted.

Power Supply Unit	CJ1W-V600C11	CJ1W-V600C12
CJ1W-PA205R	4	2
CJ1W-PA202	2	1

Note The I/O words allocated to Special I/O Units are determined by the setting of the unit number switches on the front of the Unit. They are not affected by the slots (positions) in which the Units are mounted.

1-2-3 Mounting Units

CS-series PLCs

Use the following procedure to mount an ID Sensor Unit to the Backplane.

1,2,3...

1. Lock the top of the ID Sensor Unit into the slot on the Backplane and rotate the Unit downwards as shown in the following diagram.

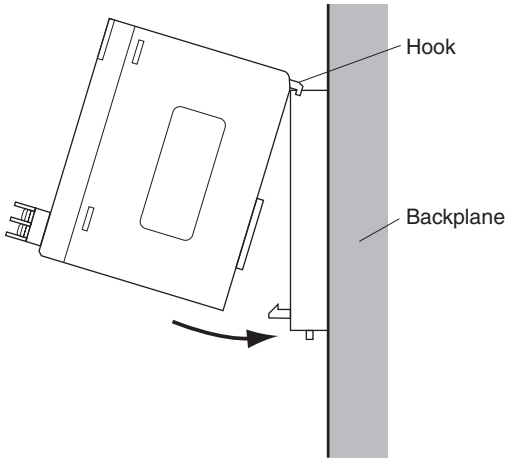

2. While making sure to align the Unit properly with the connectors, tighten the mounting screws securely to a tightening torque of 0.4 N·m.
3. To remove the Unit, first loosen the mounting screws using a Phillips screwdriver.

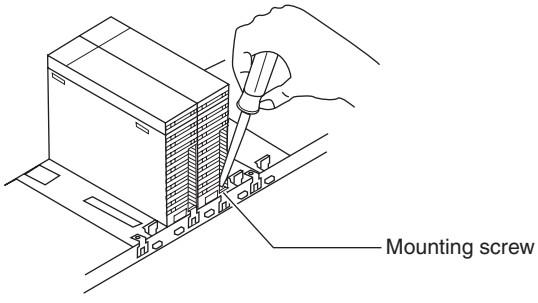

Note Leave enough space below each Rack, as shown in the following diagram, for mounting and removing the Units.

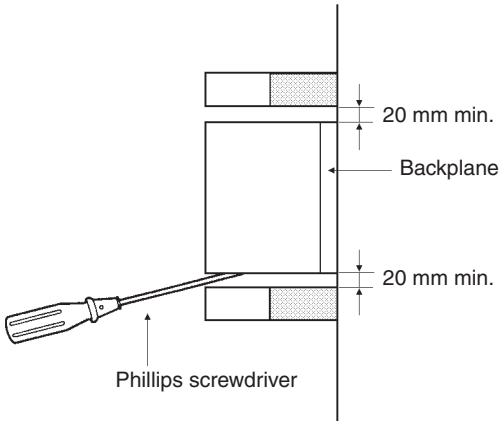

CJ-series PLCs

ID Sensor Units are connected as I/O Units in the system configuration, as shown below.

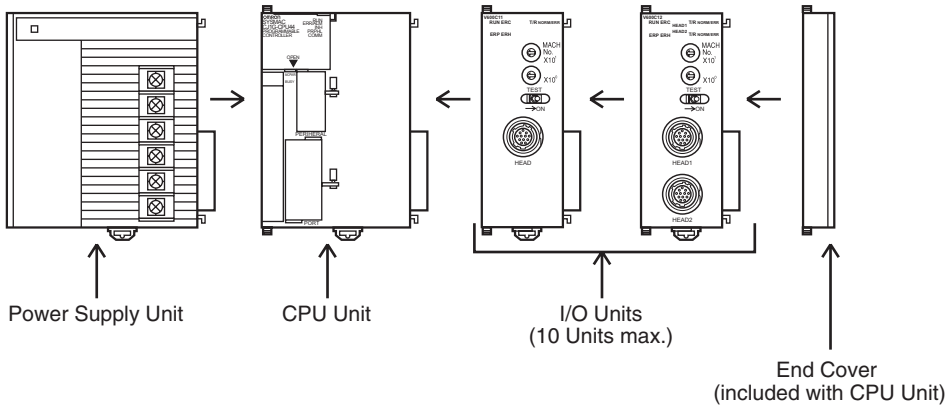

Use the following procedure to connect an ID Sensor Unit.

1,2,3...

1. Align the connectors and press in firmly on the Units to connect them completely.

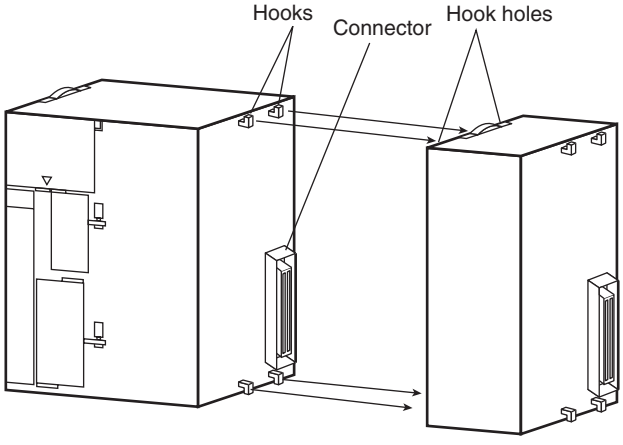

2. Move the yellow sliders on the top and bottom of the Unit to the lock position to secure the Units. The sliders should click into place.

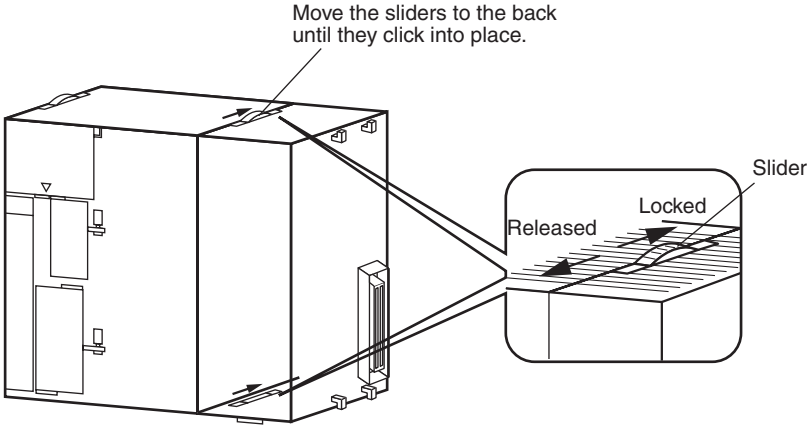

3. Attach an End Cover to the Unit on the right end of the Rack.

Note The CJ-series PC may not operate properly if the sliders are not locked firmly into place.

1-2-4 Unit Handling Precautions

Be sure to turn OFF the power supply to the PLC before installing or disconnecting Units, or connecting lines.

To reduce the risk of malfunctioning due to electrical noise, wire input and output lines in separate ducts from high-voltage and power lines.

When wiring a Unit, leave the label in place on the top of the Unit to prevent wire clippings or other materials from getting inside the Unit. When wiring has been completed, remove the label to ensure proper heat dissipation.

CS-series PLCs

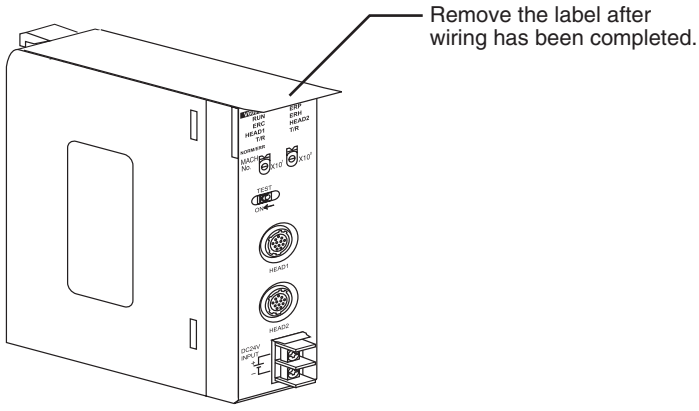

CJ-series PLCs

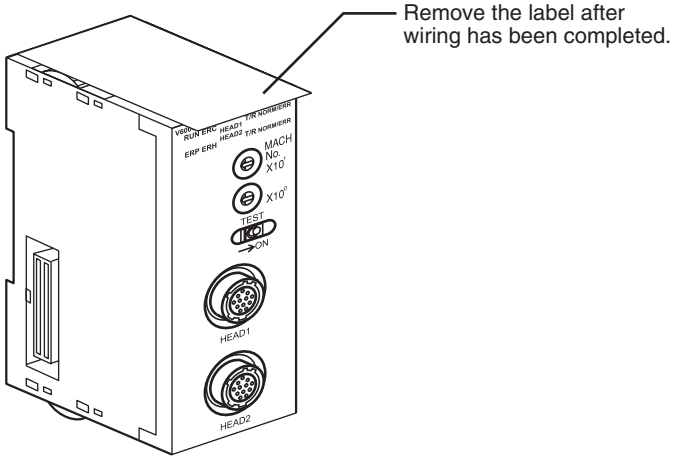

1-3 Functions by Application

Application	Function	Reference
Performing communications test with Data Carriers without programming the CPU Unit	Communications test mode	Page 52
Adjusting communications timing with Data Carriers Examples: Communicating with Data Carriers stopped in front of the R/W Head Communicating with Data Carriers passing by the R/W Head	Communications specifications	Page 52
Protecting Data Carrier memory once it has been written	Write protection	Page 61
Managing Data Carrier life	Data Carrier life check	Page 64
Checking the suitability of Data Carrier memory	Data check	Page 69

SECTION 2
CS-series ID Sensor Units

This section describes the specifications, operation, and installation of ID Sensor Units for CS-series PLCs.

2-1 Specifications 10
2-1-1 General Specifications 10
2-1-2 Performance Specifications 10
2-1-3 Communications Specifications 11
2-2 Operating Procedure 12
2-2-1 Overall Procedure 12
2-2-2 Operating Procedure Example 13
2-3 Part Names and Functions 17
2-3-1 Part Names 17
2-3-2 Indicators 18
2-3-3 Unit Number Switches 18
2-3-4 Communications Test Switch 18
2-4 Connections and Wiring 19
2-4-1 Connecting R/W Heads 19
2-4-2 Wiring the External Power Supply (CS1W-V600C12 Only) 20
2-4-3 Wiring for Safety and Noise Immunity 21

2-1 Specifications

2-1-1 General Specifications

General specifications conform to those of SYSMAC CS-series Special I/O Units.

2-1-2 Performance Specifications

	CS1W-V600C11		CS1W-V600C12	
Unit classification	Special I/O Unit			
Influence on CPU Unit's cycle time	0.15 ms		0.3 ms	
Input power supply	---		24 V DC +10%/–15%, 360 mA	
Internal current consumption	5 V DC, 260 mA max.; 26 V DC, 120 mA max.		5 V DC, 320 mA max.; 26 V DC, 0 mA max.	
Dimensions	35 × 130 × 101 mm (W×H×D)			
Weight	180 g max.		300 g max.	
Mounting location	CS-series CPU Rack or CS-series Expansion Rack (Cannot be mounted to C200H Expansion I/O Racks or SYSMAC BUS Slave Racks.)			
No. of Units per Rack	5 per Rack (CPU Rack or Expansion Rack)		10 per Rack (CPU Rack or Expansion Rack)	
Connectable Heads	V600-series R/W Heads (V600-H□□) 1 Head		V600-series R/W Heads (V600-H□□) 1 or 2 Heads	
Applicable Data Carriers	V600-series Data Carriers (V600-D□□)			
No. of allocated unit numbers	1		2	
No. of allocated words	10 words		20 words	
Control protocol	Special protocol			
Data exchange methods with CPU Unit	Special I/O Unit Area in CIO Area CIO 2000 to CIO 2959	Constant data exchange of 10 words/Unit	CPU Unit → ID Sensor Unit	Unit Controls, Communications Processing specification, Data storage area specification
			ID Sensor Unit → CPU Unit	Unit information, Results information Processing results monitor
	Special I/O Unit words in DM Area D20000 to D29599	100 words/Unit transferred when power is turned ON or when restarting the Unit	CPU Unit → ID Sensor Unit	System Settings Auto Wait Time Setting
Data transfer quantity	2,048 bytes max. (160 bytes/scan)		2,048 bytes max./Head (160 bytes/scan)	
Operating modes	Normal Mode/Test Mode (changed with communications test switch)			
Diagnostic functions	(1) ID Sensor Unit error (2) Communications error detection with Data Carriers (3) Head 24-V power supply error			

2-1-3 Communications Specifications

	CS1W-V600C11	CS1W-V600C12
Communications frequency	530 kHz	
Communications controls	(1) Changing EEPROM (battery-free) Data Carrier communications mode (distance priority or time priority) (2) Write verification (3) Auto Wait Time Setting	
Commands	Read Write Bit Set/Bit Clear Mask Bit Write Calculation Write Data Fill Data Check Number of Writes Control	Read Write Bit Set/Bit Clear Mask Bit Write Calculation Write Data Fill Data Check Number of Writes Control Copy
Communications specification	Trigger, Single auto, Repeat auto	

2-2 Operating Procedure

2-2-1 Overall Procedure

The operating procedure for an ID Sensor Unit is shown in the following flowchart.

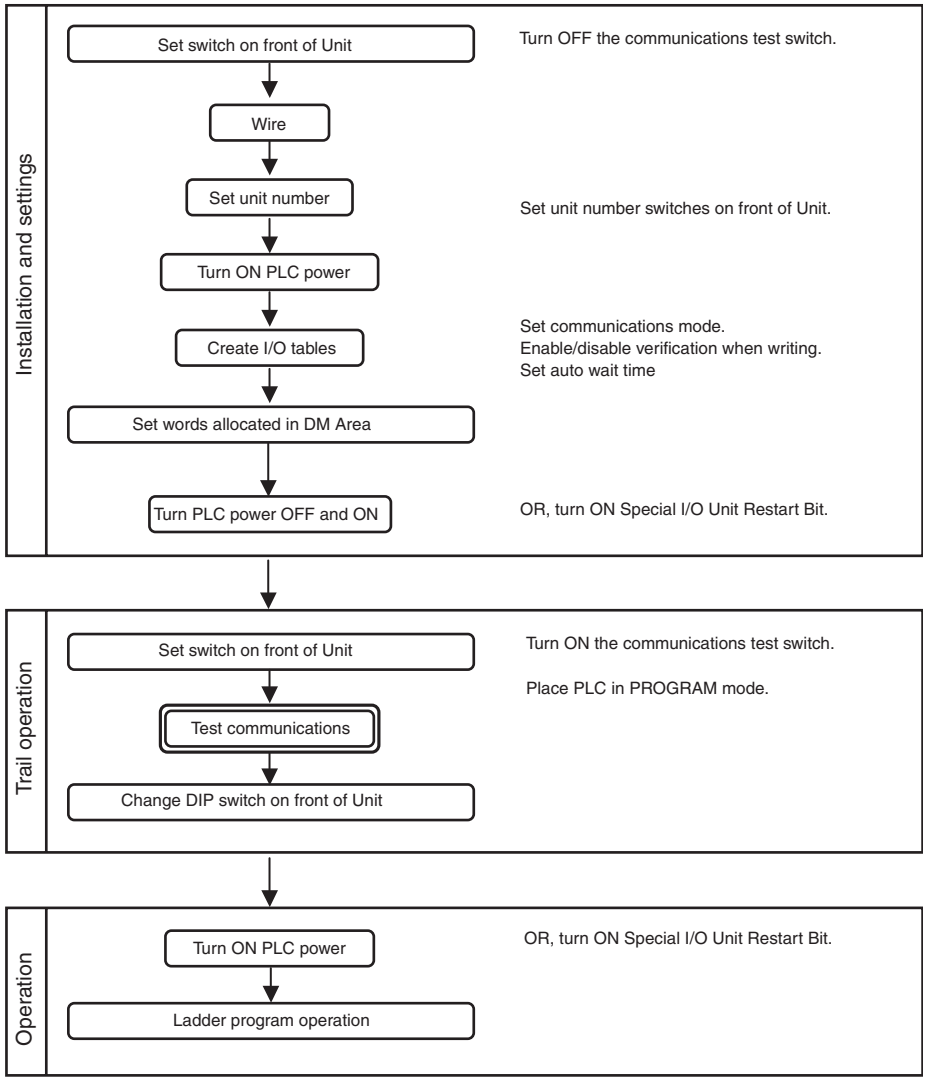

Note

1. When using CX-Programmer V3.0 or later with the CS1W-V600C12, “I” will be displayed before addresses for inputs in the ladder diagram and “Q” will be displayed before addresses for outputs for operation data. In the CX-Programmer’s **I/O Table** Window, select ***SIOU/C200H ASCII Unit (A)*** and then, from the **Enter SIOU Details** Window, set the *Address per Unit* to 2, the *Input Words* to 3, and the *Output Words* to 7, and select the *Repeat IN/OUT for each Address per Unit* option.
2. When using CX-Programmer V2.0 or later with the CS1W-V600C11, “I” will be displayed in the ladder diagram before address for inputs and “Q” will be displayed before addresses for outputs for operation data.

2-2-2 Operating Procedure Example

The following is an operating procedure example for the following conditions.

Reading 10 Bytes of Data from Data Carrier Address 0010 Using a Trigger

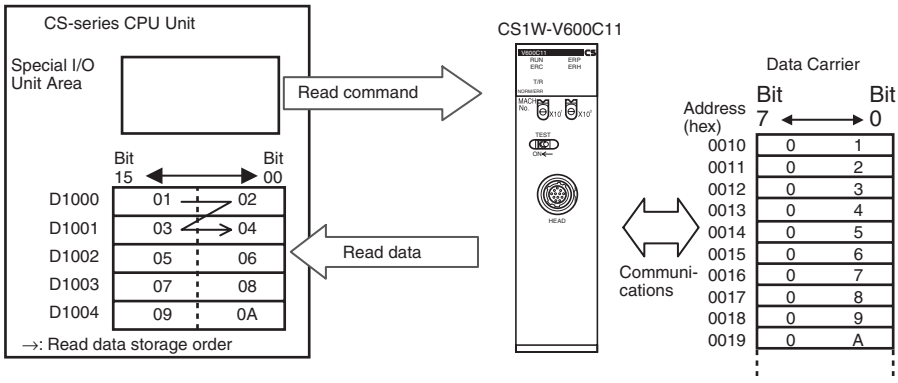

Special I/O Unit Area Settings

Unit No.: 00
Command: Read
Communications specification: Trigger
Read data storage order: Leftmost → Rightmost
First Data Carrier read address: 0010 (hex)
Number of Data Carrier read bytes: 10 bytes
Read data storage destination: D1000 to D1004

ID Sensor Unit Settings

1,2,3... 1. Communications Test Switch (Set on Unit's front panel.)

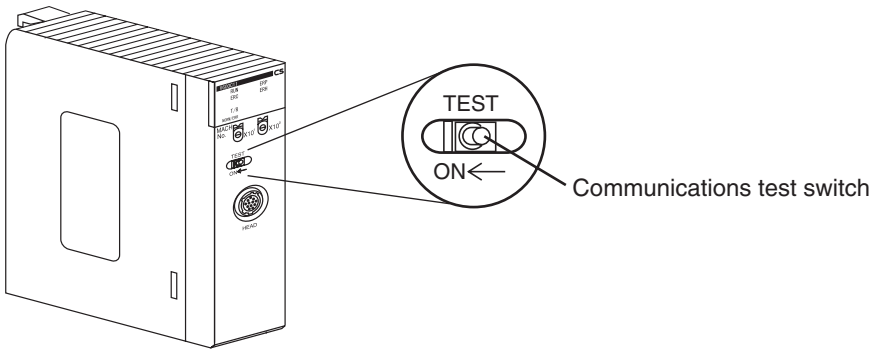

2. Mounting and Installation

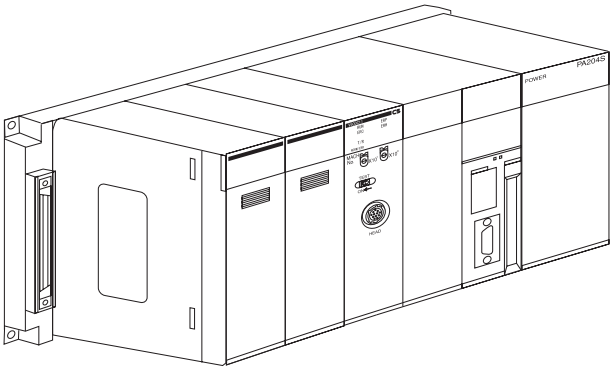

3. Unit No. Setting

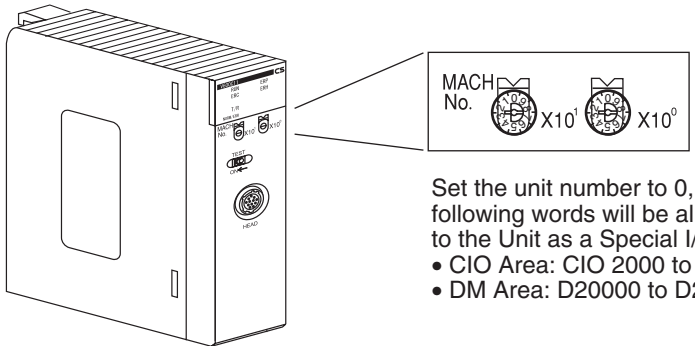

Set the unit number to 0, and the following words will be allocated to the Unit as a Special I/O Unit.
- CIO Area: CIO 2000 to CIO 2009
- DM Area: D20000 to D20099

4. PLC Power Supply ON

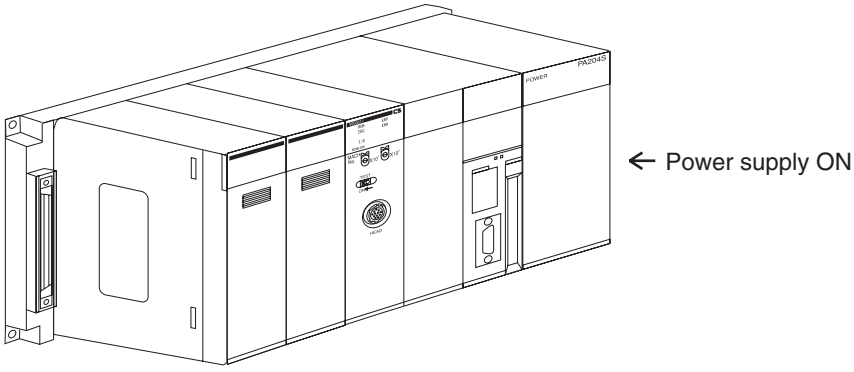

Creating I/O Tables

Always create the I/O tables after turning ON the PLC power supply. The I/O tables can be created from the Programming Console or CX-Programmer.

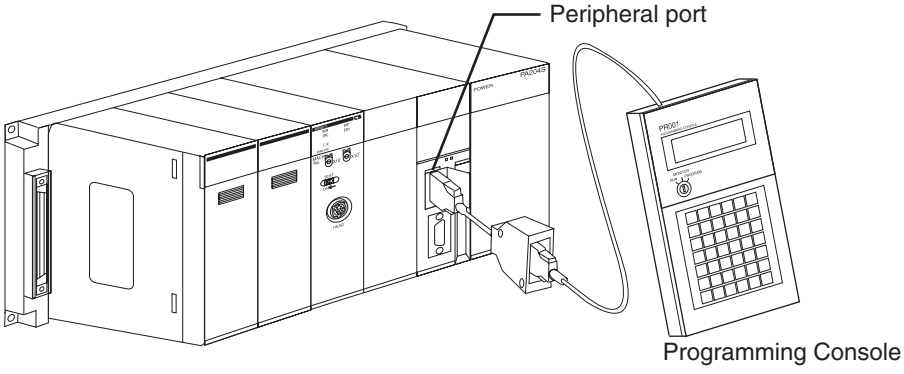

Initial Settings

1,2,3... 1. Make the settings in the words allocated to Special I/O Units in the DM Area (refer to page 41).

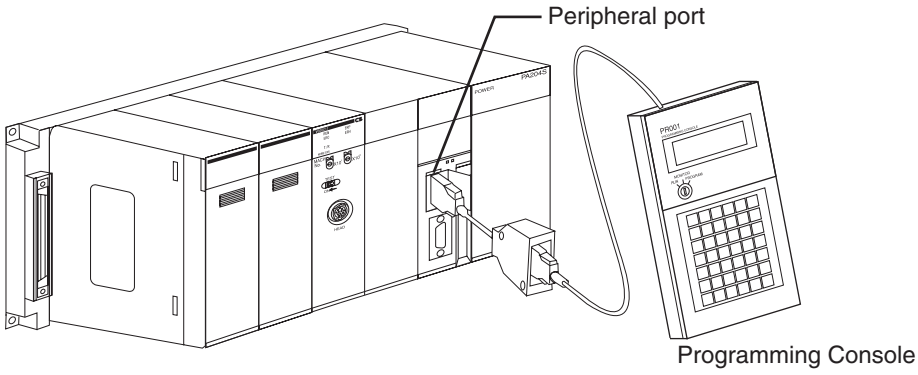

First word allocated to Unit in DM Area: m = D20000 + (100 × 0) = D20000

DM address	Contents				Meaning															
					15	14	13	12	11	10	9	8	7	6	5	4	3	2	1	0
D20000	0	0	0	0	Not used				Communications test switch enabled				Verification for writing				Communications mode: Distance			
D20001	0000				Auto Wait Time Setting: Infinite															

2. PLC Power Supply OFF and ON (or turn ON the Unit Restart Bit)

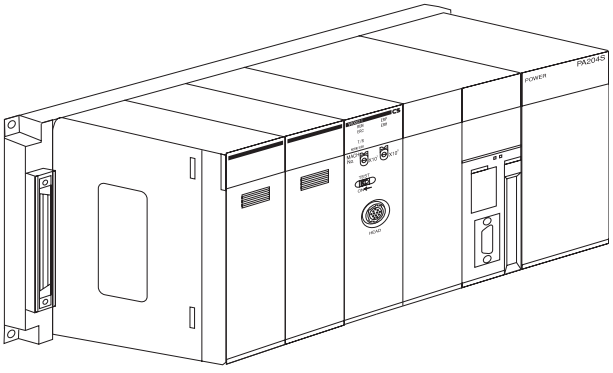

Ladder Programming

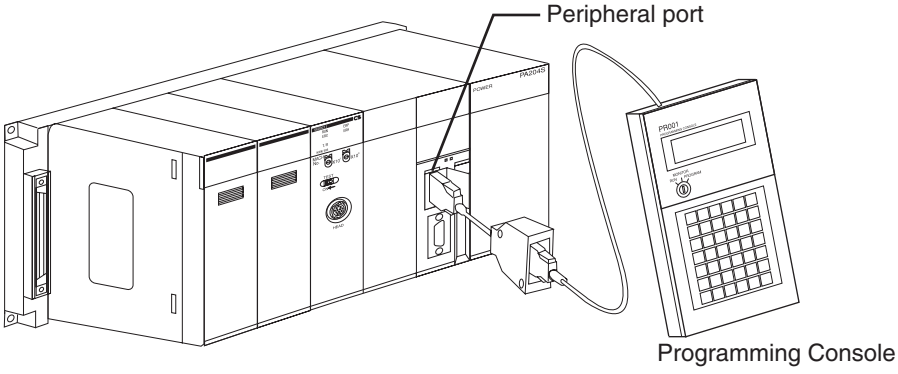

Set the Command, Communications Specification, Read Data Storage Order, First Data Carrier Read Address, Number of Bytes to Read, and Read Data Storage Destination in words (n + 1) to (n + 6) allocated in the Special I/O Unit Area (here, CIO 2001 to CIO 2006).

First word allocated to Unit in CIO Area: CIO 2000 + 10 × 0 = CIO 2000

Word address	Contents			Meaning															
				15	14	13	12	11	10	9	8	7	6	5	4	3	2	1	0
CIO 2001	00	0	0	Command								Communications specification				Data order			
CIO 2002	00	10		First read address															
CIO 2003	00	0A		Number of read bytes															
CIO 2004	10	00		Read data storage location (rightmost 4 digits)															
CIO 2005	0	0	00	Data storage area				Bank designation*				Read data storage location (leftmost 2 digits)							
CIO 2006	00	00		---															

Note *: Always 0 when DM is specified. ---: Ignored.

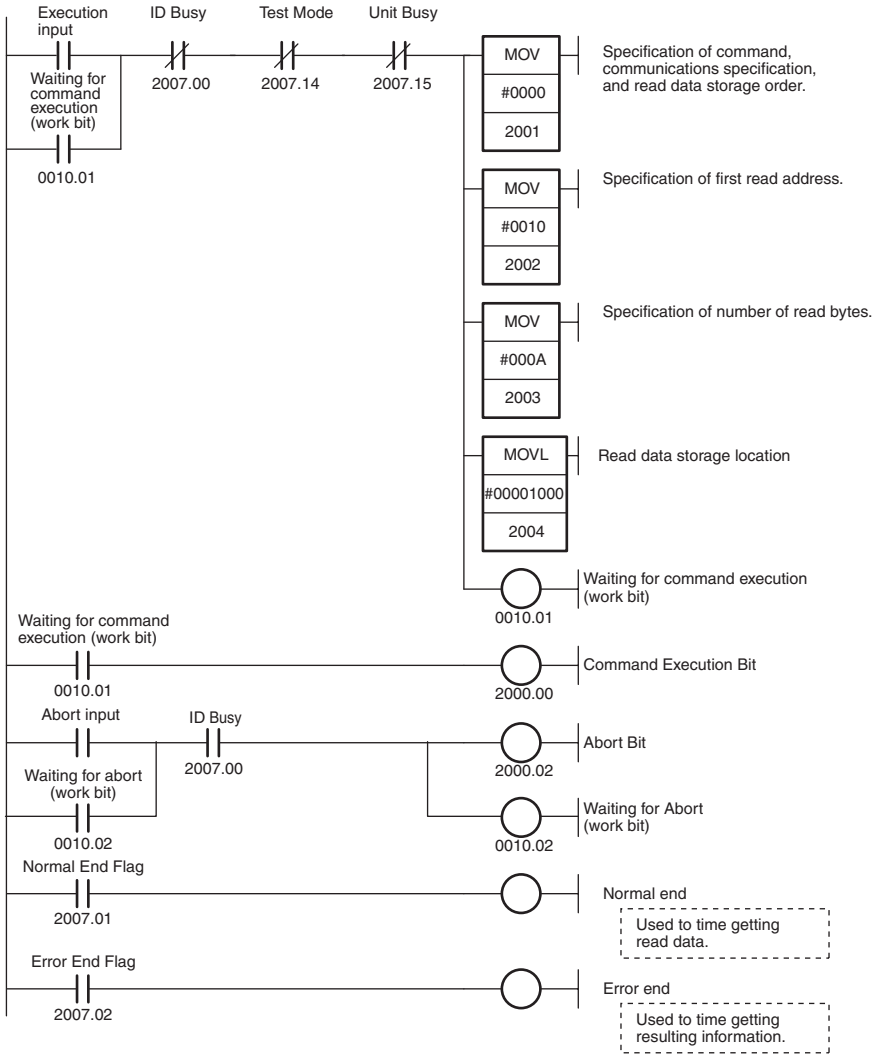

2-3 Part Names and Functions

2-3-1 Part Names

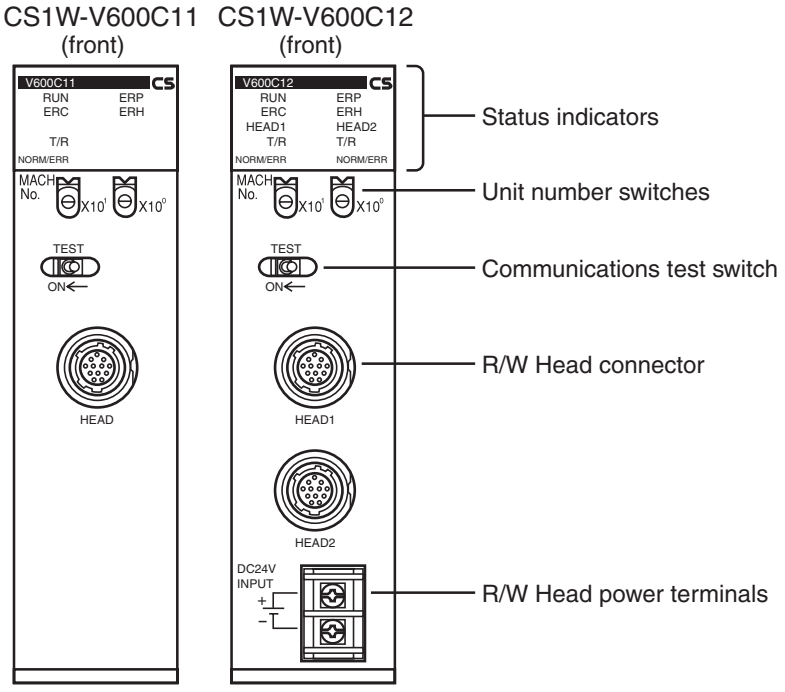

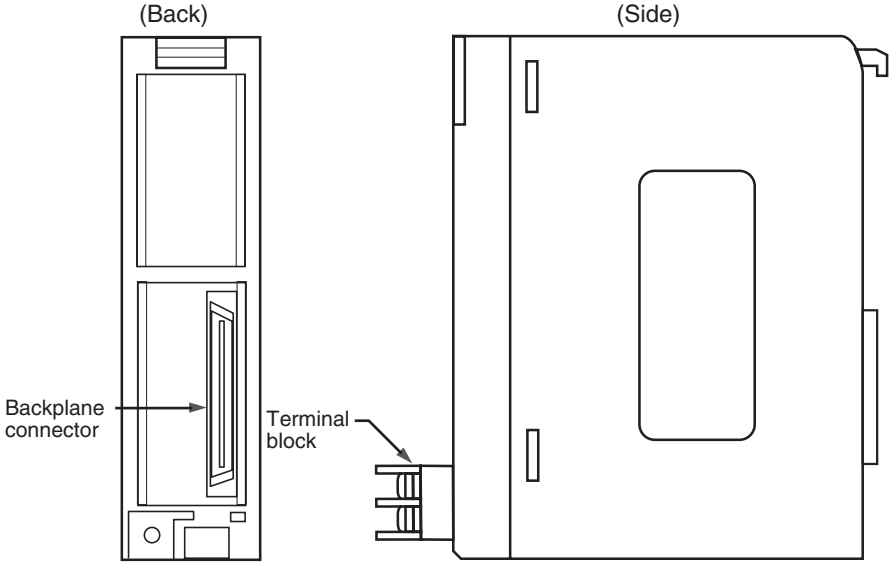

2-3-2 Indicators

Indicators show the operating status of the Unit. The relationship between the indicator status and the Unit status is shown in the following table.

Indicator		Name	Color	Meaning	
RUN		RUN	Green	Lit	The ID Sensor Unit is operating normally.
				Not lit	The ID Sensor Unit is stopped.
ERC (Error I/O Controller)		Unit error	Red	Lit	An error has occurred in the ID Sensor Unit.
				Not lit	No error has occurred in the ID Sensor Unit.
ERH (Error at Host)		CPU Unit error	Red	Lit	An error has occurred in the CPU Unit.
				Not lit	No error has occurred in the CPU Unit.
ERP (Head Power Error)		Head power error	Red	Lit	An error has occurred in the power supply to the R/W Head.
				Not lit	The power supply to the R/W Head is normal.
Head 1	T/R	Communicating	Yellow	Lit	Communications are active.
	NORM/ERR	Normal end	Green	Lit	Communications with the Data Carrier ended normally.
		Error end	Red	Lit	Communications with the Data Carrier ended in an error.
Head 2	T/R	Communicating	Yellow	Lit	Communications are active.
	NORM/ERR	Normal end	Green	Lit	Communications with the Data Carrier ended normally.
		Error end	Red	Lit	Communications with the Data Carrier ended in an error.

2-3-3 Unit Number Switches

Data exchange between the CPU Unit and ID Sensor Unit is performed using words allocated to the Unit in the Special I/O Unit Area and in the DM Area. The words allocated to the ID Sensor Unit in these two areas are determined by the setting of the unit number switches on the Unit's front panel.

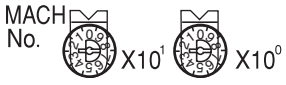

		CS1W-V600C11		CS1W-V600C12	
Switch No.	**Unit No.**	**Words allocated in Special I/O Unit Area**	**Words allocated in DM Area**	**Words allocated in Special I/O Unit Area**	**Words allocated in DM Area**
0	Unit 0	CIO 2000 to CIO 2009	D20000 to D20099	CIO 2000 to CIO 2019	D20000 to D20199
1	Unit 1	CIO 2010 to CIO 2019	D20100 to D20199	CIO 2010 to CIO 2029	D20100 to D20299
:	:	:	:	:	:
94	Unit 94	CIO 2940 to CIO 2949	D29400 to D29499	CIO 2940 to CIO 2959	D29400 to D29599
95	Unit 95	CIO 2950 to CIO 2959	D29500 to D29599	(Cannot be set)	

2-3-4 Communications Test Switch

The communications test switch on the Unit's front panel is used to switch between Normal Mode and Test Mode.

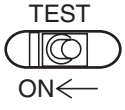

Status	Description
OFF	Normal status (factory setting)
ON	Communications test

2-4 Connections and Wiring

2-4-1 Connecting R/W Heads

Connection Method

1,2,3...

1. Holding the rubber molding on the connector, align the connector with the key groove and press in.
2. Press in on the connector until it locks in place.

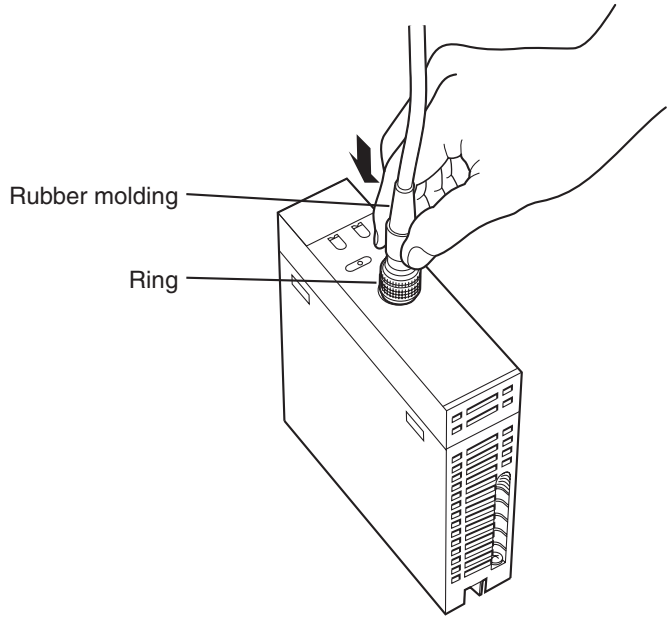

Note The connector will not lock into place if you hold onto the ring. Always hold onto the rubber molding.

Removal Method

Hold onto the ring and pull straight out.

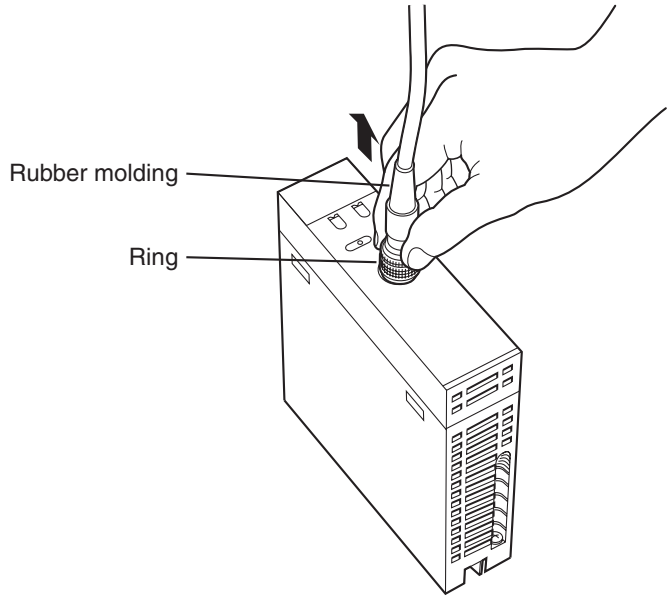

Note The connector cannot be removed if you hold onto the rubber molding. Never pull on the cable with excessive force. The conductors may be broken or damaged.

2-4-2 Wiring the External Power Supply (CS1W-V600C12 Only)

Wiring the power supply as shown below.

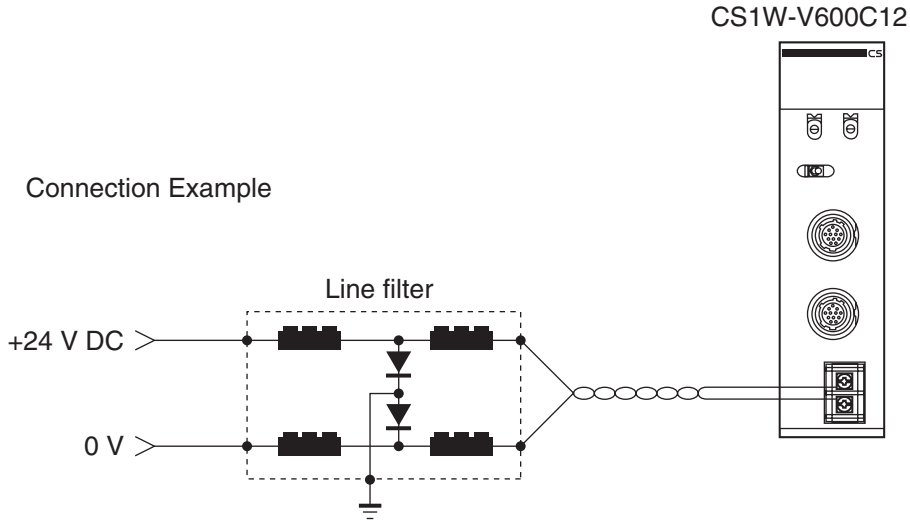

M3 self-lifting screws are used as the connection terminals for the power supply. When necessary, use the following crimp terminals. The tightening torque is approximately 0.59 N·m.

Examples of Applicable Crimp Connectors

Manufacturer	Model number	Applicable wire size	Shape
J.S.T Mfg. Co., Ltd.	1.25-N3A	AWG24 to 16	Forked
J.S.T Mfg. Co., Ltd.	1.25-Y3A		

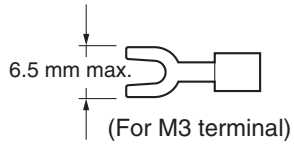

Recommended DC Power Supplies (Miniature, by OMRON)

Model number	Output capacity	Input voltage
S82K-03024	24 V DC, 1.3 A	100/200 V AC
S82J-0224	24 V DC, 1.1 A	100 V AC

Note

1. Although adequate measures have been taken inside the I/O Sensor Unit for noise entering on the power supply line, supplying power through a line filter can be used to greatly attenuate ground noise.
2. Although the rated power consumption of the CS1W-V600C12 is 360 mA at 24 V DC, be sure to consider the surge current when determining capacities.

2-4-3 Wiring for Safety and Noise Immunity

R/W Head Cables and I/O Signal Lines

Wire the R/W Head cables and I/O signal lines in separate ducts from power circuit cables both inside and outside the control panel.

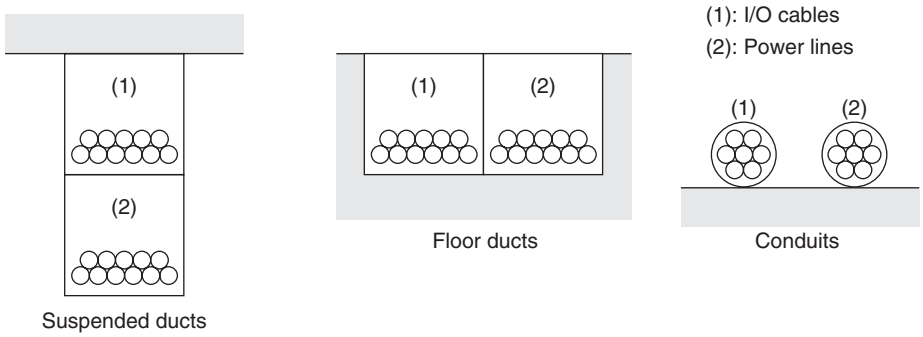

If the same ducts must be used, shielded cables can be used to increase resistance to noise. If a shielded cable is used, connect one end of the shield to ground.

Countermeasures for Inductive Loads

If I/O is connected to an inductive load, connect a surge killer or diode in parallel with the load.

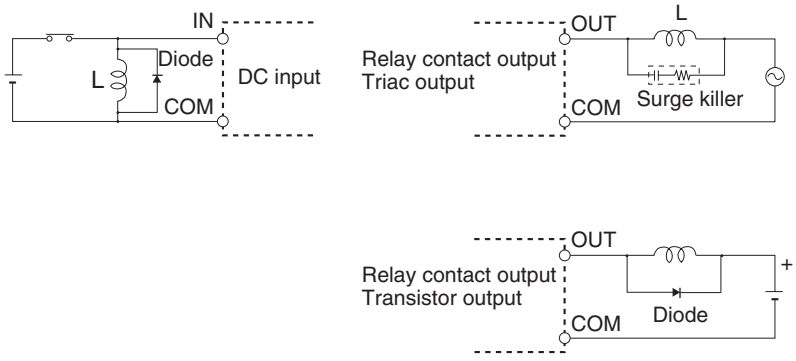

Note Use surge killers and diodes that meet the following conditions:

Surge Killers

Resistance: 50 Ω
Capacitance: 0.47 μF
Voltage: 200 V

Diodes

Inrush withstand voltage: 3 times load voltage min.
Average rectified current: 1 A

Noise Countermeasures for External Wiring

Consider the following items when wiring external lines, such as the R/W Head cables, I/O lines, power supply lines, and high-power lines.

- When using multiconductor cables for signal lines, do not use the same cable for both I/O lines and other control lines.

- When Racks are installed in parallel with each other, keep them separated by at least 300 mm.

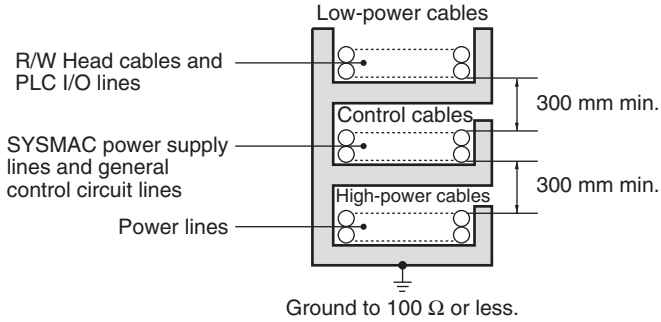

- When placing cables in the same duct, separate them with grounded iron plates.

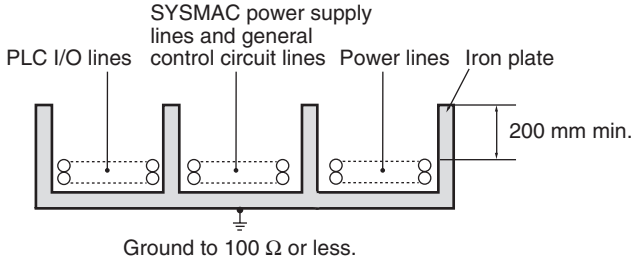

SECTION 3
CJ-series ID Sensor Units

This section describes the specifications, operation, and installation of ID Sensor Units for CJ-series PLCs.

3-1 Specifications 24
3-1-1 General Specifications 24
3-1-2 Performance Specifications 24
3-1-3 Communications Function Specifications 25
3-2 Operating Procedure 26
3-2-1 Overall Procedure 26
3-2-2 Operating Procedure Example 27
3-3 Part Names and Functions 31
3-3-1 Part Names 31
3-3-2 Indicators 32
3-3-3 Unit Number Switches 32
3-3-4 Communications test Switch 32
3-4 Connections and Wiring 33
3-4-1 Connecting R/W Heads 33
3-4-2 Wiring for Safety and Noise Immunity 34

3-1 Specifications

3-1-1 General Specifications

General specifications conform to those of SYSMAC CJ-series Special I/O Units.

3-1-2 Performance Specifications

<table>
<tr><th></th><th colspan="2">CJ1W-V600C11</th><th colspan="2">CJ1W-V600C12</th></tr>
<tr><td>Unit classification</td><td colspan="4">Special I/O Unit</td></tr>
<tr><td>Influence on CPU Unit's cycle time</td><td colspan="2">0.15 ms</td><td colspan="2">0.3 ms</td></tr>
<tr><td>Internal current consumption</td><td colspan="2">5 V DC, 260 mA max.; 24 V DC, 120 mA max.</td><td colspan="2">5 V DC, 320 mA max.; 24 V DC, 240 mA max.</td></tr>
<tr><td>Dimensions</td><td colspan="4">31 × 90 × 65 mm (W×H×D)</td></tr>
<tr><td>Weight</td><td colspan="2">120 g max.</td><td colspan="2">130 g max.</td></tr>
<tr><td>Mounting location</td><td colspan="4">CJ-series Rack or CJ-series Expansion Rack
(Cannot be mounted to C200H Expansion I/O Racks or SYSMAC BUS Slave Racks.)</td></tr>
<tr><td>No. of Units per Rack</td><td colspan="2">4 Units maximum per Rack</td><td colspan="2">2 Units maximum per Rack</td></tr>
<tr><td>Connectable Heads</td><td colspan="2">V600-series R/W Heads
(V600-H□□) 1 Head</td><td colspan="2">V600-series R/W Heads
(V600-H□□) 1 or 2 Heads</td></tr>
<tr><td>Applicable Data Carriers</td><td colspan="4">V600-series Data Carriers (V600-D□□)</td></tr>
<tr><td>No. of allocated unit numbers</td><td colspan="2">1 unit number</td><td colspan="2">2 unit numbers</td></tr>
<tr><td>No. of allocated words</td><td colspan="2">10 words</td><td colspan="2">20 words</td></tr>
<tr><td>Control protocol</td><td colspan="4">Special protocol</td></tr>
<tr><td rowspan="3">Data exchange methods with CPU Unit</td><td rowspan="2">Special I/O Unit Area
CIO 2000 to CIO 2959</td><td rowspan="2">Constant data exchange of 10 words/Unit</td><td>CPU Unit
→ ID Sensor Unit</td><td>Unit Controls, Communications Processing Specification, Data Storage Area Specification</td></tr>
<tr><td>ID Sensor Unit
→ CPU Unit</td><td>Unit information, Results Information, Processing Results Monitor</td></tr>
<tr><td>Special I/O Unit words in DM Area
D20000 to D29599</td><td>100 words/Unit transferred when power is turned ON or when restarting the Unit</td><td>CPU Unit
→ ID Sensor Unit</td><td>System Settings,
Auto Wait Time Setting</td></tr>
<tr><td>Data transfer quantity</td><td colspan="2">2,048 bytes max.
(160 bytes/scan)</td><td colspan="2">2,048 bytes max./Head
(160 bytes/scan)</td></tr>
<tr><td>Operating modes</td><td colspan="4">Normal Mode/Test Mode (changed with communications test switch)</td></tr>
<tr><td>Diagnostic functions</td><td colspan="4">(1) ID Sensor Unit error
(2) Communications error detection with Data Carriers
(3) Head 24-V power supply error</td></tr>
</table>

3-1-3 Communications Function Specifications

	CJ1W-V600C11	CJ1W-V600C12
Communications frequency	530 kHz	
Communications control	(1) Changing EEPROM (battery-free) Data Carrier communications mode (distance priority or time priority) (2) Write verification (3) Auto Wait Time Setting	
Commands	Read Write Bit Set/Bit Clear Mask Bit Write Calculation Write Data Fill Data Check Number of Writes Control	Read Write Bit Set/Bit Clear Mask Bit Write Calculation Write Data Fill Data Check Number of Writes Control Copy
Communications specification	Trigger, Single auto, Repeat auto	

3-2 Operating Procedure

3-2-1 Overall Procedure

The operating procedure for an ID Sensor Unit is shown in the following flowchart.

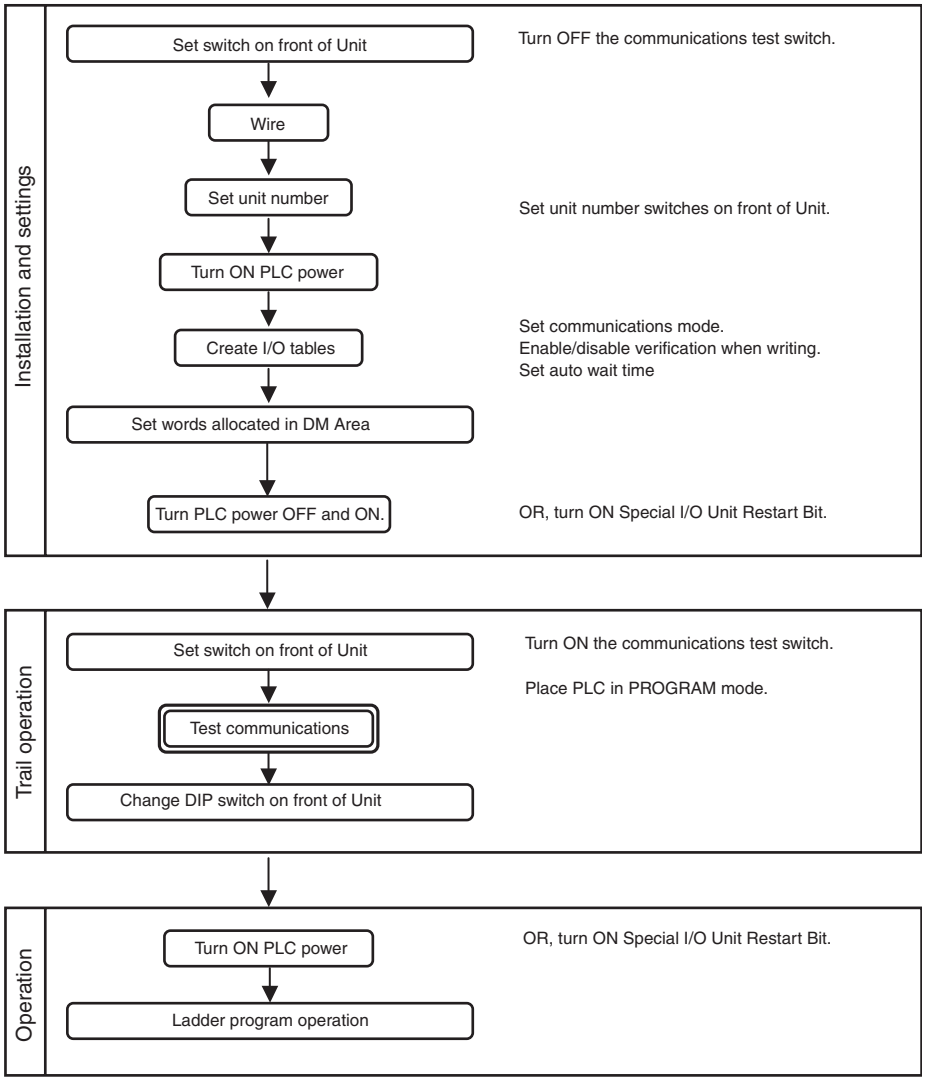

Note

1. When using CX-Programmer V3.0 or later with the CJ1W-V600C12, “I” will be displayed before addresses for inputs in the ladder diagram and “Q” will be displayed before addresses for outputs for operation data. In the CX-Programmer’s **I/O Table** Window, select ***SIOU/C200H ASCII Unit (A)*** and then, from the **Enter SIOU Details** Window, set the *Address per Unit* to 2, the *Input Words* to 3, and the *Output Words* to 7, and select the *Repeat IN/OUT for each Address per Unit* option.
2. When using CX-Programmer V2.0 or later with the CJ1W-V600C11, “I” will be displayed in the ladder diagram before address for inputs and “Q” will be displayed before addresses for outputs for operation data.

3-2-2 Operating Procedure Example

The following is an operating procedure example for the following conditions.

Reading 10 Bytes of Data from Data Carrier Address 0010 Using a Trigger

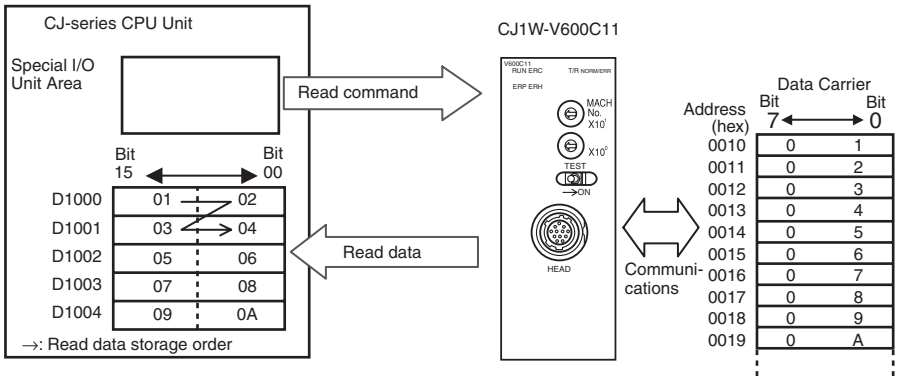

Special I/O Unit Area Settings

Unit No.: 00
Command: Read
Communications specification: Trigger
Read data storage order: Leftmost → Rightmost
First Data Carrier read address: 0010 (hex)
Number of Data Carrier read bytes: 10 bytes
Read data storage destination: D1000 to D1004

ID Sensor Unit Settings

1,2,3... 1. Communications Test Switch (Set on Unit's front panel.)

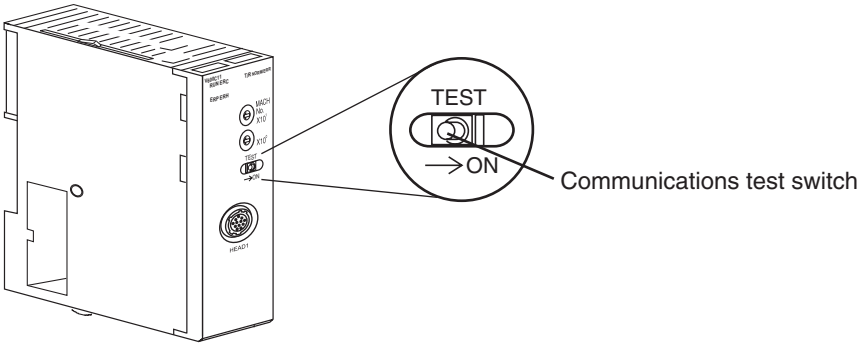

2. Mounting and Installation

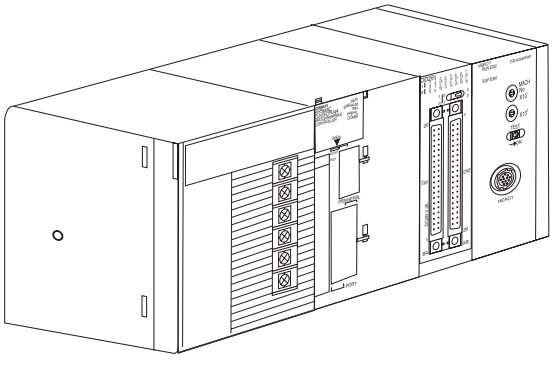

3. Unit No. Setting

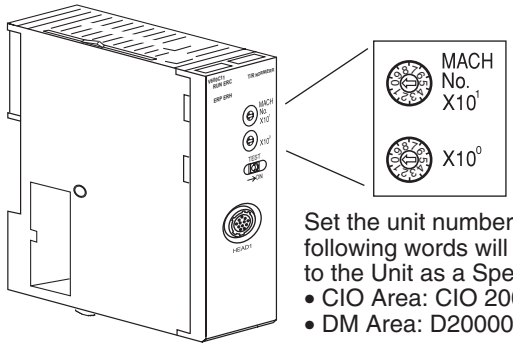

Set the unit number to 0, and the following words will be allocated to the Unit as a Special I/O Unit.
- CIO Area: CIO 2000 to CIO 2009
- DM Area: D20000 to D20099

4. PLC Power Supply ON

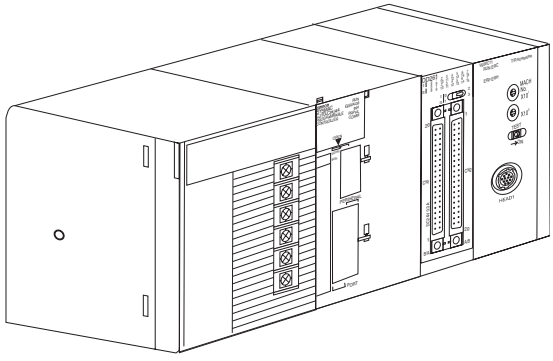

Creating I/O Tables

Always create the I/O tables after turning ON the PLC power supply. The I/O tables can be created from the Programming Console or CX-Programmer.

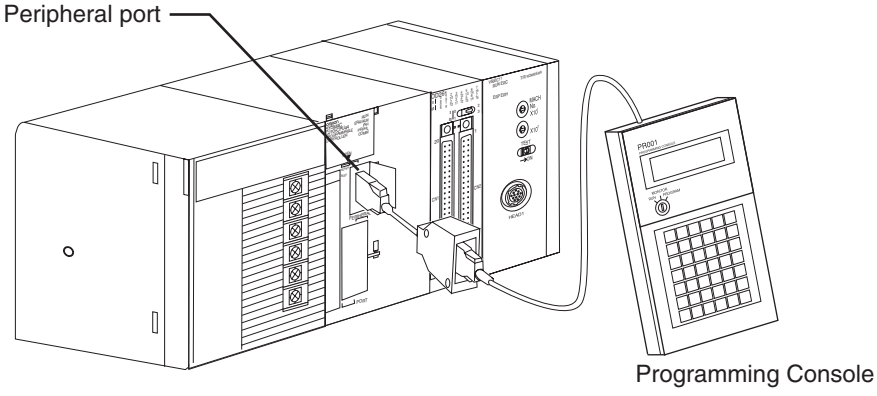

Initial Settings

1,2,3... 1. Make the settings in the words allocated to Special I/O Units in the DM Area (refer to page 41).

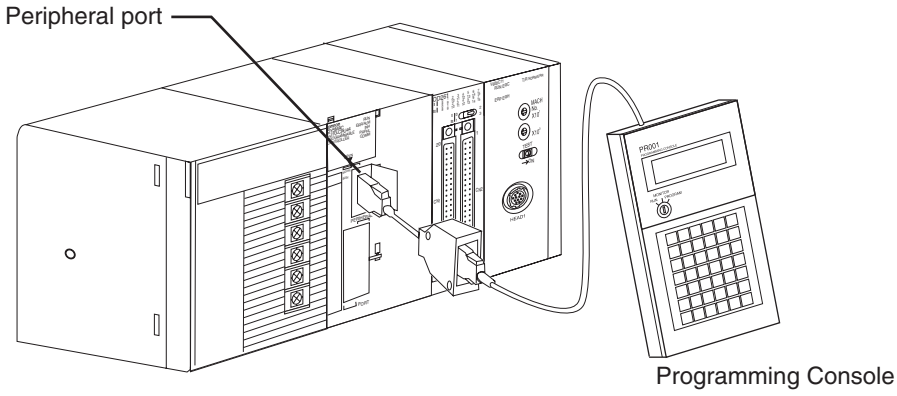

First word allocated to Unit in DM Area: m = D20000 + (100 × 0) = D20000

DM address	Contents				Meaning															
					15	14	13	12	11	10	9	8	7	6	5	4	3	2	1	0
D20000	0	0	0	0	Not used				Communications test switch enabled				Verification for writing				Communications mode: Distance			
D20001	0000				Auto Wait Time Setting: Infinite															

2. PLC Power Supply OFF and ON (or turn ON the Unit Restart Bit)

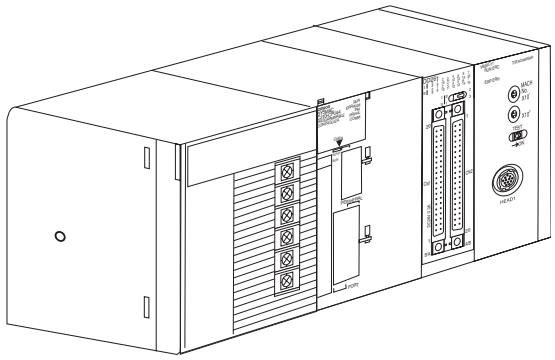

Ladder Programming

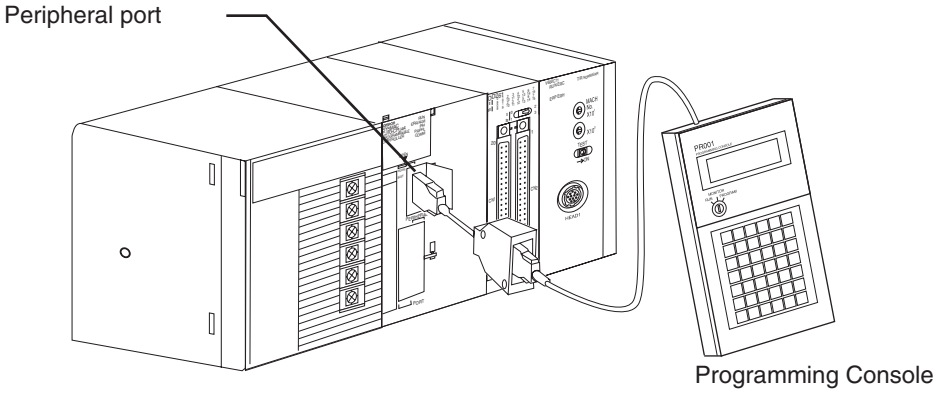

Set the Command, Communications Specification, Read Data Storage Order, First Data Carrier Read Address, Number of Bytes to Read, and Read Data Storage Destination in words (n + 1) to (n + 6) allocated in the Special I/O Unit Area (here, CIO 2001 to CIO 2006).

First word allocated to Unit in CIO Area: CIO 2000 + 10 × 0 = CIO 2000

Word address	Contents			Meaning															
				15	14	13	12	11	10	9	8	7	6	5	4	3	2	1	0
CIO 2001	00	0	0	Command								Communications specification				Data order			
CIO 2002	00	10		First read address															
CIO 2003	00	0A		Number of read bytes															
CIO 2004	10	00		Read data storage location (rightmost 4 digits)															
CIO 2005	0	0	00	Data storage area				Bank designation*				Read data storage location (leftmost 2 digits)							
CIO 2006	00	00		---															

Note *: Always 0 when DM is specified. ---: Ignored.

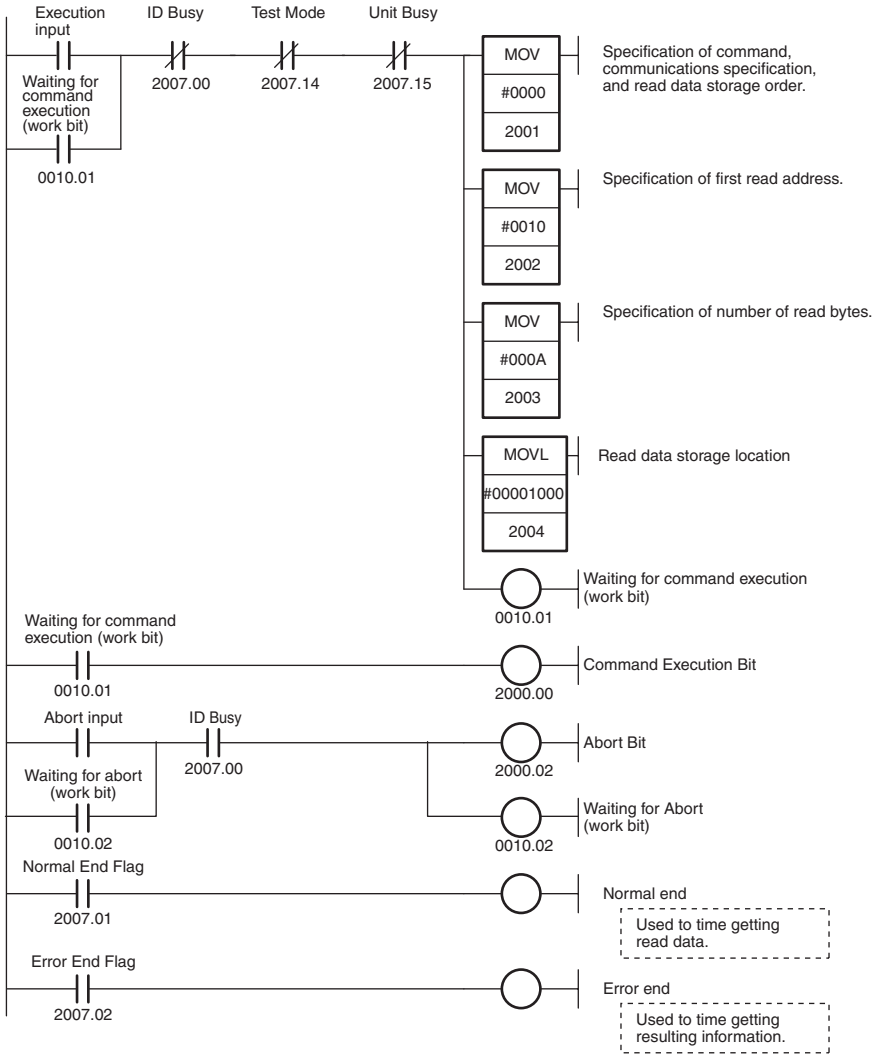

3-3 Part Names and Functions

3-3-1 Part Names

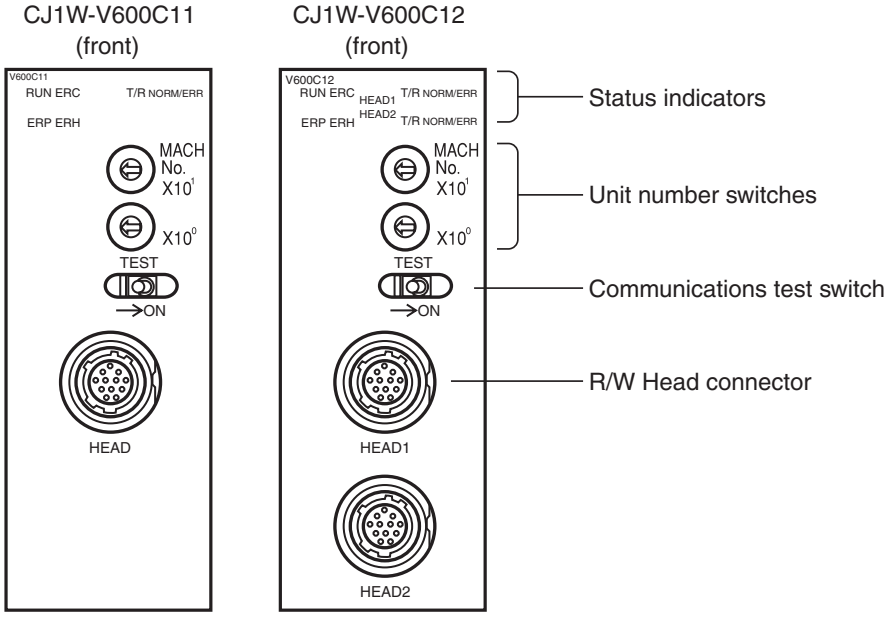

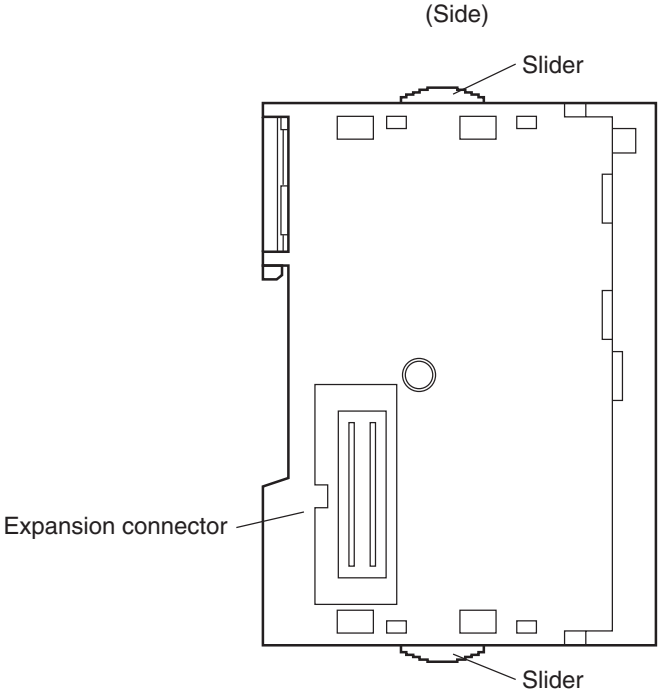

3-3-2 Indicators

The indicators show the operating status of the Unit. The relationship between the indicator status and the Unit status is shown in the following table.

Indicator		Name	Color	Meaning	
RUN		RUN	Green	Lit	The ID Sensor Unit is operating normally.
				Not lit	The ID Sensor Unit is stopped.
ERC (Error I/O Controller)		Unit error	Red	Lit	An error has occurred in the ID Sensor Unit.
				Not lit	No error has occurred in the ID Sensor Unit.
ERH (Error at Host)		CPU Unit error	Red	Lit	An error has occurred in the CPU Unit.
				Not lit	No error has occurred in the CPU Unit.
ERP (Head Power Error)		Head power error	Red	Lit	An error has occurred in the power supply to the R/W Head.
				Not lit	The power supply to the R/W Head is normal.
Head 1	T/R	Communicating	Yellow	Lit	Communications are active.
	NORM/ERR	Normal end	Green	Lit	Communications with the Data Carrier ended normally.
		Error end	Red	Lit	Communications with the Data Carrier ended in an error.
Head 2	T/R	Communicating	Yellow	Lit	Communications are active.
	NORM/ERR	Normal end	Green	Lit	Communications with the Data Carrier ended normally.
		Error end	Red	Lit	Communications with the Data Carrier ended in an error.

3-3-3 Unit Number Switches

Data exchange between the CPU Unit and ID Sensor Unit is performed using words allocated to the Unit in the Special I/O Unit Area and in the DM Area. The words allocated to the ID Sensor Unit in these two areas are determined by the setting of the unit number switches on the Unit's front panel.

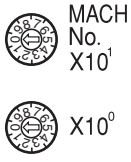

		CJ1W-V600C11		CJ1W-V600C12	
Switch No.	**Unit No.**	**Words allocated in Special I/O Unit Area**	**Words allocated in DM Area**	**Words allocated in Special I/O Unit Area**	**Words allocated in DM Area**
0	Unit 0	CIO 2000 to CIO 2009	D20000 to D20099	CIO 2000 to CIO 2019	D20000 to D20199
1	Unit 1	CIO 2010 to CIO 2019	D20100 to D20199	CIO 2010 to CIO 2029	D20100 to D20299
:	:	:	:	:	:
94	Unit 94	CIO 2940 to CIO 2949	D29400 to D29499	CIO 2940 to CIO 2959	D29400 to D29599
95	Unit 95	CIO 2950 to CIO 2959	D29500 to D29599	(Cannot be set)	

3-3-4 Communications test Switch

The communications test switch on the Unit's front panel is used to switch between Normal Mode and Test Mode.

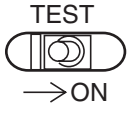

Status	Description
OFF	Normal status (factory setting)
ON	Communications test

3-4 Connections and Wiring

3-4-1 Connecting R/W Heads

Connection Method

1,2,3...

1. Holding the rubber molding on the connector, align the connector with the key groove and press in.
2. Press in on the connector until it locks in place.

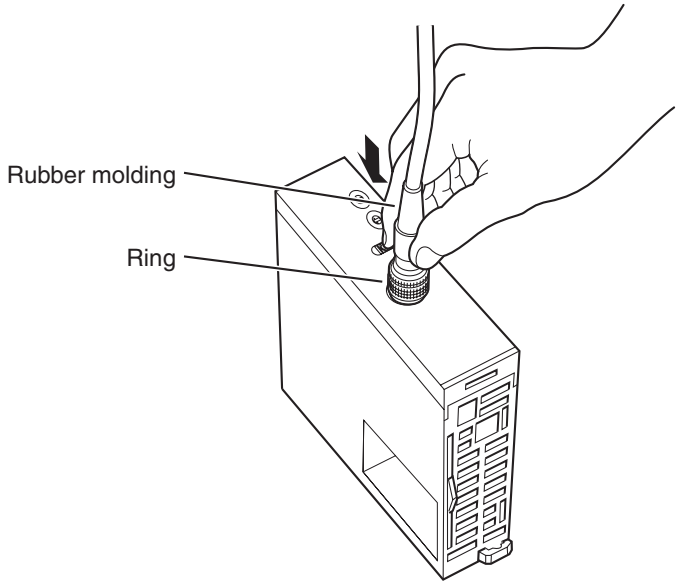

Note The connector will not lock into place if you hold onto the ring. Always hold onto the rubber molding.

Removal Method

Hold onto the ring and pull straight out.

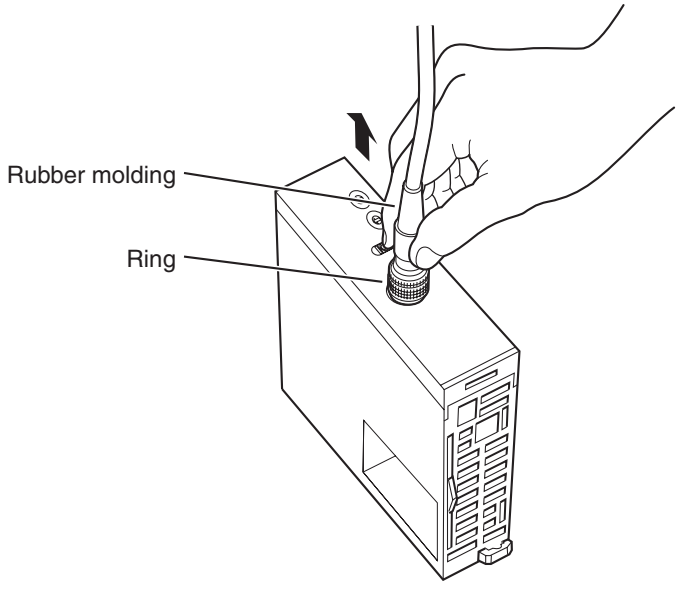

Note The connector cannot be removed if you hold onto the rubber molding. Never pull on the cable with excessive force. The conductors may be broken or damaged.

3-4-2 Wiring for Safety and Noise Immunity

R/W Head Cables and I/O Signal Lines

Wire the R/W Head cables and I/O signal lines in separate ducts from power circuit cables both inside and outside the control panel.

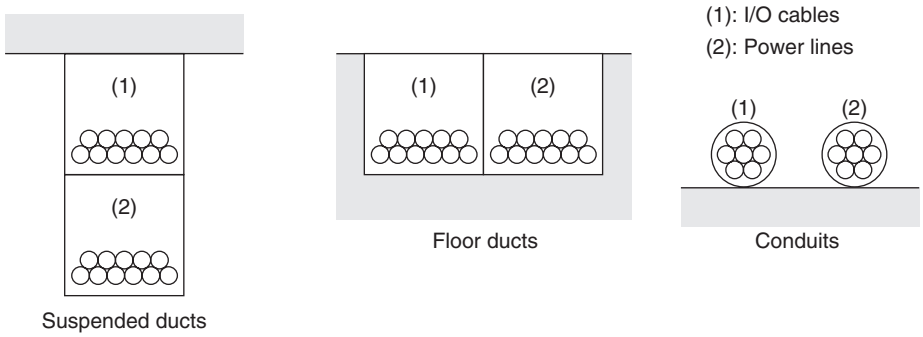

If the same ducts must be used, shielded cables can be used to increase resistance to noise. If a shielded cable is used, connect one end of the shield to ground.

Countermeasures for Inductive Loads

If I/O is connected to an inductive load, connect a surge killer or diode in parallel with the load.

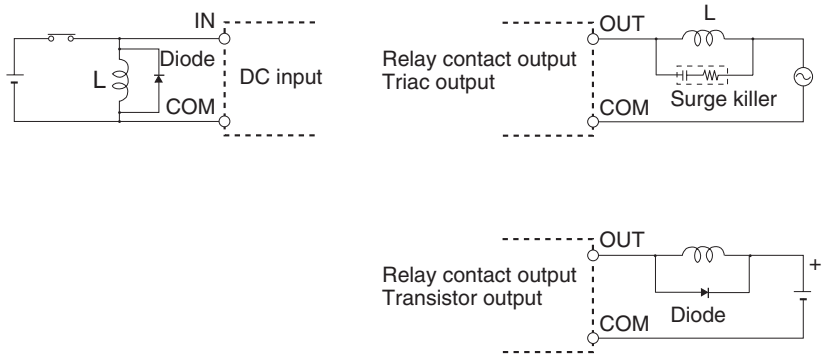

Note Use surge killers and diodes that meet the following conditions:

Surge Killers

Resistance: 50 Ω
Capacitance: 0.47 μF
Voltage: 200 V

Diodes

Inrush withstand voltage: 3 times load voltage min.
Average rectified current: 1 A

Noise Countermeasures for External Wiring

Consider the following items when wiring external lines, such as the R/W Head cables, I/O lines, power supply lines, and high-power lines.

- When using multiconductor cables for signal lines, do not use the same cable for both I/O lines and other control lines.

- When Racks are installed in parallel with each other, keep them separated by at least 300 mm.

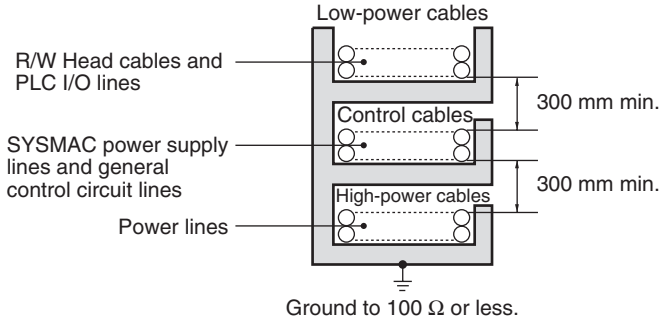

- When placing cables in the same duct, separate them with grounded iron plates.

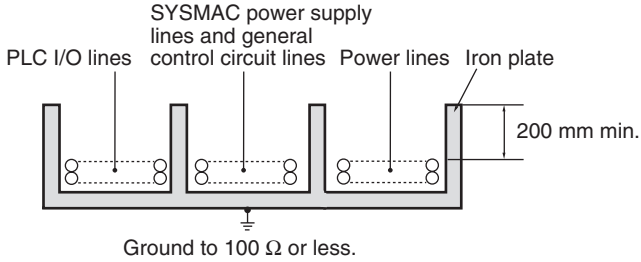

SECTION 4
Data Exchange with the CPU Unit

This section describes the methods used to exchange data with the CPU Unit and the data that is exchanged.

4-1 Outline of Data Exchange 38
4-1-1 Unit Number Setting 39
4-1-2 Special I/O Unit Restart Bits 40
4-2 Initial Settings Data 41
4-2-1 DM Area Allocations and Contents 41
4-2-2 DM Area Contents (Same for Normal or Test Mode) 42
4-3 I/O Data Allocations 43
4-3-1 Special I/O Unit Area Allocations and Contents 43
4-3-2 Special I/O Unit Bit Allocations 44

4-1 Outline of Data Exchange

Data is exchanged between the CS/CJ-series CPU Unit and CS1W-V600C11/C12 or CJ1W-V600C11/C12 ID Sensor Unit through I/O words allocated in the Special I/O Unit Area and initial setting words allocated in the DM Area.

I/O Data

Words are allocated in the Special I/O Unit Area of the CPU Unit for ID Sensor Unit I/O data, including Unit Controls, commands, results information, etc., according to the unit number. This data is exchanged continuously during the I/O refresh period.

Initial Settings Data

Words are allocated to the ID Sensor Unit as a Special I/O Unit Area in the DM Area of the CPU Unit for ID Sensor Unit initial settings, including the System Settings and Auto Wait Time Setting, etc., according to the unit number. This data is transferred when the power supply is turned ON or when restarting the Unit.

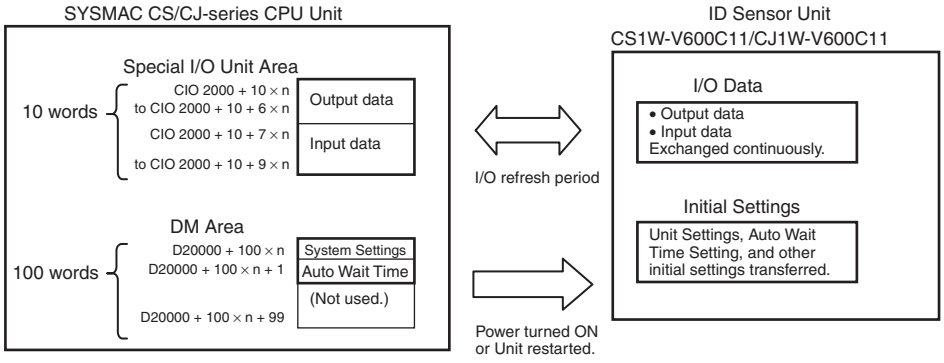

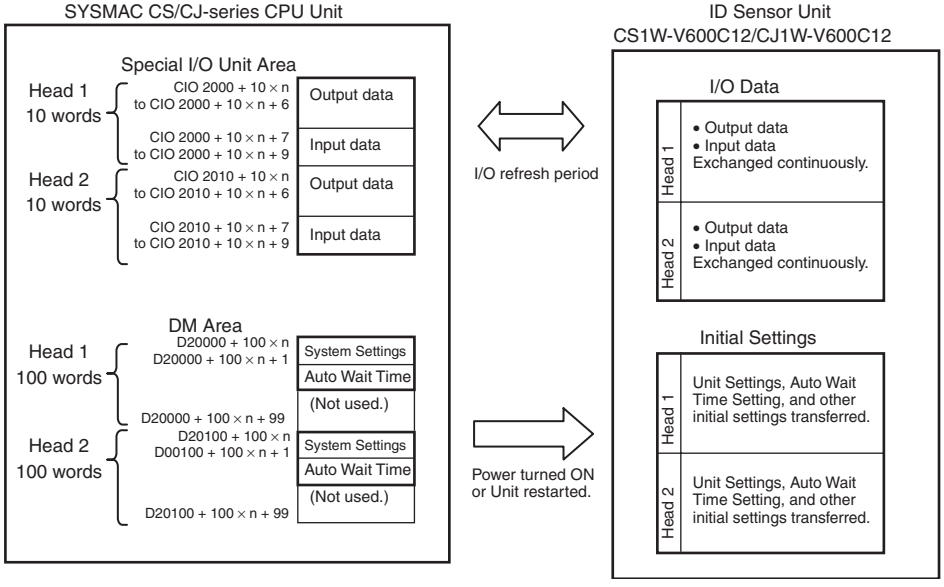

4-1-1 Unit Number Setting

The words allocated to the ID Sensor Unit in the Special I/O Unit Area and DM Area are determined by the unit number setting on the Unit's front panel.

CS1W-V600C11/C12

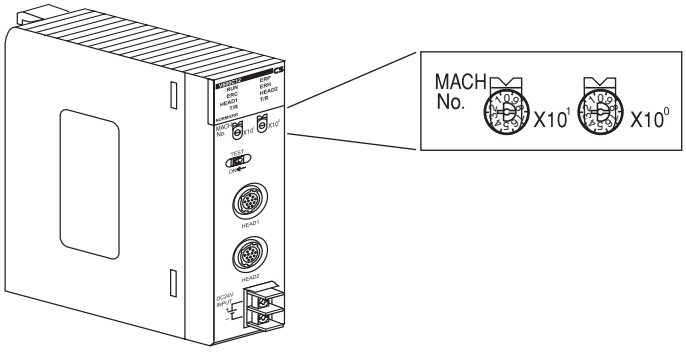

CJ1W-V600C11/C12

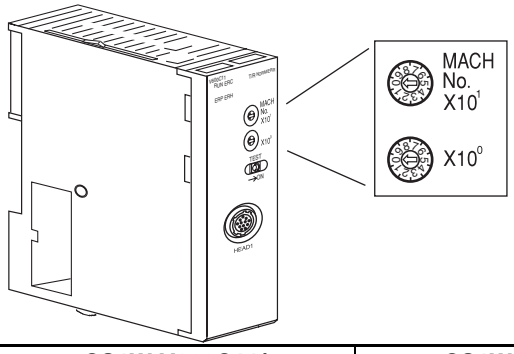

Switch No.	Unit No.	CS1W-V600C11/ CJ1W-V600C11		CS1W-V600C12/ CJ1W-V600C12	
		Words allocated in Special I/O Unit Area	Words allocated in DM Area	Words allocated in Special I/O Unit Area	Words allocated in DM Area
0	Unit 0	CIO 2000 to CIO 2009	D20000 to D20099	CIO 2000 to CIO 2019	D20000 to D20199
1	Unit 1	CIO 2010 to CIO 2019	D20100 to D20199	CIO 2010 to CIO 2029	D20100 to D20299
:	:	:	:	:	:
94	Unit 94	CIO 2940 to CIO 2949	D29400 to D29499	CIO 2940 to CIO 2959	D29400 to D29599
95	Unit 95	CIO 2950 to CIO 2959	D29500 to D29599	(Cannot be set)	

Note

1. If the same unit number is set for more than one Special I/O Unit, a fatal error (*No. duplication error* on CX-Programmer or *Unit No. Duplication* on Programming Console), and the PLC will not operate.
2. When a Double-head ID Sensor Unit (CS1W-V600C12,CJ1W-V600C12) is used, two unit numbers are allocated.

4-1-2 Special I/O Unit Restart Bits

Unit operation can be restarted after DM Area settings have been changed or after an error has been corrected by turning the power supply to the PLC OFF and ON or by turning ON the Special I/O Unit Restart Bit.

CS-series Special I/O Unit Restart Bits

Bit address	Function	
A50200	Unit 0 Restart Bit	The Unit will be restarted when the corresponding bit is turned ON.
A50201	Unit 1 Restart Bit	
⋮	⋮	
A50215	Unit 15 Restart Bit	
A50300	Unit 16 Restart Bit	
⋮	⋮	
A50715	Unit 95 Restart Bit	

CJ-series Special I/O Unit Restart Bits

Bit address	Function	
A50200	Unit 0 Restart Bit	The Unit will be restarted when the corresponding bit is turned ON.
A50201	Unit 1 Restart Bit	
⋮	⋮	
A50215	Unit 15 Restart Bit	
A50300	Unit 16 Restart Bit	
⋮	⋮	
A50715	Unit 95 Restart Bit	

Exchanged data will be all zeros while the Unit is being restarted.

Note Replace the ID Sensor Unit if an error cannot be cleared even after turning the power supply OFF and ON or after turning ON the Special I/O Unit Restart Bit.

4-2 Initial Settings Data

4-2-1 DM Area Allocations and Contents

The initial settings for the ID Sensor Unit are performed using the words allocated to the ID Sensor Unit as a Special I/O Unit in the DM Area.

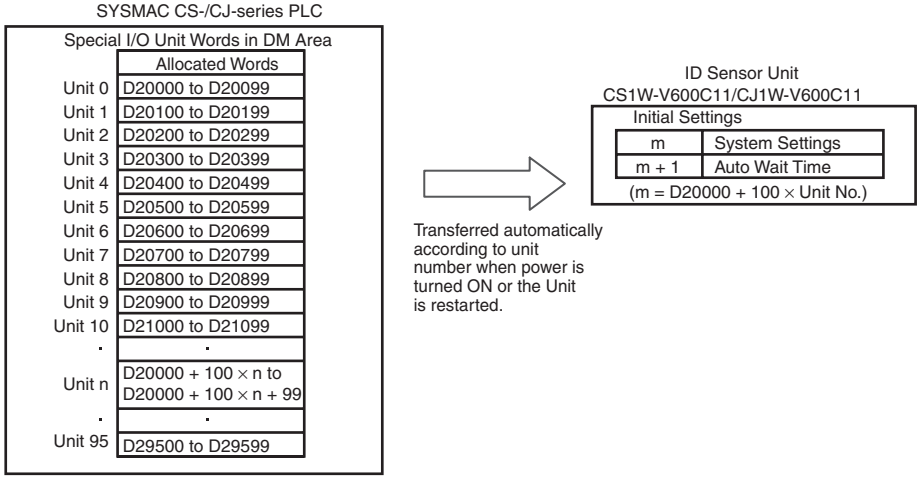

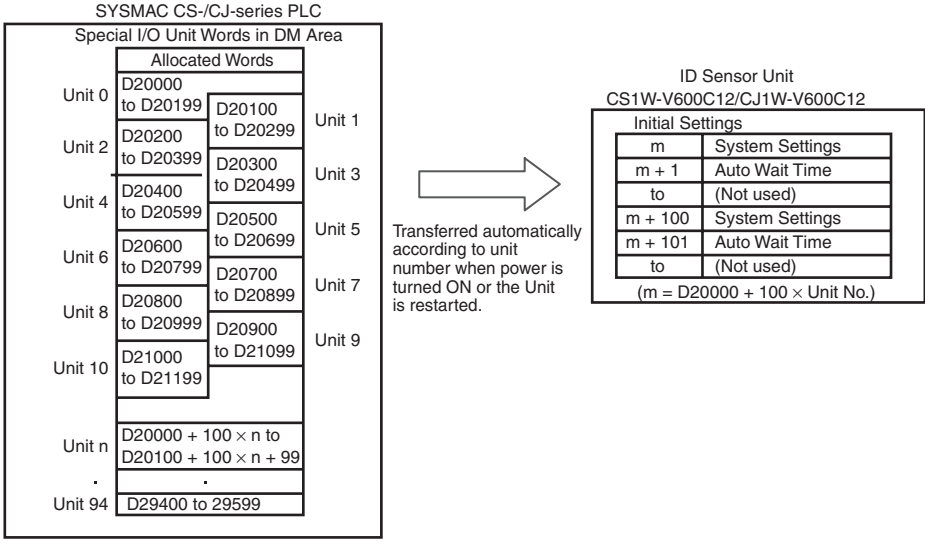

Note

1. The words allocated to the ID Sensor Unit in the DM Area are determined by the setting of the unit number switches on the Unit's front panel. Set unit numbers so that the same words are not allocated to more than one Unit. (Refer to page 39 for the setting method.)
2. If the same unit number is set for more than one Special I/O Unit, a fatal error (*No. duplication error* on CX-Programmer or *Unit No. Duplication* on Programming Console), and the PLC will not operate.

4-2-2 DM Area Contents (Same for Normal or Test Mode)

The following initial settings are set in the words allocated in the DM Area.

DM Area address		Bit No.	Type	Description	Setting	Reference
Head 1 of CS1W-V600C11, CS1W-V600C12, CJ1W-V600C11, or CJ1W-V600C12	**Head 2 of CS1W-V600C12 or CJ1W-V600C12**					
m	m + 100	12 to 15	System Settings	Not used	---	---
		08 to 11		Operating mode switch setting	0: Enabled (1-digit BCD) 1: Disabled (1-digit BCD)	Page 56
		04 to 07		Setting for write verification	0: Verification (1-digit BCD) 1: No verification (1-digit BCD)	Page 56
		00 to 03		Communications mode setting	0: Communications distance priority (1-digit BCD) 1: Communications time priority (1-digit BCD)	Page 57
m + 1	m + 101	00 to 15	Auto Wait Time Setting	The Data Carrier timeout time when the Communications Specification is single auto or repeat auto. A Data Carrier Missing Error will be returned if this value is exceeded.	0001 to 9999 (× 0.1 s) 0000: Infinite	Page 58

Note First word allocated to Unit in DM Area: m = D20000 + 100 × unit No.

4-3 I/O Data Allocations

4-3-1 Special I/O Unit Area Allocations and Contents

I/O data exchange for the ID Sensor Unit is performed using the words allocated to the ID Sensor Unit as a Special I/O Unit in the Special I/O Unit Area.

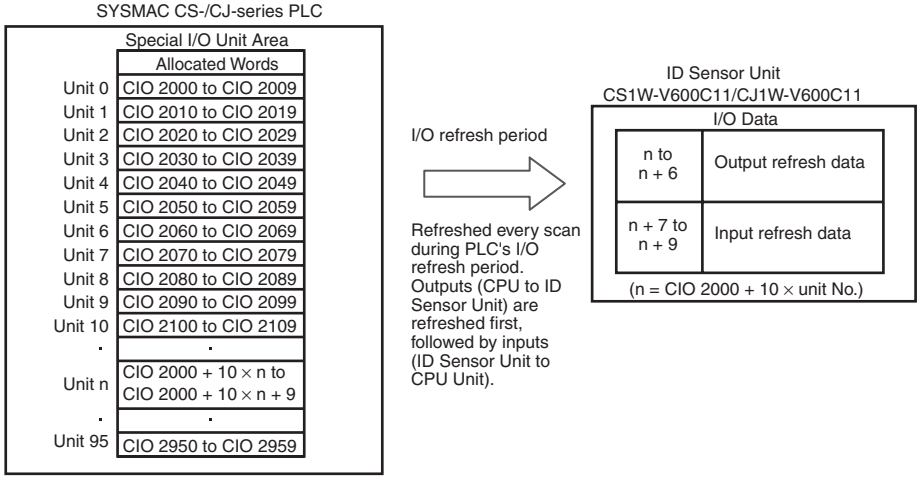

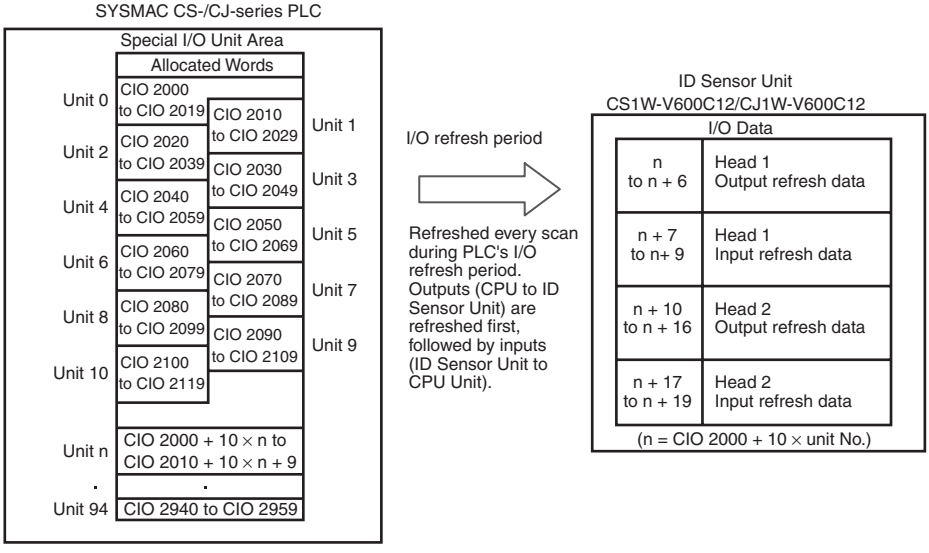

Note

1. The words allocated to the ID Sensor Unit in the Special I/O Unit Area are determined by the setting of the unit number switches on the Unit's front panel. Set unit numbers so that the same words are not allocated to more than one Unit. (Refer to page 39 for the setting method.)
2. If the same unit number is set for more than one Special I/O Unit, a fatal error (*No. duplication error* on CX-Programmer or *Unit No. Duplication* on Programming Console), and the PLC will not operate.

4-3-2 Special I/O Unit Bit Allocations

The words in the Special I/O Unit Area are allocated as shown in the following table.

Outputs

I/O	Word address		Bit No.	Type	Bit name	Description
	Head 1 of CS1W-V600C11, CS1W-V600C12, CJ1W-V600C11, or CJ1W-V600C12	Head 2 of CS1W-V600C12 or CJ1W-V600C12				
Output	n	n + 10	03 to 15	Unit Controls	---	Not used
			02		Abort Bit	Execution is aborted if this bit is turned ON during command execution.
			01		Error Reset Bit	If this bit is turned ON while the ID Sensor Unit is waiting for the Command Execution Bit to be turned ON, the Results Information in word (n + 8) will be cleared.
			00		Command Execution Bit	When this bit is turned ON, the ID Sensor Unit will interpret the command and start execution.
	n + 1	n + 11	08 to 15	Command	Command Code	Specify the command to be executed.
			04 to 07		Communications Specification	Specify the communications method with the Data Carrier.
			00 to 03		Processing Specification	Specify details of command execution.
	n + 2	n + 12	00 to 15		Processing Address	Specify the processing start address in the Data Carrier.
	n + 3	n + 13	00 to 15		Number of Processing Bytes	Specify the number of processing bytes in the Data Carrier
	n + 4	n + 14	00 to 15	Data Storage Area	Data Storage Word Address (rightmost 4 digits)	Specify the storage word address in BCD.
	n + 5	n + 15	12 to 15		Data Storage Area	Specify the data storage area.
			08 to 11		Bank Specification	If the EM Area is specified, specify the bank number.
			00 to 07		Data Storage Word Address (leftmost 2 digits)	Specify the storage word address in BCD.
	n + 6	n + 16	00 to 15	Option	Command Option	Specify command option.

Note First word allocated to Unit in CIO Area: n = CIO 2000 + 10 × unit No.

Command and Option Settings

Command name	Type	Command					Option	Data stored in Data Storage Area (See note 4.)	Reference
	Word address	n + 1			n + 2	n + 3	n + 6		
	Name	Command Code (BCD)	Communications Specification (BCD) (See note 2.)	Processing Specification (BCD) (See note 3.)	Processing Address (hex)	Number of Processing Bytes (hex)	Command Option		
Read		00	0: Trigger 1: Single auto 2: Repeat auto	Data storage order 0: Leftmost → Rightmost 1: Rightmost → Leftmost	0000 to FFFF	0001 to 0800	---	Read data	Page 79
Write		01			0000 to FFFF	0001 to 0800	---	Write data	Page 80
Bit Set		02			0000 to FFFF	0001 to 0004	---	Designation Data for Bit Set	Page 81
Bit Clear		03			0000 to FFFF	0001 to 0004	---	Designation Data for Bit Clear	Page 82
Mask Bit Write		04			0000 to FFFF	---	Designation Data for Mask 0000 to FFFE	Write data	Page 84
Calculation Write		05		0: Add 1: Subtract	0000 to FFFF	0001 to 0004	Operation value 0000 to FFFF	Calculation result	Page 85
Data Fill		06		0: Bytes 1: Words	0000 to FFFF	0001 to 0800 0000: All	Fill data 0000 to FFFF	---	Page 87
Data Check		07	0: Trigger 1: Single auto	0: Calculation 1: Verification	0000 to FFFF	0003 to 0800	---	---	Page 88
Number of Writes Control		08		0: Add 1: Subtract	0000 to FFFF	---	No. to add 0000 to 00FF	Result of number of writes calculation	Page 89
Copy (See note 1.)		09		---	Read address 0000 to FFFF	0001 to 0800	Write address 0000 to FFFF	---	Page 90

Note

1. The Copy command cannot be used on the CS1W-V600C11/CJ1W-V600C11.
2. Refer to *5-2 Communications Specifications* for communications specifications.
3. Refer to *Designating Processing Specifications* on page 46 for designation methods.
4. Refer to *Designating Data Storage Areas* on page 46 for designation methods.

Designating Processing Specifications

Commands	Processing Specification
Read Write Bit Set Bit Clear Mask Bit Write	0: Leftmost to Rightmost 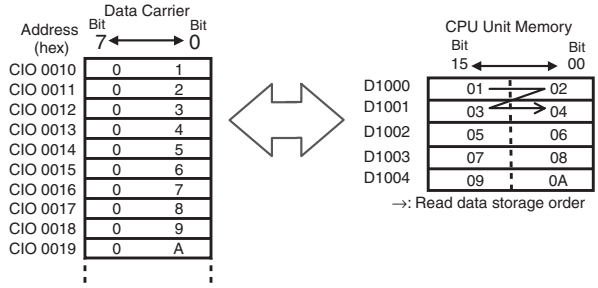 1: Rightmost to Leftmost 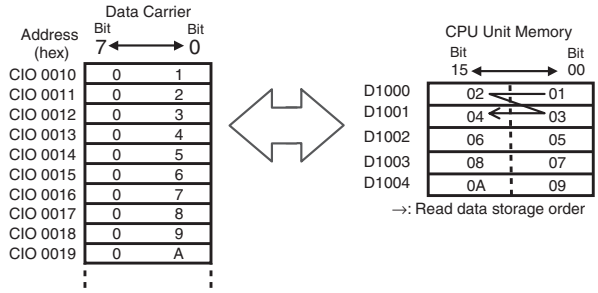
Calculation Write Number of Writes Control	0: Add 1: Subtract
Data Fill	0: Bytes (Rightmost 8 bits) 1: Words
Data Check	0: Calculation (write) 1: Verification

Designating Data Storage Areas

	Word address	n + 5			n + 4
	Bit No.	15 to 12	11 to 08	07 to 00	15 to 00
Area	**Specifiable range**	**Area specification**	**Bank specification**	**Address (leftmost 2 digits)**	**Address (rightmost 4 digits)**
DM	D00000 to D32767	0 (hex)	Always 0	000000 to 032767 (BCD)	
CIO	CIO 0000 to CIO 6143	1 (hex)	Always 0	000000 to 006143 (BCD)	
WR	W000 to W511	2 (hex)	Always 0	000000 to 000511 (BCD)	
HR	H000 to H511	3 (hex)	Always 0	000000 to 000511 (BCD)	
AR	A000 to A959	4 (hex)	Always 0	000000 to 000959 (BCD)	
EM	00000 to 32767	5 (hex)	0 to C (hex)	000000 to 032767 (BCD)	
TIM	T0000 to T4095	6 (hex)	Always 0	000000 to 004095 (BCD)	
CNT	C0000 to C4095	7 (hex)	Always 0	000000 to 004095 (BCD)	

Note

1. If there is a mistake in designating the command and option, the Command Error Flag (word (n + 8), bit 00) in the Results Information will turn ON, and the command will not be executed.
2. If there is a mistake in designating the data storage area, the Data Storage Area Specification Error Flag (word (n + 8), bit 01) in the Results Information will turn ON, and the command will not be executed.

Inputs

I/O	Word address		Bit No.	Type	Bit name	Description
	Head 1 of CS1W-V600C11, CS1W-V600C12, CJ1W-V600C11, or CJ1W-V600C12	Head 2 of CS1W-V600C12 or CJ1W-V600C12				
Input	n + 7	n + 17	15	Unit Status	Unit Busy Flag	Turns ON when there is an ID Sensor Unit error.
			14		Test Mode Flag	Turns ON during Test Mode.
			13		Head Power Supply Error Flag	Turns ON when there is an error in the Unit's 24-V power supply or the input power supply.
			12		Memory Error Flag	Turns ON when there is an error in ID Sensor Unit memory.
			03 to 11		---	Not used
			02		Error End Flag	ON for one scan when processing ends in an error.
			01		Normal End Flag	ON for one scan when processing ends normally.
			00		ID Busy Flag	Turns ON while communications are in progress.

I/O	Word address		Bit No.	Type	Bit name	Description
	Head 1 of CS1W-V600C11, CS1W-V600C12, CJ1W-V600C11, or CJ1W-V600C12	Head 2 of CS1W-V600C12 or CJ1W-V600C12				
Input (cont'd)	n + 8	n + 18	15	Results Information	Head Error Flag (Error Code: 7C)	Turns ON when an error occurs because a R/W Head is not connected. Turns ON when the 24-V power is not corrected supplied to the R/W Head.
			14		Verification Error Flag (Error Code: 71)	Turns ON when data cannot be written correctly to the Data Carrier (only when verification is specified).
			13		Data Carrier Address Error Flag (Error Code: 7A)	Turns ON when execution is not possible because the processing address is not specified correctly.
			12		Data Carrier Communications Error Flag (Error Code: 70)	Turns ON when communications cannot be completed normally because an error occurred in communications with the Data Carrier.
			11		Write Protection Error Flag (Error Code: 7D)	Turns ON when an attempt is made to write to a write-protected area. Turns ON when the Data Carrier is not an applicable model.
			10		Data Carrier Missing Error Flag (Error Code: 72)	Turns ON when the communications specification is designated as a trigger but there is no Data Carrier in the R/W Head's communications area. Turns ON when there is no Data Carrier in the R/W Head's communications area before the auto wait time elapses.
			06 to 09		---	Not used
			05		Battery Warning Flag (Error Code: 7B)	Turns ON when an error occurs outside of the write area. Turns ON when a battery warning occurs.
			04		Status Flag (Error Code: 76)	Turns ON for a Calculation Write command if addition results in an overflow or subtraction results in an underflow. Turns ON when a difference is found for the verification results for a Data Check command. Turns ON when the specified number of writes is exceeded for a Number of Writes Control command. Turns ON for a Copy command if an error occurs when writing after data has been read.
			02 and 03		---	Not used
			01		Data Storage Area Specification Error	Turns ON when processing specified in data storage area cannot be executed.
			00		Command Error	Turns ON when there is an error in the setting for the Command, Communications Specification, Processing Address, or Number of Processing Bytes. Turns ON when an attempt is made to execute the Copy command for the CS1W-V600C11/CJ1W-V600C11.
	n + 9	n + 19	00 to 15	Monitor	Processing Results Monitor	Normal end: Processing time (1 to 9999 × 10 ms) Max. error: 10 ms Error end: "E0" + "Error Code" Cleared when the power supply is turned ON or command execution starts.

Processing Results Monitor Data

Word address	n + 9			
Bit No.	15 to 12	11 to 08	07 to 04	03 to 00
When the power supply is turned ON or communications are started	0	0	0	0
At a normal end	Processing time (1 to 9999 × 10 ms) (hex)			
At an error end	E	0	Error code	

Error Codes

Error classification	Error Codes	Error
Communications error with Data Carrier	7C	Head error
	71	Verification error
	7A	Data Carrier address error
	70	Data Carrier communications error
	7D	Write protection error
	72	Data Carrier missing error
	7B	Battery warning
	76	Status Flag

Note The processing results monitor will not change for a command setting error.

SECTION 5
ID Sensor Unit Functions

This section describes the operation of the ID Sensor Units.

5-1 Operating Modes 52
5-1-1 Normal Mode 52
5-1-2 Communications Test Mode 52
5-2 Communications Specifications 52
5-2-1 Trigger 53
5-2-2 Single Auto 54
5-2-3 Repeat Auto 55
5-3 System Settings and Auto Wait Time Setting 56
5-3-1 System Settings 56
5-3-2 Auto Wait Time Setting 58
5-4 Data Carrier Memory 59
5-4-1 EEPROM (Battery-free) Data Carriers 59
5-4-2 SRAM (Built-in Battery) Data Carriers 60
5-5 Write Protection 61
5-5-1 EEPROM (Battery-free) Data Carriers 61
5-5-2 SRAM (Built-in battery) Data Carriers 62
5-6 Data Carrier Life Check 64
5-6-1 EEPROM (Battery-free) Data Carriers 64
5-6-2 SRAM (Built-in battery) Data Carrier 68
5-7 Data Check 69

5-1 Operating Modes

The ID Sensor Unit has two operating modes: Normal Mode and Test Mode. The mode to be used is set on the communications test switch on the Unit's front panel.

5-1-1 Normal Mode

In normal mode, communications are performed when the Command Execution Bit (word n, bit 0) in the Special I/O Unit Area turns ON. All commands can be used in this mode. Communications results and Unit status are shown on the status indicators and in the Unit Status (word (n + 7)), Results Information (word (n + 8)), and Processing Results Monitor (word (n + 9)) in the Special I/O Unit Area.

5-1-2 Communications Test Mode

Communications tests can be performed by turning ON the communications test switch on the Unit's front panel. Communications tests are performed without reference to the CS/CJ-series CPU Unit operating status. The Test Mode Flag (word (n + 7), bit 14) in the Unit Status in the Special I/O Unit Area will turn ON while the ID Sensor Unit is in this mode.

Communications test results and Unit status can be checked on the Unit's front panel indicators and in the Processing Results Monitor (word (n + 9)) in the Special I/O Unit Area (refer to page 48). The status in Results Information (word (n + 8)) the Special I/O Unit Area will hold the status that existed before Test Mode was entered.

Communications Test Mode Operation

Read and write operation will be repeated at 1-second intervals for Data Carrier address 0000 (hex). For a Double-head Unit, status will be read and written alternately for both Heads.

Note

1. If the ID Sensor Unit is changed to Test Mode while a command is being executed, command execution will be completed and then Test Mode will be entered.
2. If an ID Sensor Unit error occurs, communications will stop regardless of the operating mode.
3. First word allocated to Unit in CIO Area: n = CIO 2000 + 10 × unit No.

5-2 Communications Specifications

There are three execution sequences that can be used to communicate with the Data Carrier. The sequence is specified in the Communications Specification (word (n + 1), bit 04 to 07) in the command settings in the Special I/O Unit Area.

Name	Communications specification	Description
Trigger	0	When the Command Execution Bit turns ON, communications are performed with the Data Carrier in the communications area and processing is ended.
Single auto	1	After the Command Execution Bit turns ON, the ID Sensor Unit waits until a Data Carrier is detected in the communications area, communications are performed, and processing is ended.
Repeat auto	2	The operation for a single auto designation is repeated. Once communications have been completed with a specific Data Carrier, communications will not be performed with it again even if it remains in the communications area. Processing is ended when the Abort Bit is turned ON.

5-2-1 Trigger

When a trigger is specified, communications are performed with the Data Carrier when the Command Execution Bit (word n, bit 0) in the Special I/O Unit Area turns ON and command execution is ended when communications have been completed. If there is no Data Carrier in the communications area when the Command Execution Bit turns ON, Data Carrier Missing Error Flag (word (n + 8), bit 10) in the Results Information in the Special I/O Unit Area will turn ON and an error code (E072) will be stored in the Processing Results Monitor (word (n + 9)). Use a sensor or other method to detect the presence of a Data Carrier before turning ON the Command Execution Bit.

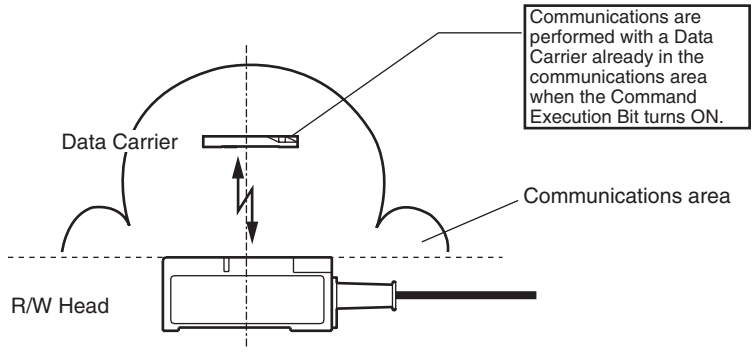

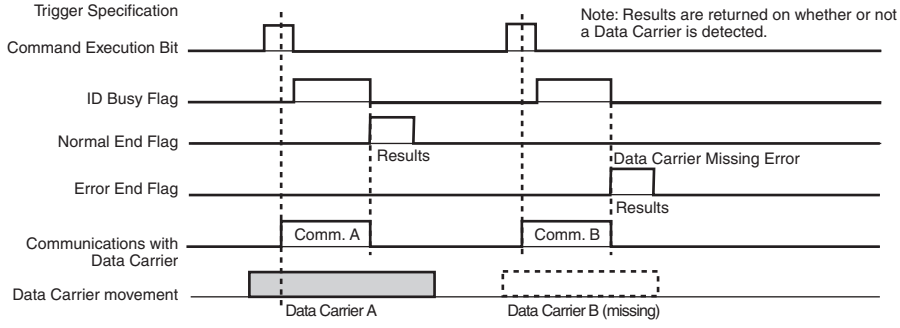

5-2-2 Single Auto

With a single auto specification, the presence of a Data Carrier is automatically detected, and communications are performed, eliminating the need for detecting the Data Carrier as is required for a trigger specification. Command execution is ended as soon as communications are completed with one Data Carrier. Execution can also be ended by turning ON the Abort Bit (word n, bit 02) while the ID Sensor Unit is waiting for the Data Carrier.

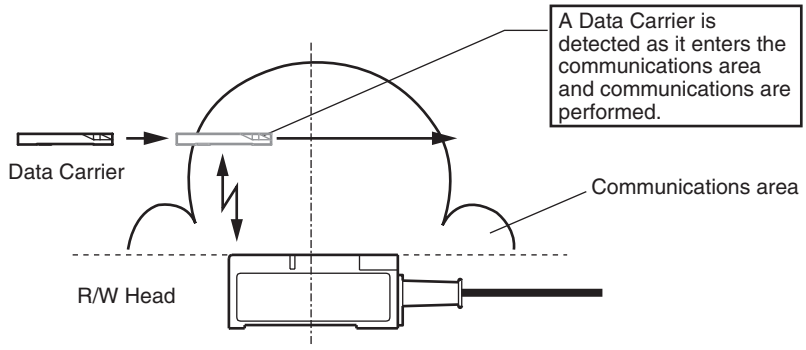

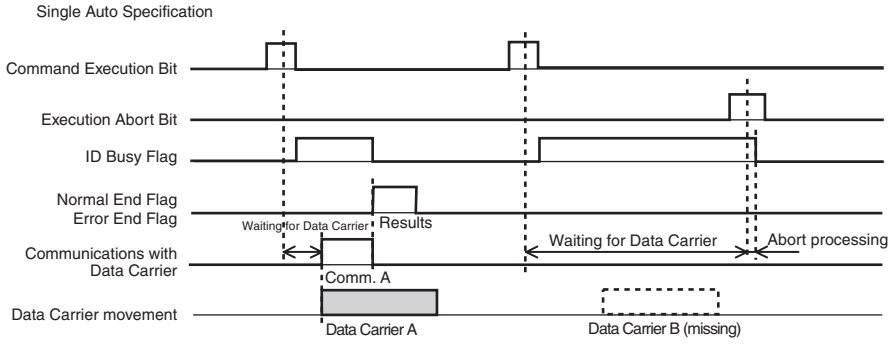

5-2-3 Repeat Auto

With a repeat auto specification, the presence of Data Carriers is automatically detected, and communications are performed, eliminating the need for detecting the Data Carrier as is required for a trigger specification. As opposed to a single auto specifications, command execution is not ended when communications with the first Data Carrier have been completed, rather the ID Sensor Unit waits for the next Data Carrier. Once communications have been completed with a specific Data Carrier, communications will not be performed with it again even if it remains in the communications area. Processing is ended when the Abort Bit (word n, bit 02) turns ON.

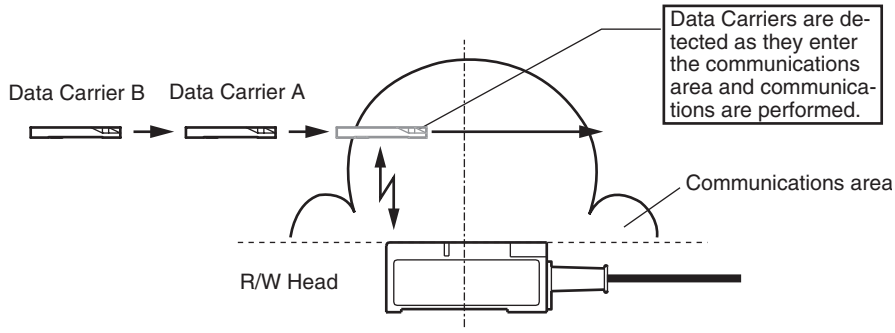

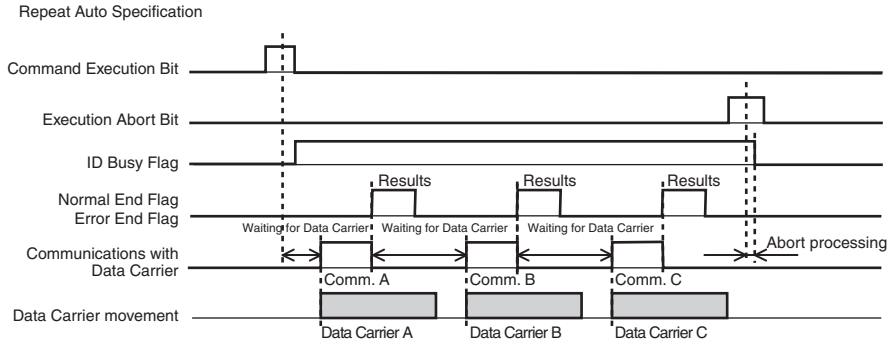

5-3 System Settings and Auto Wait Time Setting

Parameter settings (including System Settings and an Auto Wait Time Setting) can be adjusted to the user application to optimize the performance and reliability of the ID Sensor Unit. Although the default settings can be used for most applications without any problems, the parameters can be changed to optimize the system.

5-3-1 System Settings

Communications Test Mode Switch Setting

The communications test mode switch on the Unit's front panel can be used to enable and disable the communications test. The communications test mode switch can be set to disable test mode to prevent accidentally entering test mode.

DM Area address		Bit No.	Description		Default
Head 1 of CS1W-V600C11, CS1W-V600C12, CJ1W-V600C11, or CJ1W-V600C12	Head 2 of CS1W-V600C12 or CJ1W-V600C12				
m	m + 100	08 to 11	0	Communications test mode switch enabled.	0 (Enabled)
			1	Communications test mode switch disabled. (Always Normal Mode.)	

Verification Setting

Verification can be enabled for write operations, or verification can be disabled to shorten the communications time. The verification setting is valid for all commands except for Read and Data Check with a processing specification of verification.

DM Area address		Bit No.	Description		Default
Head 1 of CS1W-V600C11, CS1W-V600C12, CJ1W-V600C11, or CJ1W-V600C12	Head 2 of CS1W-V600C12 or CJ1W-V600C12				
m	m + 100	04 to 07	0	Verify write operations.	0 (Verification)
			1	Do not verify write operations.	

Communications Mode Setting

This setting is valid only when accessing EEPROM (battery-free) Data Carriers. It is ignored for SRAM (built-in battery) Data Carriers. For details, refer to the user manual for the R/W Heads and Data Carriers.

DM Area address		Bit No.	Description		Default
Head 1 of CS1W-V600C11, CS1W-V600C12, CJ1W-V600C11, or CJ1W-V600C12	Head 2 of CS1W-V600C12 or CJ1W-V600C12				
m	m + 100	00 to 03	0	Communicate using the Communications Distance Priority Mode.	0 (distance priority)
			1	Communicate using the Communications Time Priority Mode.	

Note

1. First word allocated to Unit in DM Area: m = D20000 + 100 × unit No.
2. Always turn the power supply to the PLC OFF and ON or turn ON the Special I/O Unit Restart Bit after changing settings in the DM Area from a Programming Device. DM Area setting data is transferred to Special I/O Units only when the power supply is turned ON or the Special I/O Unit Restart Bit is turned ON.

5-3-2 Auto Wait Time Setting

If a normal response is not received in communications with a Data Carrier when the Data Carrier has been detected, retry processing will be performed to resend the same command. Retry processing is performed until the Auto Wait Time has expired while the ID Sensor Unit is waiting for a Data Carrier. The Data Carrier wait status begins for a single auto specification, when command execution is started. From the second Data Carrier for a repeat auto specification, it begins when communications with the previous Data Carrier have been completed.

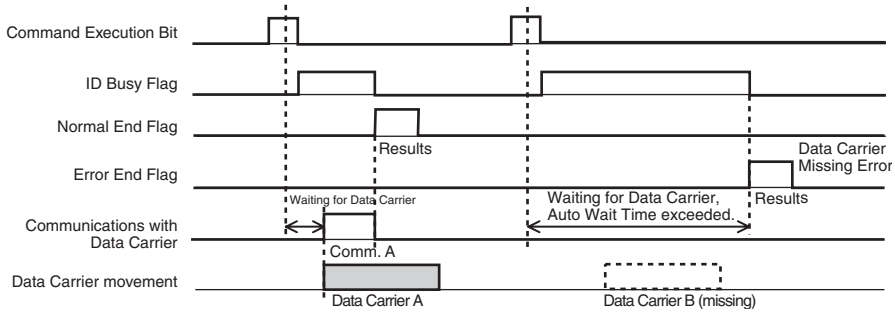

DM Area address		Bit No.	Description		Default
Head 1 of CS1W-V600C11, CS1W-V600C12, CJ1W-V600C11, or CJ1W-V600C12	Head 2 of CS1W-V600C12 or CJ1W-V600C12				
m + 1	m + 101	00 to 15	0000 to 9999	1 to 9999 × 0.1 s 0: Infinite (Time not monitored)	0 (Infinite)

Note

1. First word allocated to Unit in DM Area: m = D20000 + 100 × unit No.
2. Always turn the power supply to the PLC OFF and ON or turn ON the Special I/O Unit Restart Bit after changing settings in the DM Area from a Programming Device. DM Area setting data is transferred to Special I/O Units only when the power supply is turned ON or the Special I/O Unit Restart Bit is turned ON.

5-4 Data Carrier Memory

The memory access area for the ID Sensor Unit is 64 Kbytes from address 0000 (hex) to address FFFF (hex). The area that can actually be accessed is determined by the memory capacity of the Data Carrier. The manufacturing date area, write protection setting area and handling methods, and the life control method depend on the type of memory in the Data Carrier.

Contents	EEPROM (battery-free) Data Carrier	SRAM (built-in battery) Data Carrier	Reference
Manufacturing date area	None	Addresses 0000 and 0001 (hex) (2 bytes)	Page 59
Write-protectable range	Either addresses 01 to 7F (hex) or addresses 01 to FF (hex) (Start address is fixed.)	Any range within the following settings: Start address: 0006 to 7FFF (hex), End address: 0006 to FFFF (hex)	Page 61
Life control method	Memory life control using the Number of Writes Control command	Battery life control using a low battery check.	Page 64

5-4-1 EEPROM (Battery-free) Data Carriers

Data Carrier Memory Map

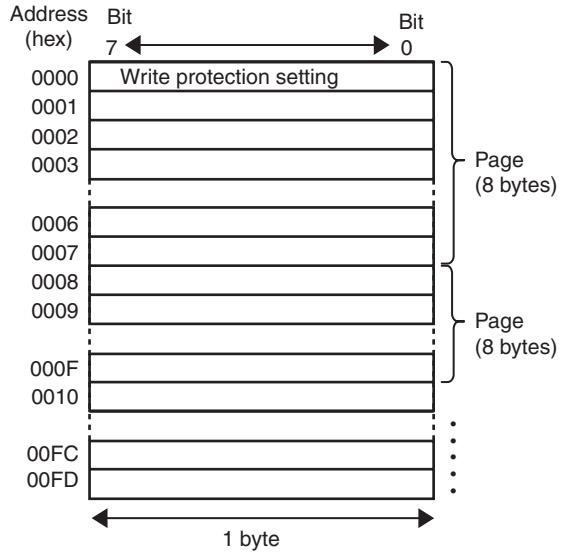

Manufacturing Date Format

There is no manufacturing date area. The start address is the write protection setting.

Note A Data Carrier address error will occur if the Processing Address or Number of Processing Bytes specified for a Bit Set, Bit Clear, Mask Bit Write, Calculation Write, or Number of Writes Control command results in communications across multiple pages. When using these commands, specify the Processing Address and Number of Processing Bytes so that all processing is performed on the same page. The address ranges for individual pages are as follows: 0000 to 0007, 0008 to 000F, 0010 to 0017, 0018 to 001F, . . . , 00F0 to 00F7, and 00F8 to 00FD.

5-4-2 SRAM (Built-in Battery) Data Carriers

Data Carrier Memory Map

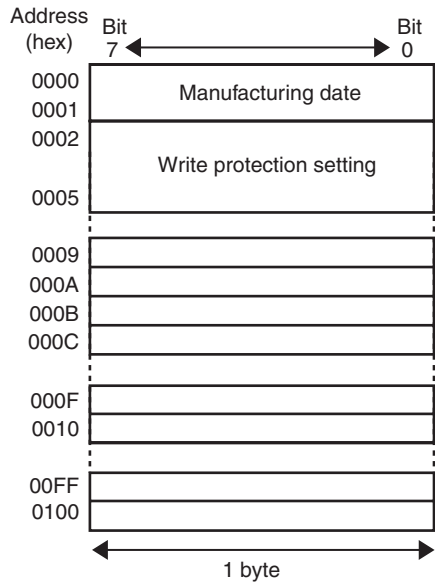

Manufacturing Date Format

The manufacturing date is written to the first two bytes at the factory to facilitate managing the life of the Data Carrier. The data in these bytes can be read, but it cannot be written by the user. If an attempt is made to write this data, a write protection error will occur.

Manufacturing Date

Address	Bit No.							
	7	6	5	4	3	2	1	0
0000	10s digit of month				1s digit of month			
0001	10s digit of year				1s digit of year			

Note

1. The rightmost two digits are given for the year (1992: “92”)
2. The month is expressed as a 2-digit number (March: “03” and October: “10”)

Example: Manufacturing Date of September 1992

Address	Bit No.							
	7	6	5	4	3	2	1	0
0000	0	0	0	0	1	0	0	1
	0				9			
0001	1	0	0	1	0	0	1	0
	9				2			

5-5 Write Protection

The write protection function is provided so that product model numbers and other important product information stored in the Data Carrier can be protected from being lost though careless write operations. We recommend that write protection be set after important data has been written.

5-5-1 EEPROM (Battery-free) Data Carriers

Setting Write Protection

If the write protection end address is written to address 0000 (hex) of the Data Carrier, address 0001 (hex) to the specified end address will be write-protected. Write protection can be enabled and disabled by setting bit 7 of address 0000 (hex).

Address	Bit No.							
	7	6	5	4	3	2	1	0
0000	Protected /Not protected	End address						

- Write Protection Bit

Address 0000 (hex), bit 7	Description
1	Enable write protection.
0	Disable write protection.

- Write Protection Setting Range

Address	Write protection setting range
Start address	Always 01 (hex)
End address	00 (hex), or 01 (hex) to 7F (hex)

Note

1. Address 00 (hex) cannot be write-protected.
2. Addresses 80 (hex) to FD (hex) cannot be set as the end address.
3. If the end address is set to 00 (hex), all addressed from address 01 (hex) to FF (hex) will be write-protected.
4. Write any data to be write-protected starting at address 0001 (hex). The start address for write protection is 0001 (hex) fixed.

Write Protection Settings Example for Data Carrier with a Memory Capacity of 254 Bytes

The following settings will write-protect addresses 0001 (hex) to 0012 (hex).

Address	Bit No.							
	7	6	5	4	3	2	1	0
0000	1	0	0	1	0	0	1	0
	9				2			

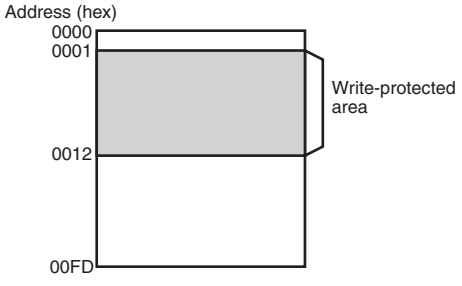

If the end address is set to 00 (hex), the entire area except for address 0000 (hex) will be write-protected.

Example: End Address Set to 00 (hex)

Address	Bit No.							
	7	6	5	4	3	2	1	0
0000	1	0	0	0	0	0	0	0
	8				0			

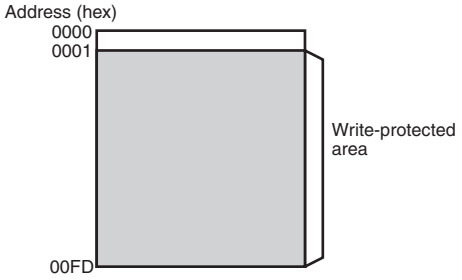

Clearing Write Protection

To clear write protection, set bit 7 of address 0000 (hex) to 0. Write protection will be cleared and the end address set in address 0000 (hex) will be disabled. When clearing write protection, write only to the write protection setting area (1 byte starting from address 0000). If other addresses are written to, a write protection error will occur and write protection will not be cleared.

5-5-2 SRAM (Built-in battery) Data Carriers

Setting Write Protection

The write protection setting uses 4 bytes of the Data Carrier, from address 0002 (hex) to 0005 (hex). Write protection can be enabled and disabled by setting bit 7 of address 0002 (hex).

Address	Bit No.							
	7	6	5	4	3	2	1	0
0002	Protected/ Not protected	Leftmost 2 digits of start address						
0003	Rightmost 2 digits of start address							
0004	Leftmost 2 digits of end address							
0005	Rightmost 2 digits of end address							

Write Protection Bit

Address 0002 (hex), bit 7	Description
1	Enable write protection.
0	Disable write protection.

Write Protection Setting Range

Address	Write protection setting range
Start address	0006 (hex) to 7FFF (hex)
End address	0006 (hex) to FFFF (hex)

Write Protection Settings Example for Data Carrier with a Memory Capacity of 2 Kbytes

1,2,3... 1. The following settings will write-protect addresses 0015 (hex) to 0120 (hex) (start address < end address).

Address	Bit No.							
	7	6	5	4	3	2	1	0
0002	1	0	0	0	0	0	0	0
	8				0			
0003	0	0	0	1	0	1	0	1
	1				5			
0004	0	0	0	0	0	0	0	1
	0				1			
0005	0	0	1	0	0	0	0	0
	2				0			

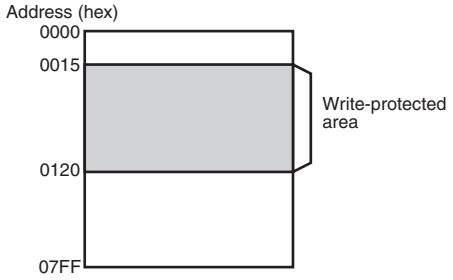

2. To write-protect only 1 byte, (start address = end address), set the start address and the end address to the same address.

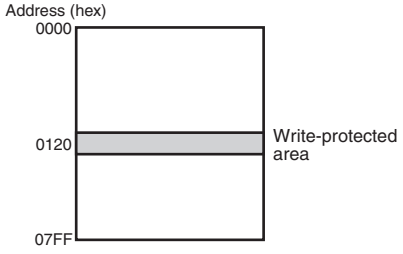

3. If the specified end address exceeds the end address of the Data Carrier (end address > 07FF (hex)), the Data Carrier memory area will be write-protected through address 07FF (hex), i.e., through the end of the Data Carrier memory area.

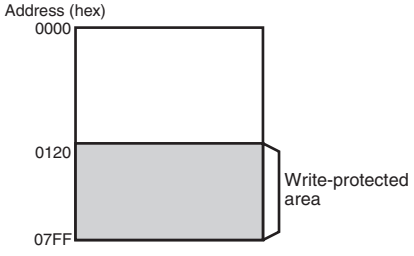

4. If the start address exceeds the end address (start address > end address), the areas from the start address to the end of the Data Carrier memory area (address 07FF (hex)) and from address 0006 (hex) to the specified end address will be write-protected.

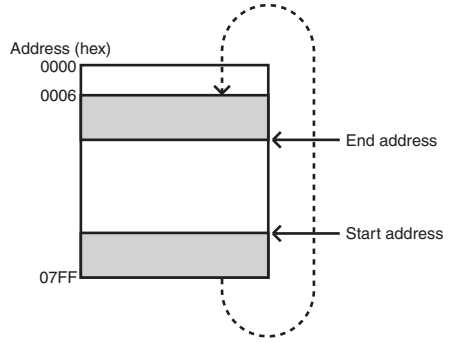

Clearing Write Protection

To clear write protection, set bit 7 of address 0002 (hex) to 0. Write protection will be cleared and the end address and start address set in addresses 0002 (hex) to 0005 (hex) will be disabled. When clearing write protection, write only to the write protection setting area (4 bytes starting from address 0002). If other addresses are written to, a write protection error will occur and write protection will not be cleared.

5-6 Data Carrier Life Check

The method used to control the life of the Data Carriers depends on the Data Carrier memory type (SRAM or EEPROM).

For SRAM (built-in battery) Data Carriers, the life of the battery is controlled. For EEPROM (battery-free) Data Carriers, the number of writes is controlled (100,000 writes or user setting).

5-6-1 EEPROM (Battery-free) Data Carriers

The Number of Writes Control command can be used to manage the life of EEPROM (battery-free) Data Carriers. The end of the life of a Data Carrier is detected by using the Number of Writes Control command to detect when the number of times a EEPROM (battery-free) Data Carrier has been written exceeds either 100,000 writes or a specified number of writes.

There are two ways to manage the number of writes. One is to add to the number of writes and then detect when the total exceeds 100,000 writes. The other is to subtract from a user-specified number of writes and then detect when the specified value has been exceeded (i.e., when 0 is reached).

Number of Writes Control 1 (Life Control = Preset Number of Writes)

The Number of Writes Control Area consists of 3 bytes from the start address. The Number of Writes Control command is executed with an Add specification. The specified numbers of writes are added and the total is written to the control area.

When the value in the number of writes control area exceeds the preset number of writes (100,000 writes), the Status Flag (word (n + 8), bit 04) in the

Results Information turns ON. If the value in the control area already exceeds 100,000 writes, the value will not be changed.

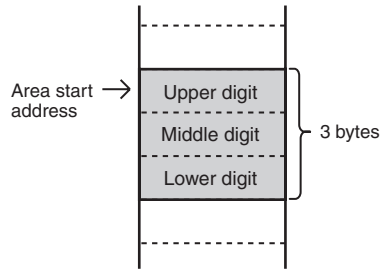

Application Method

The life of the Data Carrier can be managed by updating the number of writes value when data is written to the address most frequently written. (The life of the Data Carrier is 100,000 writes for any one address, so the number of writes must be counted for the address that is written most frequently.) It is also possible to confirm the number of writes without updating the number of writes value.

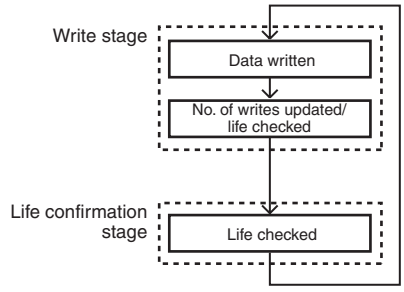

Note For any one Data Carrier, use only an Add specification or a Subtract specification for the Number of Writes Control command. If both specifications are used for the same Data Carrier, the number of writes control will not be possible.

Application Example

The following example uses 3 bytes starting at address 0010 (hex) as the number of writes control area.

1,2,3... 1. A Write command is executed to clear the control area.

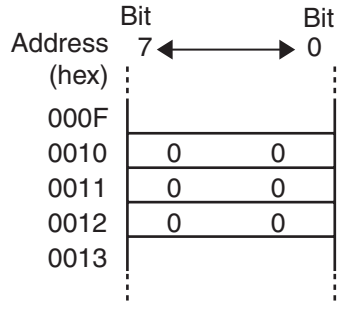

2. The Number of Writes Control command is executed with an Add specification and the number of writes set to 4.

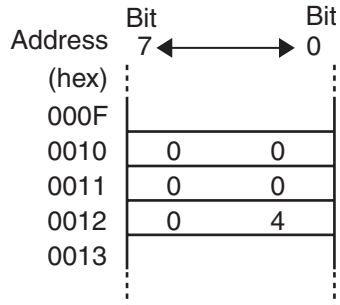

3. The Number of Writes Control command is executed with an Add specification and the number of writes set to 5.

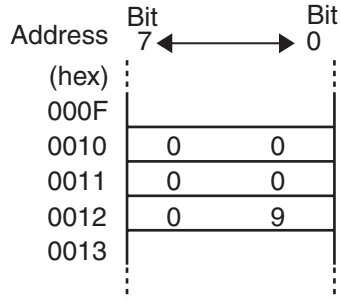

4. The following illustration shows memory status when the total number of writes has reached 100,000 writes. If the Number of Writes Control command is executed with an Add specification and the number of writes set to 5, the Status Flag (word (n + 8), bit 04) in the Results Information will turn ON.

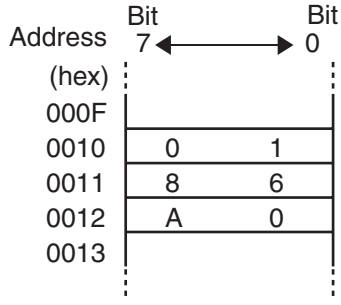

Number of Writes Control 2 (Life Control = User Setting)

The Number of Writes Control Area consists of 3 bytes from the start address. The Number of Writes Control command is executed with a Subtract specification. The specified number of writes is subtracted and the result is written to the control area. When the value in the number of writes control area is less than 0, the Status Flag (word (n + 8), bit 04) in the Results Information turns

ON. If the value in the control area is already less than 0, the value will not be changed.

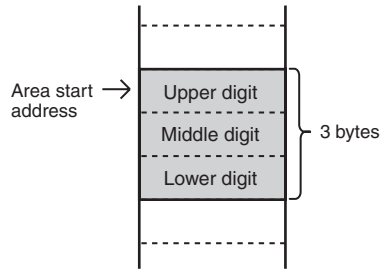

Application Method

A user-specified number of writes can be used for life control by writing the desired value in the Number of Writes Control Area in advance. The life of the Data Carrier can be managed by updating the number of writes value when data is written to the address most frequently written. (The Data Carrier has a limited life for any one address, so the number of writes must be counted for the address that is written most frequently.) It is also possible to confirm the number of writes without updating number of writes value.

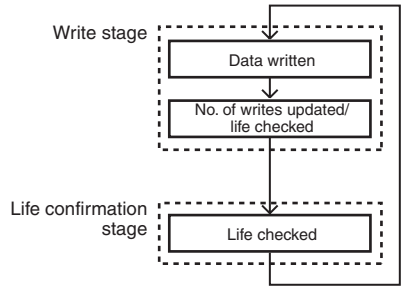

Note

1. For any one Data Carrier, use only an Add specification or a Subtract specification for the Number of Writes Control command. If both specifications are used for the same Data Carrier, the number of writes control will not be possible.
2. The number of writes value can be set as high as 16,700,000 write. The life of an EEPROM Data Carrier, however, is 300,000 writes (= 0493E0 (hex)) at 40 °C or lower. Do not set values that exceed 300,000.

Application Example

The following example uses 3 bytes starting at address 0010 (hex) as the number of writes control area.

1,2,3...

1. A Write command is executed to set the control area to 300,000 writes.

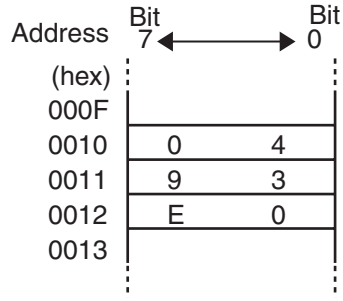

2. The Number of Writes Control command is executed with a Subtract specification and the number of writes set to 5.

Address (hex)	Bit 7	Bit 0
000F		
0010	0	4
0011	9	3
0012	D	B
0013		

3. The following illustration shows memory status when the total number of writes has reached 300,000 writes. If the Number of Writes Control command is executed with a Subtract specification and the number of writes set to 5, the Status Flag (word (n + 8), bit 04) in the Results Information will turn ON.

Address (hex)	Bit 7	Bit 0
000F		
0010	0	0
0011	0	0
0012	0	0
0013		

5-6-2 SRAM (Built-in battery) Data Carrier

The method used to control the life of the Data Carriers depends on the Data Carrier memory type (SRAM or EEPROM). For SRAM (built-in battery) Data Carriers, the life of the battery is controlled.

Low Battery Check Method

1,2,3...

1. The low battery check for a Data Carrier is not performed constantly. It is performed only when specific access is performed. This is because a specific current flows in internal circuits when the battery is checked, meaning that the life of the battery would be reduced if the low battery check was performed each time the Data Carrier was accessed.
   We recommend that the system be programmed to routinely check the life of the battery once a day.
2. The low battery check is performed only when the data in addresses 0000 (hex) and 0001 (hex) (2 bytes) is read.
3. Response for a Low Battery
   The Battery Warning Flag (word (n + 8), bit 05) in the Results Information will turn ON if the battery is low.

Data Carrier Life after a Low Battery Is Detected

A Data Carrier with a built-in battery can be used for approximately one month under normal conditions after a low battery is detected. Nevertheless, replace the Data Carrier as soon as possible.

A Data Carrier with a replaceable battery (V600-D2KR16) can be used for approximately two weeks under normal conditions after a low battery is detected. Nevertheless, replace the Data Carrier (battery) as soon as possible.

Note

1. For a Data Carrier with a replaceable battery (V600-D2KR16), the battery is checked when any address is read or written.
2. The Data Carriers contain a lithium/thionyl chloride battery. If this battery is not used for several months, the internal resistance in the battery will increase. Because of this, the low battery check may detect a low battery for a Data Carrier even though the battery has sufficient life remaining. This is due to the increased internal resistance in the battery and not to the life of the battery. When using a Data Carrier that has not been used for months after purchase, perform read operations for about 10 minutes to activate the battery and return the internal resistance of the battery to normal status. This will not meaningfully affect the life of the battery.

⚠ WARNING

The SRAM-type Data Carrier has a built-in lithium battery which can combust or explode if mishandled. Do not disassemble the Data Carrier, or subject it to high pressure or high temperatures (of 100 °C or more), or dispose of it by incineration.

5-7 Data Check

A check code can be attached to data in a Data Carrier to detect data errors caused by a low battery in SRAM Data Carriers, an expired EEPROM Data Carrier, or other factors. A CRC code generated with the polynomial $X^{16} + X^{12} + X^5 + 1$ is used as the check code.

A memory check is performed by using the Data Check command with a Calculation processing specification to write the check code and a Verification processing specification to verify the check code. The start address and the number of bytes determine the specified check block. All but the last 2 bytes are the area to calculate and the last 2 bytes are the check code area.

When the Data Check command is executed to write the check code, the CRC code is calculated for the area to calculate and written in the check code area.

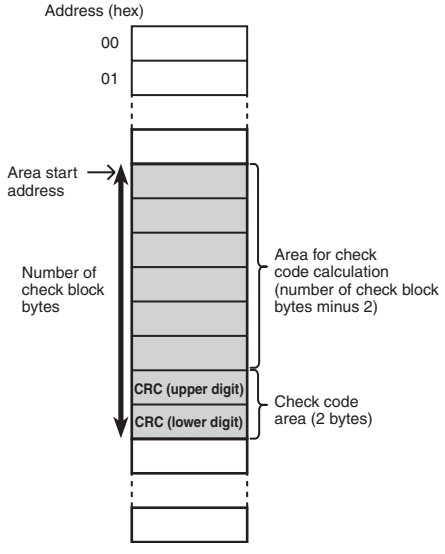

When the Data Check command is executed to verify the check code, the CRC code is calculated for the area to calculate and compared with the data in the check code area. If the calculated code is the same as the data in the check code area, the Normal End Flag (word (n + 7), bit 01) in Unit Status will

turn ON. If they are not the same, the Error End Flag (word (n + 7), bit 02) in Unit Status will turn ON, and the Status Flag (word (n + 8), bit 04) in the Results Information will turn ON as a warning.

Application Method

After writing the data, the Data Check command is executed with a Calculation processing specification to calculate and write the check code. Before reading the data, the Data Check command is executed with a Verification processing specification to verify the check code. This enables detecting internal data corruption that might occur in the Data Carrier when the data is not being accessed.

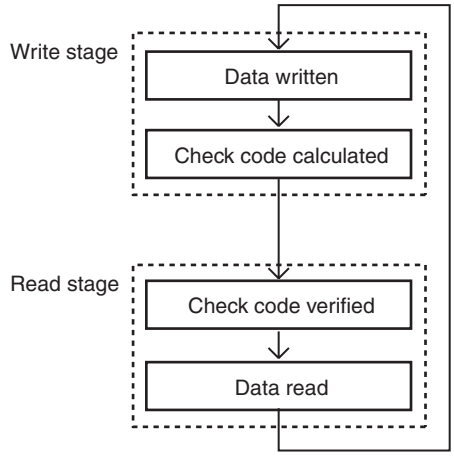

Application Example

The following example checks the data in addresses 0010 (hex) to 0012 (hex).

1,2,3...

1. Assume that the following data is initially in memory.

2. The Data Check command is executed to calculate the check code for 5 bytes beginning with address 0010 (hex). The CRC Code 5CD6 (hex)

calculated from the data “123456” is written to addresses 0013 (hex) and 0014 (hex).

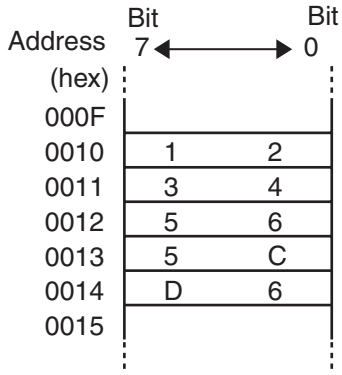

3. The Data Check command is executed to verify the check code for 5 bytes beginning with address 0010 (hex). If the data is normal, the Normal End Flag in Unit Status (word (n+7), bit 01) is turned ON.

If the check codes are not the same, the Error End Flag (word (n + 7), bit 02) in Unit Status is turned ON.

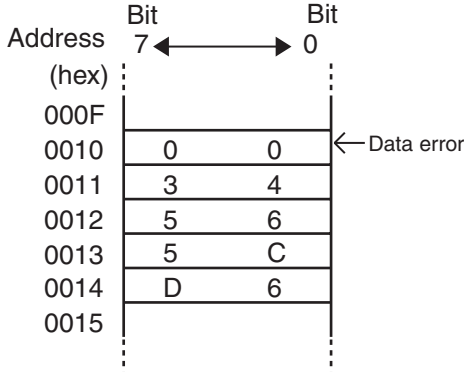

SECTION 6
Controlling the ID Sensor Unit

This section describes how to control the ID Sensor Unit using commands from the PLC's CPU Unit.

6-1 ID Sensor Unit Operation 74
6-1-1 Outline of Operation 74
6-1-2 Read Command: Read 75
6-1-3 Commands Used to Write Data 76
6-1-4 Copy Command: Copy 77
6-2 Communications Commands 78
6-2-1 Commands 78
6-2-2 Command Descriptions 79
6-3 Communications Time 91
6-3-1 Data Carrier Communications Time 91
6-3-2 TAT Calculation 92

6-1 ID Sensor Unit Operation

The user program in the CS/CJ-series CPU Unit is used to operate the ID Sensor Unit. The ID Sensor Unit performs communications with Data Carriers though the R/Write Head according to data set in the Special I/O Unit Area of the CS/CJ-series CPU Unit.

6-1-1 Outline of Operation

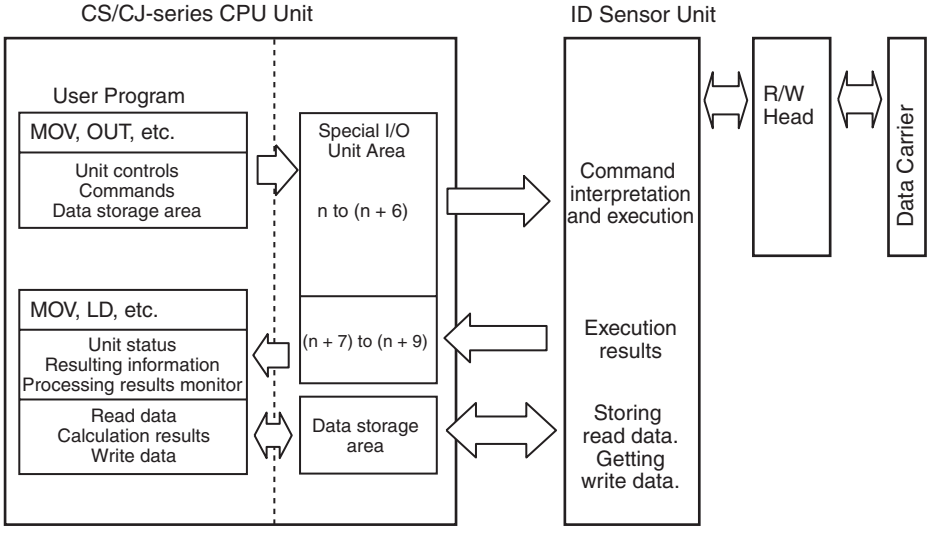

Note

1. The ID Sensor Unit will complete execution of any command that is being executed even if the CPU Unit is changed to PROGRAM mode.
2. If an ID Sensor Unit error occurs, communications will stop regardless of the operating mode.
3. First word allocated to Unit in CIO Area: n = CIO 2000 + 10 × unit No.

6-1-2 Read Command: Read

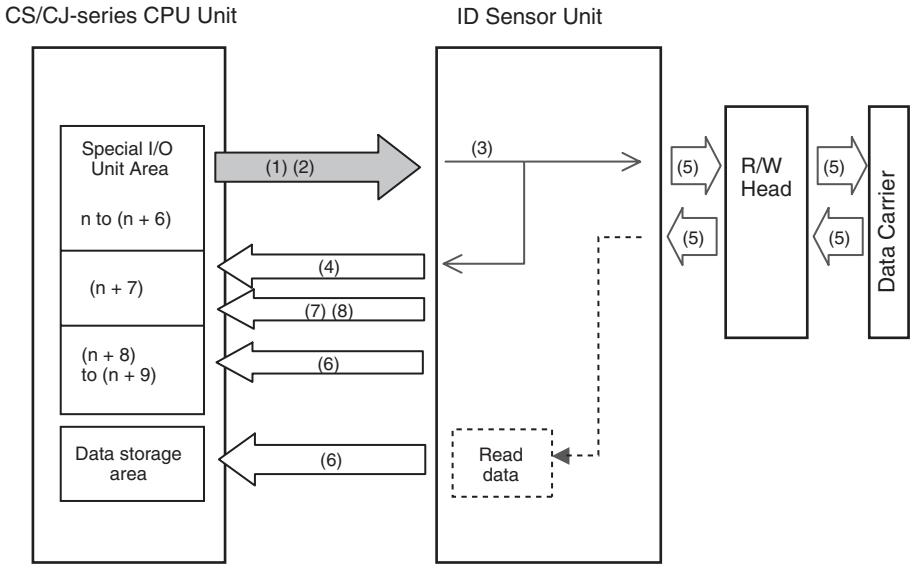

1,2,3...

1. Use the MOV, OUT, or other instructions in the user program to set data in the Special I/O Unit Area.
2. Turn ON the Command Execution Bit (word n, bit 00).
3. The ID Sensor Unit will interpret the command when the Command Execution Bit is turned ON.
4. If the command is correct, the ID Busy Flag (word (n + 7), bit 00) will turn ON. If there is an error in the command or data storage area specifications, the Command Error Flag (word (n + 8), bit 00) or Data Storage Area Error Flag (word (n + 8), bit 01) will turn ON and processing will end.
5. The ID Sensor Unit will execute the processing specified by the command for the Data Carrier.
6. If command execution ends normally, the Results Information and Processing Results Monitor will be set and the read data will be transferred to the data storage area. Data transfer to CPU Unit memory will be split into transmissions of 160 bytes each.
7. After data is stored, the Normal End Flag (word (n + 7), bit 01) will turn ON, and the ID Busy Flag will turn OFF.
8. The Normal End Flag will turn ON for one scan only, but the Results Information will be held until the Error Reset Bit is turned ON or until the next communications command is received.

Note If communications with the Data Carrier fail or an error occurs, communications will be aborted at that point, the bits in the Results Information (word (n + 8)) will turn ON accordingly and the error code will be placed in the Processing Results Monitor (word (n + 9)). Then the Error End Flag (word (n + 7), bit 02) will turn ON and the ID Busy Flag will turn OFF. The Error End Flag will turn ON for one scan only.

6-1-3 Commands Used to Write Data

The following commands are used to write data: Write, Bit Set, Bit Clear, Mask Bit Write, Calculation Write, Data Fill, Data Check, and Number of Writes Control

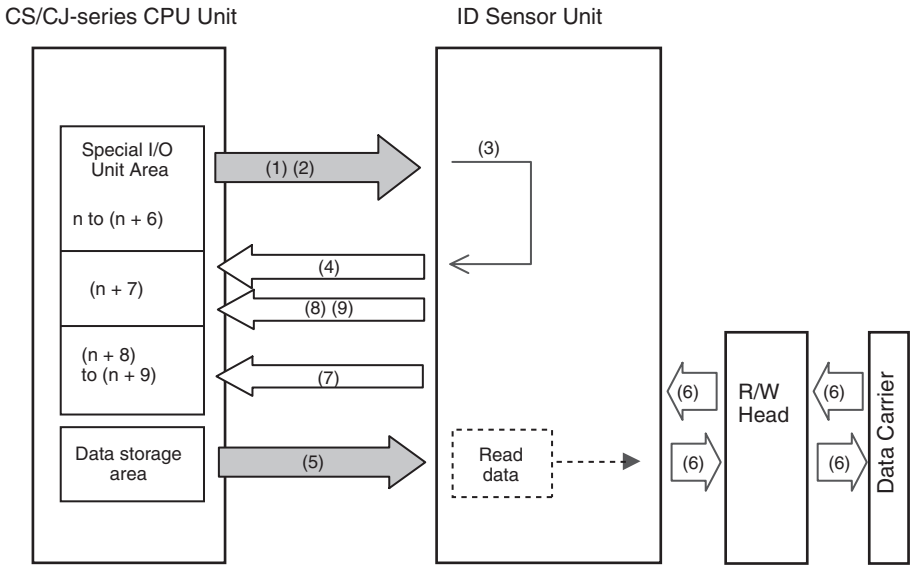

1,2,3...

1. Use the MOV, OUT, or other instructions in the user program to set data in the Special I/O Unit Area.
2. Turn ON the Command Execution Bit (word n, bit 00).
3. The ID Sensor Unit will interpret the command when the Command Execution Bit is turned ON.
4. If the command is correct, the ID Busy Flag (word (n + 7), bit 00) will turn ON. If there is an error in the command or data storage area specifications, the Command Error Flag (word (n + 8), bit 00) or Data Storage Area Error Flag (word (n + 8), bit 01) will turn ON and processing will end.
5. The data will be transferred from the specified data storage area. Data transfer from CPU Unit memory will be split into transmissions of 160 bytes each.
6. The ID Sensor Unit will execute the processing specified by the command for the Data Carrier.
7. If command execution ends normally, the Results Information (word (n + 8)) and Processing Results Monitor (word (n + 9)) will be set.
8. The Normal End Flag (word (n + 7), bit 01) will turn ON, and the ID Busy Flag will turn OFF.
9. The Normal End Flag will turn ON for one scan only, but the Results Information will be held until the Error Reset Bit is turned ON or until the next communications command is received.

Note If communications with the Data Carrier fail or an error occurs, communications will be aborted at that point, the bits in the Results Information (word (n + 8)) will turn ON accordingly and the error code will be placed in the Processing Results Monitor (word (n + 9)). Then the Error End Flag (word (n + 7), bit 02) will turn ON and the ID Busy Flag will turn OFF. The Error End Flag will turn ON for one scan only.

6-1-4 Copy Command: Copy

The following example shows writing the data from Data Carrier A for R/W Head 1 to Data Carrier B for R/W Head 2.

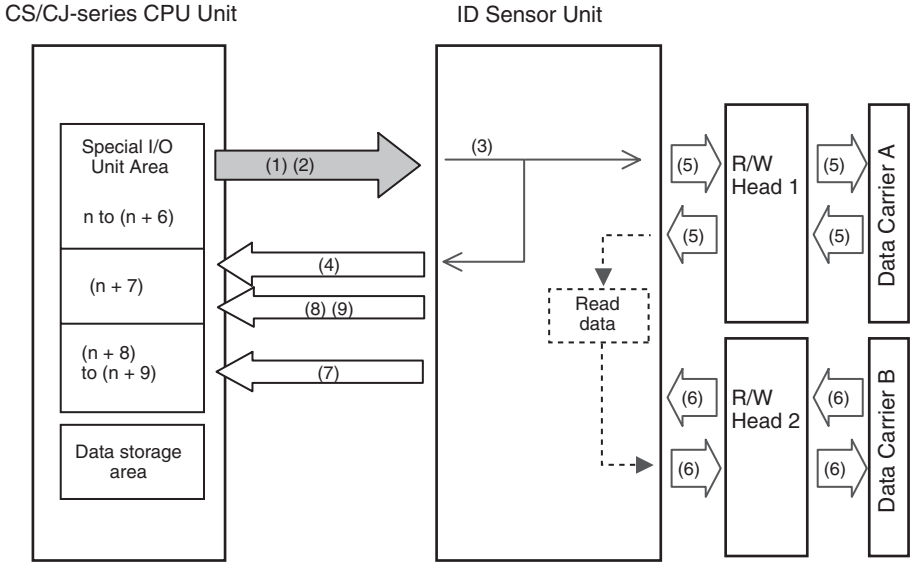

1,2,3...

1. Use the MOV, OUT, or other instructions in the user program to set data in the Special I/O Unit Area.
2. Turn ON the Command Execution Bit (word n, bit 00).
3. The ID Sensor Unit will interpret the command when the Command Execution Bit is turned ON.
4. If the command is correct, the ID Busy Flag (word (n + 7), bit 00) will turn ON. If the command is not correct, the Command Error Flag (word (n + 8), bit 00) will turn ON and processing will be ended.
5. Data will be read from Data Carrier A.
6. The data read from Data Carrier A will be written to Data Carrier B.
7. If command execution ends normally, the Results Information (word (n + 8)) and Processing Results Monitor (word (n + 9)) will be set.
8. The Normal End Flag (word (n + 7), bit 01) will turn ON, and the ID Busy Flag will turn OFF.
9. The Normal End Flag will turn ON for one scan only, but the Results Information will be held until the Error Reset Bit is turned ON or until the next communications command is received.

Note If communications with either Data Carrier fail or an error occurs, communications will be aborted at that point, the bits in the Results Information (word (n + 8)) will turn ON accordingly and the error code will be placed in the Processing Results Monitor (word (n + 9)). Then the Error End Flag (word (n + 7), bit 02) will turn ON and the ID Busy Flag will turn OFF. The Error End Flag will turn ON for one scan only.

6-2 Communications Commands

6-2-1 Commands

Command name	Command code	Function
Read	00	Reads data from Data Carrier memory.
Write	01	Writes data to Data Carrier memory.
Bit Set	02	Sets the specified bits of the specified area in the Data Carrier.
Bit Clear	03	Clears the specified bits of the specified area in the Data Carrier.
Mask Bit Write	04	Masks the specified bits in the specified area of the Data Carrier and writes data to the bits that are not masked.
Calculation Write	05	Writes the calculation result between memory data and the specified data to the Data Carrier.
Data Fill	06	Writes the specified data to the specified area of the Data Carrier.
Data Check	07	Calculates and verifies check codes for Data Carrier memory.
Number of Writes Control	08	Controls Data Carrier write life.
Copy	09	Writes the data read from a Data Carrier by one R/W Head to the Data Carrier for the other R/W Head. This command is supported by Double-head ID Sensor Units only.

Note

1. The Data Fill command will write data to the user area in the Data Carrier regardless of the setting of write protection.
2. If there is an error in the command or option specifications, the Command Error Flag (word (n + 8), bit 00) in the Results Information will turn ON and the command will not be executed.

6-2-2 Command Descriptions

Read

Reads the specified number of bytes from the specified start address in the Data Carrier.

Up to 2,048 bytes (i.e., 1,024 words) can be read with one command execution.

Word address		Bit No.	Type	Bit name	Description	
Head 1 of CS1W-V600C11, CS1W-V600C12, CJ1W-V600C11, or CJ1W-V600C12	**Head 2 of CS1W-V600C12 or CJ1W-V600C12**					
n + 1	n + 11	08 to 15	Command	Command code	00 (hex)	
		04 to 07		Communications Specification (Refer to page 52.)	Specify the communications method with the Data Carrier.	
					0	Trigger
					1	Single auto
					2	Repeat auto
		00 to 03		Processing Specification (Refer to page 46.)	Specify the read data storage order.	
					0	Leftmost → Rightmost
					1	Rightmost → Leftmost
n + 2	n + 12	00 to 15		Processing Address	Specify the first Data Carrier address to read.	
n + 3	n + 13	00 to 15		Number of Processing Bytes	Specify the number of Data Carrier read bytes.	
n + 4	n + 14	00 to 15	Data storage area	Data Storage Word Address (rightmost 4 digits)	Specify the read data storage destination. Refer to page 46 for details.	
n + 5	n + 15	12 to 15		Data Storage Area		
		08 to 11		Bank Specification		
		00 to 07		Data Storage Word Address (leftmost 2 digits)		
n + 6	n + 16	00 to 15	Option	Command Option	Not used	

Note Check the memory capacity of the Data Carriers before setting the Processing Address and Number of Processing Bytes. If the Processing Address and Number of Processing Bytes are not suitable for the Data Carriers for which communications are being performed, the Data Carrier Address Error Flag (word (n + 8), bit 13) will turn ON.

Write

Writes the specified number of bytes of data beginning at the specified start address in the Data Carrier.

Up to 2,048 bytes (i.e., 1,024 words) can be written with one command execution.

Word address		Bit No.	Type	Bit name	Description	
Head 1 of CS1W-V600C11, CS1W-V600C12, CJ1W-V600C11, or CJ1W-V600C12	**Head 2 of CS1W-V600C12 or CJ1W-V600C12**					
n + 1	n + 11	08 to 15	Command	Command code	01 (hex)	
		04 to 07		Communications Specification (Refer to page 52.)	Specify the communications method with the Data Carrier.	
					0	Trigger
					1	Single auto
					2	Repeat auto
		00 to 03		Processing Specification (Refer to page 46.)	Specify the write data storage order.	
					0	Leftmost → Rightmost
					1	Rightmost → Leftmost
n + 2	n + 12	00 to 15		Processing Address	Specify the first Data Carrier address to write.	
n + 3	n + 13	00 to 15		Number of Processing Bytes	Specify number of Data Carrier write bytes.	
n + 4	n + 14	00 to 15	Data storage area	Data Storage Word Address (rightmost 4 digits)	Specify the write data storage destination. Refer to page 46 for details.	
n + 5	n + 15	12 to 15		Data Storage Area		
		08 to 11		Bank Specification		
		00 to 07		Data Storage Word Address (leftmost 2 digits)		
n + 6	n + 16	00 to 15	Option	Command Option	Not used	

Note

1. Verification will not be performed if No Verification is set for writing.
2. Check the memory capacity of the Data Carriers before setting the Processing Address and Number of Processing Bytes. If the Processing Address and Number of Processing Bytes are not suitable for the Data Carriers for which communications are being performed, the Data Carrier Address Error Flag (word (n + 8), bit 13) will turn ON.

Bit Set

Reads the specified number of bytes from the specified start address and sets the specified bits to 1. For the Designation Data, set a hexadecimal value with the bits to be set to 1 turned ON.

Up to 4 bytes (i.e., 2 words) can be specified for one command execution.

The following example shows specifying 0120 (hex) for 2 bytes of data to set bit 0 in byte 1 and bit 5 in byte 2.

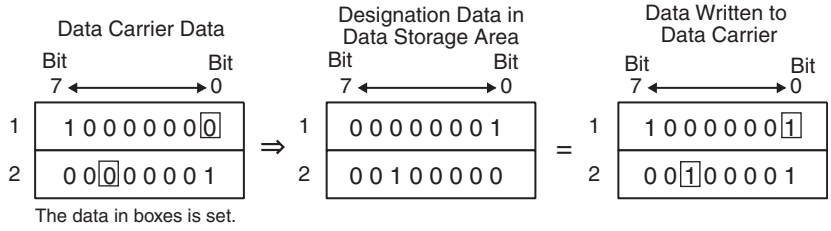

Word address		Bit No.	Type	Bit name	Description	
Head 1 of CS1W-V600C11, CS1W-V600C12, CJ1W-V600C11, or CJ1W-V600C12	Head 2 of CS1W-V600C12 or CJ1W-V600C12					
n + 1	n + 11	08 to 15	Command	Command code	02 (hex)	
		04 to 07		Communications Specification (Refer to page 52.)	Specify the communications method with the Data Carrier.	
					0	Trigger
					1	Single auto
					2	Repeat auto
		00 to 03		Processing Specification (Refer to page 46.)	Specify the storage order for the Designation Data.	
					0	Leftmost → Rightmost
					1	Rightmost → Leftmost
n + 2	n + 12	00 to 15		Processing Address	Specify the first Data Carrier address to process.	
n + 3	n + 13	00 to 15		Number of Processing Bytes	Specify number of Data Carrier bytes to process.	
n + 4	n + 14	00 to 15	Data storage area	Data Storage Word Address (rightmost 4 digits)	Specify the storage area for the Designation Data. Refer to page 46 for details.	
n + 5	n + 15	12 to 15		Data Storage Area		
		08 to 11		Bank Specification		
		00 to 07		Data Storage Word Address (leftmost 2 digits)		
n + 6	n + 16	00 to 15	Option	Command Option	Not used	

Note

1. Data status will not be changed for any bit that is OFF in the Designation Data.
2. Verification will not be performed if No Verification is set for writing.
3. When using EEPROM (battery-free) Data Carriers, be sure the write area is all on one page (refer to page 59). If processing is performed for which the write area extends across more than one page is performed for this Data Carrier, the Data Carrier Address Error Flag (word (n + 8), bit 13) in the Results Information will turn ON and the command will not be executed.

4. Check the memory capacity of the Data Carriers before setting the Processing Address and Number of Processing Bytes. If the Processing Address and Number of Processing Bytes are not suitable for the Data Carriers for which communications are being performed, the Data Carrier Address Error Flag (word (n + 8), bit 13) will turn ON.

Bit Clear

Reads the specified number of bytes from the specified start address and clears the specified bits to 0. For the Designation Data, set a hexadecimal value with the bits to be cleared to 0 turned ON.

Up to 4 bytes (i.e., 2 words) can be specified for one command execution.

The following example shows specifying 100240 (hex) for 3 bytes of data to clear bit 4 in byte 1, bit 0 in byte 2, and bit 6 in byte 3.

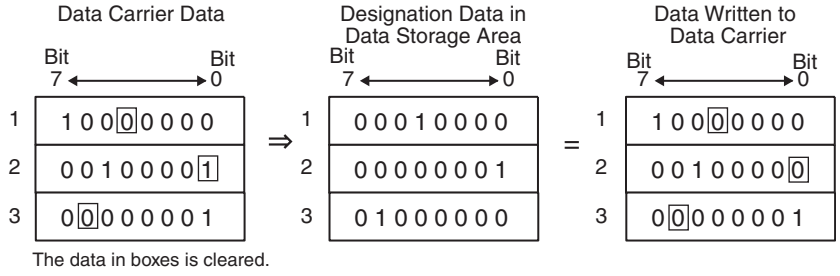

Word address		Bit No.	Type	Bit name	Description	
Head 1 of CS1W-V600C11, CS1W-V600C12, CJ1W-V600C11, or CJ1W-V600C12	Head 2 of CS1W-V600C12 or CJ1W-V600C12					
n + 1	n + 11	08 to 15	Command	Command code	03 (hex)	
		04 to 07		Communications Specification (Refer to page 52.)	Specify the communications method with the Data Carrier.	
					0	Trigger
					1	Single auto
					2	Repeat auto
		00 to 03		Processing Specification (Refer to page 46.)	Specify the storage order for the Designation Data.	
					0	Leftmost → Rightmost
					1	Rightmost → Leftmost
n + 2	n + 12	00 to 15		Processing Address	Specify the first Data Carrier address to process.	
n + 3	n + 13	00 to 15		Number of Processing Bytes	Specify number of Data Carrier bytes to process.	
n + 4	n + 14	00 to 15	Data storage area	Data Storage Word Address (rightmost 4 digits)	Specify the storage area for the Designation Data. Refer to page 46 for details.	
n + 5	n + 15	12 to 15		Data Storage Area		
		08 to 11		Bank Specification		
		00 to 07		Data Storage Word Address (leftmost 2 digits)		
n + 6	n + 16	00 to 15	Option	Command Option	Not used	

Note

1. Data status will not be changed for any bit that is OFF in the Designation Data.
2. Verification will not be performed if No Verification is set for writing.
3. When using EEPROM (battery-free) Data Carriers, be sure the write area is all on one page (refer to page 59). If processing is performed for which the write area extends across more than one page is performed for this Data Carrier, the Data Carrier Address Error Flag (word (n + 8), bit 13) in the Results Information will turn ON and the command will not be executed.
4. Check the memory capacity of the Data Carriers before setting the Processing Address and Number of Processing Bytes. If the Processing Address and Number of Processing Bytes are not suitable for the Data Carriers for which communications are being performed, the Data Carrier Address Error Flag (word (n + 8), bit 13) will turn ON.

Mask Bit Write

Reads the 2 bytes of data from the specified start address, masks it with the specified mask data, and writes data to the bits that are not masked. For the mask data, set a hexadecimal value with the bits to be masked turned ON.

Each command execution processes 2 bytes (i.e., 1 word).

Example for a Masked Bit Write

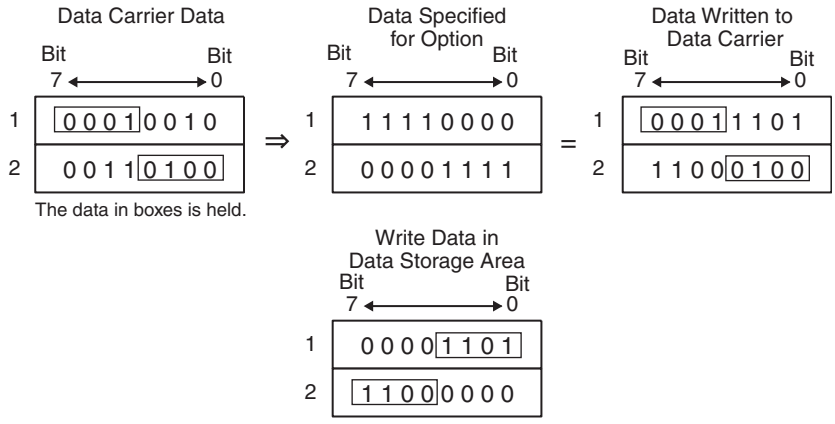

Word address		Bit No.	Type	Bit name	Description	
Head 1 of CS1W-V600C11, CS1W-V600C12, CJ1W-V600C11, or CJ1W-V600C12	**Head 2 of CS1W-V600C12 or CJ1W-V600C12**					
n + 1	n + 11	08 to 15	Command	Command code	04 (hex)	
		04 to 07		Communications Specification (Refer to page 52.)	Specify the communications method with the Data Carrier.	
					0	Trigger
					1	Single auto
					2	Repeat auto
		00 to 03		Processing Specification (Refer to page 46.)	Specify the mask data storage order.	
					0	Leftmost → Rightmost
					1	Rightmost → Leftmost
n + 2	n + 12	00 to 15		Processing Address	Specify the first Data Carrier address to process.	
n + 3	n + 13	00 to 15		Number of Processing Bytes	Not used	
n + 4	n + 14	00 to 15	Data storage area	Data Storage Word Address (rightmost 4 digits)	Specify the write data storage destination. Refer to page 46 for details.	
n + 5	n + 15	12 to 15		Data Storage Area		
		08 to 11		Bank Specification		
		00 to 07		Data Storage Word Address (leftmost 2 digits)		
n + 6	n + 16	00 to 15	Option	Command Option	Mask data (0000 to FFFE (hex))	

Note

1. The bits that are turned ON in the data set for the Command Option will be masked and will not be changed. The bits that are OFF in the mask data will be written.
2. Verification will not be performed if No Verification is set for writing.

3. When using EEPROM (battery-free) Data Carriers, be sure the write area is all on one page (refer to page 59). If processing is performed for which the write area extends across more than one page is performed for this Data Carrier, the Data Carrier Address Error Flag (word (n + 8), bit 13) in the Results Information will turn ON and the command will not be executed.
4. Check the memory capacity of the Data Carriers before setting the Processing Address and Number of Processing Bytes. If the Processing Address and Number of Processing Bytes are not suitable for the Data Carriers for which communications are being performed, the Data Carrier Address Error Flag (word (n + 8), bit 13) will turn ON.

Calculation Write

Reads the specified number of bytes from the specified start address, performs the specified operation with the data specified for the Command Option, and writes the result.

The calculation result is stored in the data storage area.

Up to 4 bytes (i.e., 2 words) can be specified for one command execution.

Example for Additions

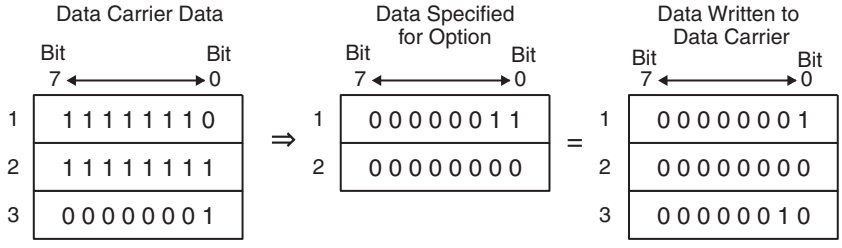

Word address		Bit No.	Type	Bit name	Description	
Head 1 of CS1W-V600C11, CS1W-V600C12, CJ1W-V600C11, or CJ1W-V600C12	**Head 2 of CS1W-V600C12 or CJ1W-V600C12**					
n + 1	n + 11	08 to 15	Command	Command code	05 (hex)	
		04 to 07		Communications Specification (Refer to page 52.)	Specify the communications method with the Data Carrier.	
					0	Trigger
					1	Single auto
					2	Repeat auto
		00 to 03		Processing Specification	Specify the calculation method.	
					0	Add
					1	Subtract
n + 2	n + 12	00 to 15		Processing Address	Specify the first Data Carrier address to write.	
n + 3	n + 13	00 to 15		Number of Processing Bytes	Specify number of Data Carrier write bytes.	

Word address		Bit No.	Type	Bit name	Description
Head 1 of CS1W-V600C11, CS1W-V600C12, CJ1W-V600C11, or CJ1W-V600C12	**Head 2 of CS1W-V600C12 or CJ1W-V600C12**				
n + 4	n + 14	00 to 15	Data storage area	Data Storage Word Address (rightmost 4 digits)	Specify the calculation result storage area. Refer to page 46 for details.
n + 5	n + 15	12 to 15		Data Storage Area	
		08 to 11		Bank Specification	
		00 to 07		Data Storage Word Address (leftmost 2 digits)	
n + 6	n + 16	00 to 15	Option	Command Option	Calculation data

Note

1. If an addition results in an overflow or a subtraction results in an underflow, the Status Flag (word (n+8), bit 04) will turn ON and the number of writes data will not be changed.
2. Verification will not be performed if No Verification is set for writing.
3. When using EEPROM (battery-free) Data Carriers, be sure the write area is all on one page (refer to page 59). If processing is performed for which the write area extends across more than one page is performed for this Data Carrier, the Data Carrier Address Error Flag (word (n + 8), bit 13) in the Results Information will turn ON and the command will not be executed.
4. Check the memory capacity of the Data Carriers before setting the Processing Address and Number of Processing Bytes. If the Processing Address and Number of Processing Bytes are not suitable for the Data Carriers for which communications are being performed, the Data Carrier Address Error Flag (word (n + 8), bit 13) will turn ON.

Data Fill

Write the fill data to the specified number of bytes starting from the specified start address in the Data Carrier.

Up to 2,048 bytes (i.e., 1,024 words) can be filled with one command execution, or the entire user area from the specified start address can be filled.

Word address		Bit No.	Type	Bit name	Description	
Head 1 of CS1W-V600C11, CS1W-V600C12, CJ1W-V600C11, or CJ1W-V600C12	Head 2 of CS1W-V600C12 or CJ1W-V600C12					
n + 1	n + 11	08 to 15	Command	Command code	06 (hex)	
		04 to 07		Communications Specification (Refer to page 52.)	Specify the communications method with the Data Carrier.	
					0	Trigger
					1	Single auto
					2	Repeat auto
		00 to 03		Processing Specification	Specify the fill data size.	
					0	Bytes (Command option rightmost 8 bits)
					1	Words
n + 2	n + 12	00 to 15		Processing Address	Specify the first Data Carrier address to write.	
n + 3	n + 13	00 to 15		Number of Processing Bytes	Specify number of Data Carrier write bytes.	
n + 4	n + 14	00 to 15	Data storage area	Data Storage Word Address (rightmost 4 digits)	Not used	
n + 5	n + 15	12 to 15		Data Storage Area		
		08 to 11		Bank Specification		
		00 to 07		Data Storage Word Address (leftmost 2 digits)		
n + 6	n + 16	00 to 15	Option	Command Option	Fill data	

Note

1. If the Number of Processing Bytes is 0000 (hex), data will be written to user area of the Data Carrier from the start address to the end address.
2. The Data Fill command will write data to the user area in the Data Carrier regardless of the setting of write protection.
3. Verification will not be performed if No Verification is set for writing.
4. Check the memory capacity of the Data Carriers before setting the Processing Address and Number of Processing Bytes. If the Processing Address and Number of Processing Bytes are not suitable for the Data Carriers for which communications are being performed, Data Carrier Address Error Flag (word (n + 8), bit 13) will turn ON.

Data Check

Finds the CRC code for the data area from the specified start address to 2 bytes less that the specified number of bytes and writes 2 bytes of data.

From 3 to 2,048 bytes of data can be specified for one command execution.

Word address		Bit No.	Type	Bit name	Description	
Head 1 of CS1W-V600C11, CS1W-V600C12, CJ1W-V600C11, or CJ1W-V600C12	Head 2 of CS1W-V600C12 or CJ1W-V600C12					
n + 1	n + 11	08 to 15	Command	Command code	07 (hex)	
		04 to 07		Communications specification (Refer to page 52.)	Specify the communications method with the Data Carrier.	
					0	Trigger
					1	Single auto
		00 to 03		Processing Specification	Specify the process.	
					0	CRC calculation
					1	CRC verification
n + 2	n + 12	00 to 15		Processing Address	Specify the Data Check Start address in the Data Carrier.	
n + 3	n + 13	00 to 15		Number of Processing Bytes	Specify the number of bytes in the data check range in the Data Carrier plus 2 bytes.	
n + 4	n + 14	00 to 15	Data storage area	Data Storage Word Address (rightmost 4 digits)	Not used	
n + 5	n + 15	12 to 15		Data Storage Area		
		08 to 11		Bank Specification		
		00 to 07		Data Storage Word Address (leftmost 2 digits)		
n + 6	n + 16	00 to 15	Option	Command Option	Not used	

Note

1. Verification will not be performed if No Verification is set for writing.
2. The last 2 bytes of the check area is the check code area. Do not write user data to these bytes.
3. Check the memory capacity of the Data Carriers before setting the Processing Address and Number of Processing Bytes. If the Processing Address and Number of Processing Bytes are not suitable for the Data Carriers for which communications are being performed, Data Carrier Address Error (word (n + 8), bit 13) will turn ON.

Number of Writes Control

Uses 3 bytes of data from the specified start address as the Number of Writes Control Area and writes data to the Data Carrier.

The number of writes for one command execution can be from 0 to 255.

Word address		Bit No.	Type	Bit name	Description	
Head 1 of CS1W-V600C11, CS1W-V600C12, CJ1W-V600C11, or CJ1W-V600C12	**Head 2 of CS1W-V600C12 or CJ1W-V600C12**					
n + 1	n + 11	08 to 15	Command	Command code	08 (hex)	
		04 to 07		Communications Specification (Refer to page 52.)	Specify the communications method with the Data Carrier.	
					0	Trigger
					1	Single auto
		00 to 03		Processing Specification	Specify the count update method.	
					0	Add
					1	Subtract
n + 2	n + 12	00 to 15		Processing Address	Specify the start address of the Number of Writes Control Area in the Data Carrier.	
n + 3	n + 13	00 to 15		Number of Processing Bytes	Not used	
n + 4	n + 14	00 to 15	Data storage area	Data Storage Word Address (rightmost 4 digits)	Specify the number of writes storage area. Refer to page 46 for details.	
n + 5	n + 15	12 to 15		Data Storage Area		
		08 to 11		Bank Specification		
		00 to 07		Data Storage Word Address (leftmost 2 digits)		
n + 6	n + 16	00 to 15	Option	Command Option	Number of writes (0 to 255)	

Note

1. Verification will not be performed if No Verification is set for writing.
2. When using EEPROM (battery-free) Data Carriers, be sure the write area is all on one page (refer to page 59). If processing is performed for which the write area extends across more than one page is performed for this Data Carrier, The Data Carrier Address Error Flag (word (n + 8), bit 13) in the Results Information will turn ON and the command will not be executed.
3. Check the memory capacity of the Data Carriers before setting the Processing Address and Number of Processing Bytes. If the Processing Address and Number of Processing Bytes are not suitable for the Data Carriers for which communications are being performed, the Data Carrier Address Error Flag (word (n + 8), bit 13) will turn ON.

Copy (Double-head Unit ID Sensor Units Only)

This command is supported by Double-head ID Sensor Units only. Data is read from the Data Carrier for one R/W Head and written to the memory of a Data Carrier in the communications area for the other R/W Head.

Writing to the second Data Carrier is always performed with a trigger.

Word address		Bit No.	Type	Bit name	Description	
Head 1 of CS1W-V600C11, CS1W-V600C12, CJ1W-V600C11, or CJ1W-V600C12	Head 2 of CS1W-V600C12 or CJ1W-V600C12					
n + 1	n + 11	08 to 15	Command	Command code	09 (hex)	
		04 to 07		Communications Specification (Refer to page 52.)	Specify the communications method for the Data Carrier to be read.	
					0	Trigger
					1	Single auto
		00 to 03		Processing Specification	Not used	
n + 2	n + 12	00 to 15		Processing Address	Specify the first Data Carrier address to read.	
n + 3	n + 13	00 to 15		Number of Processing Bytes	Specify the number of Data Carrier read bytes.	
n + 4	n + 14	00 to 15	Data storage area	Data Storage Word Address (rightmost 4 digits)	Not used	
n + 5	n + 15	12 to 15		Data Storage Area		
		08 to 11		Bank Specification		
		00 to 07		Data Storage Word Address (leftmost 2 digits)		
n + 6	n + 16	00 to 15	Option	Command Option	Specify the first Data Carrier address to write.	

Note

1. If the Command Execution Bit is turned ON in the Unit Controls for Head 1, data will be read from the Data Carrier for Head 1 and written to the Data Carrier for Head 2.
2. If the Command Execution Bit is turned ON in the Unit Controls for Head 2, data will be read from the Data Carrier for Head 2 and written to the Data Carrier for Head 1.
3. The Communications Specification for the Head that writes data will always be a trigger regardless of the specified communications method.
4. The Status Flag (word (n + 8), bit 04) in the Results Information will turn ON if an error occurs in the Head that writes data.
5. Confirm that the Head that writes data is not communicating before turning ON the Command Execution Bit. If the Head that writes data is communicating, the Status Flag (word (n + 8), bit 04) in the Results Information will turn ON.
6. Confirm the capacity of both the Data Carrier being read and the one being written before using this command. If the Processing Address and Number of Processing Bytes for the Head that write data are not suitable for the Data Carrier being communicated with, the Status Flag (word (n + 8), bit 04) in the Results Information will turn ON.

6-3 Communications Time

6-3-1 Data Carrier Communications Time

The communications time with the Data Carrier depends on the type of memory in the Data Carrier (SRAM or EEPROM). For EEPROM Data Carriers, the communications time also depends on the communications mode setting.

SRAM Data Carriers (Reference Data)

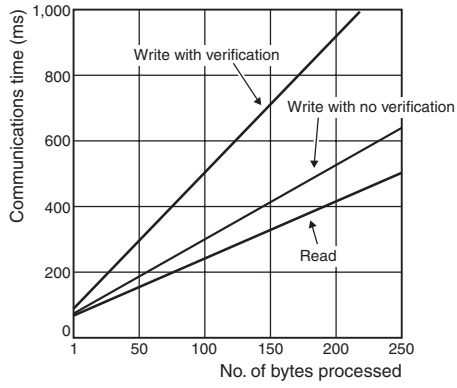

Formulas (ms)

	Communications time
Read	T = 1.8 N + 48.4
Write with verification	T = 4.2 N + 86.5
Write with no verification	T = 2.2 N + 72.8

N: Number of processed bytes

EEPROM Data Carriers (Reference Data)

Communications Distance Priority Mode

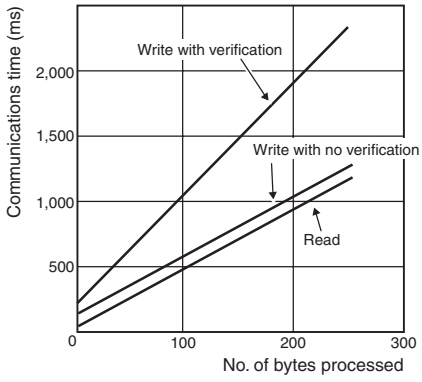

Formulas (ms)

	Communications time
Read	T = 4.3 N + 64.6
Write with verification	T = 8.7 N + 167.1
Write with no verification	T = 4.3 N + 132

N: Number of processed bytes

Communications Time Priority Mode

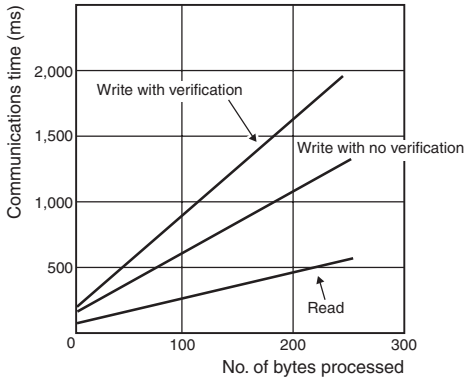

Formulas (ms)

	Communications time
Read	T = 1.8 N + 79.0
Write with verification	T = 7.1 N + 180.4
Write with no verification	T = 4.3 N + 132

N: Number of processed bytes

Note

1. The ID Sensor Unit's communications mode is set in the Special I/O Unit words in the DM Area. (Refer to page 41.)
2. The communications time for SRAM (built-in battery) Data Carriers does not depend on the communications mode.

Data Carrier Travel Speed

The Data Carrier travel speed can be calculated using the following formula.

Travel speed = Travel distance in communications area/communications time

The communications time is given in the graphs on the previous page. The travel distance in the communications area depends on the R/W Head and the Data Carrier. Refer to the user manual for the R/W Head and Data Carriers.

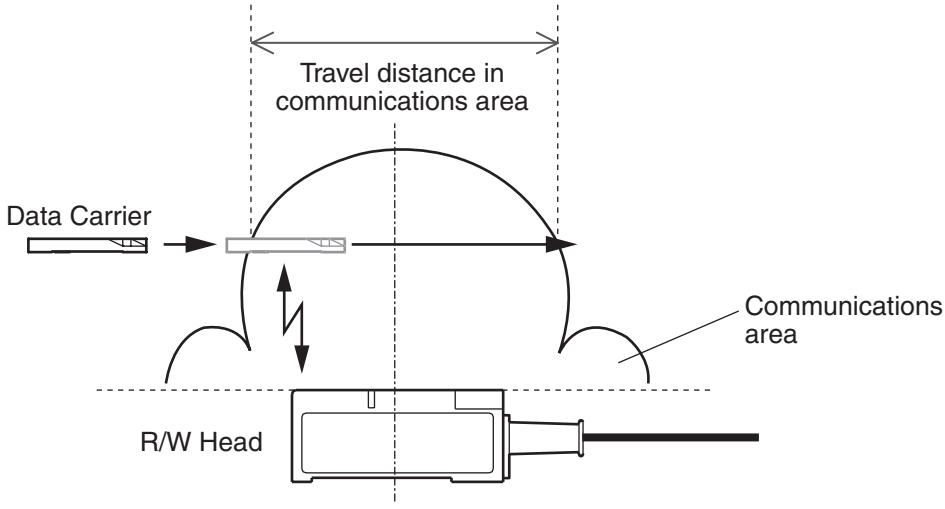

Note

1. The travel speed will change with the communications distance and axis displacement. We recommend using the widest part of the area.
2. The above calculation formula is provided only as a guideline. Perform tests with the actual system before application.
3. Communications error processing is not included in the above calculation formula.

6-3-2 TAT Calculation

The time from when the CS/CJ-series CPU Unit turns ON the ID Sensor Unit's Command Execution Bit until the Data Carrier is communicated with and execution results are returned (i.e. the TAT, or Turnaround Time) can be calculated with the following formula.

TAT = Coefficient × Cycle time + Communications time

Name	Description
Coefficient	(Number of Processing Bytes/160) + 3 (See note.)
Cycle time	Cycle time of the CS/CJ-series CPU Unit
Communications time	The communications time between the ID Sensor Unit and Data Carrier (as previously described)

Note Truncate the result of the Number of Processing Bytes/160.

SECTION 7
Troubleshooting Alarms and Errors

This section describes troubleshooting errors that can occur during ID Sensor Unit operation.

7-1 Indicators and Error Check Flowcharts 94
7-1-1 Status Indicators 94
7-1-2 Error Check Flowchart 95
7-2 ID Sensor Unit Alarms 96
7-3 CPU Unit Errors 100
7-4 Restarting Special I/O Units 101
7-5 Troubleshooting 102
7-5-1 Main Check Flowchart 102
7-5-2 System Connections Check Flowchart 103
7-5-3 Communications Check Flowchart 104

7-1 Indicators and Error Check Flowcharts

7-1-1 Status Indicators

If an alarm or error occurs in the ID Sensor Unit, the ERC indicator or ERH indicator will light on the Unit's front panel.

CS1W-V600C11

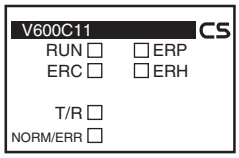

CS1W-V600C12

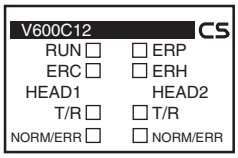

CJ1W-V600C11

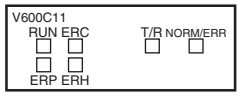

CJ1W-V600C12

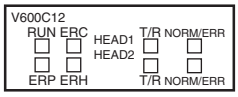

Indicator		Name	Color	Meaning	
RUN		RUN	Green	Lit	The ID Sensor Unit is operating normally.
				Not lit	The ID Sensor Unit is stopped.
ERC (Error I/O Controller)		Unit error	Red	Lit	An error has occurred in the ID Sensor Unit.
				Not lit	No error has occurred in the ID Sensor Unit.
ERH (Error at Host)		CPU Unit error	Red	Lit	An error has occurred in the CPU Unit.
				Not lit	No error has occurred in the CPU Unit.
ERP (Head Power Error)		Head power error	Red	Lit	An error has occurred in the power supply to the R/W Head.
				Not lit	The power supply to the R/W Head is normal.
Head 1	T/R	Communicating	Yellow	Lit	Communications are active.
	NORM/ERR	Normal end	Green	Lit	Communications with the Data Carrier ended normally.
		Error end	Red	Lit	Communications with the Data Carrier ended in an error.
Head 2	T/R	Communicating	Yellow	Lit	Communications are active.
	NORM/ERR	Normal end	Green	Lit	Communications with the Data Carrier ended normally.
		Error end	Red	Lit	Communications with the Data Carrier ended in an error.

7-1-2 Error Check Flowchart

Use the following flowchart to check the error if an error occurs in the ID Sensor Unit.

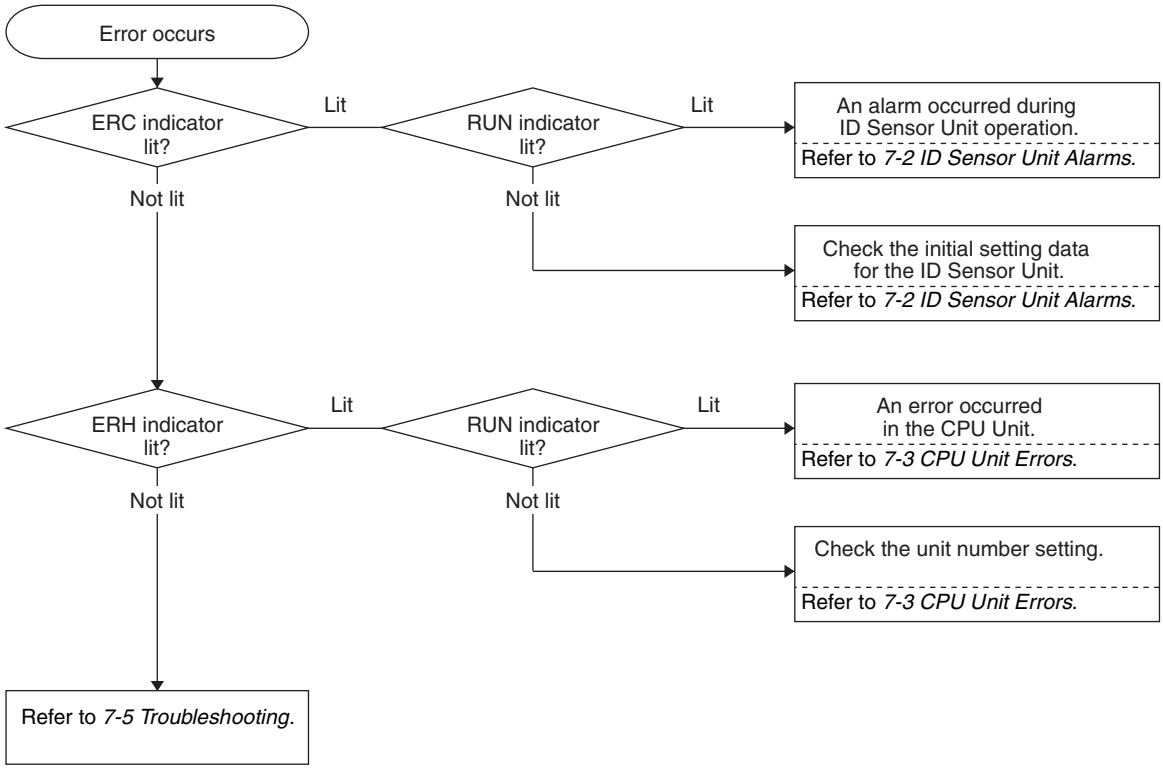

7-2 ID Sensor Unit Alarms

The ERC indicator will light when the ID Sensor Unit detects an alarm. The Alarm Flags in the Unit Status (word (n + 7)) (and, for a Double-head ID Sensor Unit, word (n + 17)) in the Special I/O Unit Area will be written.

I/O	Word address		Bit No.	Type	Bit name	Description
	Head 1 of CS1W-V600C11, CS1W-V600C12, CJ1W-V600C11, or CJ1W-V600C12	Head 2 of CS1W-V600C12 or CJ1W-V600C12				
Input	n + 7	n + 17	15	Unit Status	Unit Busy	Turns ON when there is an ID Sensor Unit error.
			14		Test Mode	Turns ON during Test Mode.
			13		Head Power Supply error	Turns ON when there is an error in the Unit's 24-V power supply or the input power supply.
			12		EEPROM error	Turns ON when there is an error in ID Sensor Unit memory.
			03 to 11		---	Not used
			02		Error End Flag	ON for one scan when processing ends in an error.
			01		Normal End Flag	ON for one scan when processing ends normally.
			00		ID Busy	Turns ON while communications are in progress.

Both ERC and RUN Indicators Lit

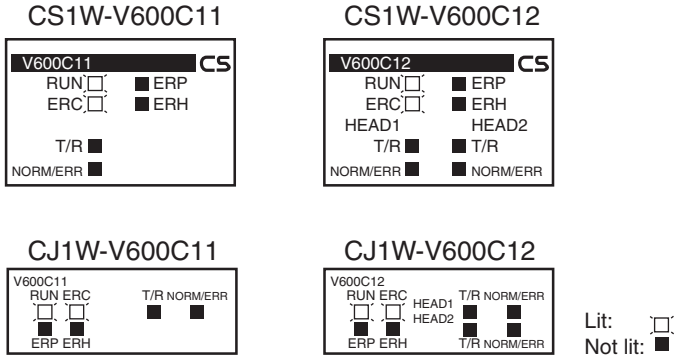

If both the ERC and RUN indicators are lit, an alarm occurred during Unit operation. The Alarm Flags in the Unit Status (word (n + 7)) (and, for a Double-head ID Sensor Unit, word (n + 17)) in the Special I/O Unit Area will be written.

The Unit will recover from these alarms automatically when the cause of the alarm is removed.

Word address		Name of alarm	Meaning	Unit response	Correction
Head 1 of CS1W-V600C11, CS1W-V600C12, CJ1W-V600C11, or CJ1W-V600C12	**Head 2 of CS1W-V600C12 or CJ1W-V600C12**				
n + 7	**n + 17**				
Bit 15		ID Sensor Unit CPU error	A CPU error occurred during ID Sensor Unit operation	Unit operation will stop.	Turn the power supply OFF and ON or turn ON the Special I/O Unit Restart Bit Replace the I/O Sensor Unit if the error persists even though the Unit is reset.

Note First word allocated to Unit in CIO Area: n = CIO 2000 + 10 × unit No.

ERC Indicator Lit and RUN Indicator Not Lit

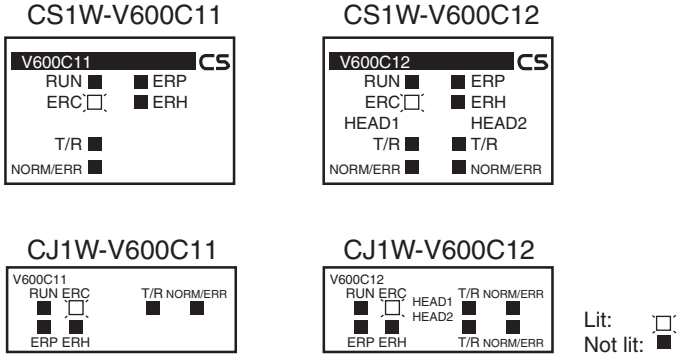

If the ERC indicator is lit and the RUN indicator is not lit, an alarm occurred in the ID Sensor Unit immediately after the power supply was turned ON or immediately after the Unit was restarted as a Special I/O Unit. The Alarm Flags in the Unit Status (word (n + 7)) (and, for a Double-head ID Sensor Unit, word (n + 17)) in the Special I/O Unit Area will be written.

Word address		Name of alarm	Meaning	Unit response	Correction
Head 1 of CS1W-V600C11, CS1W-V600C12, CJ1W-V600C11, or CJ1W-V600C12	**Head 2 of CS1W-V600C12 or CJ1W-V600C12**				
n + 7	**n + 17**				
Bit 15		ID Sensor Unit CPU error	An error occurred in the ID Sensor Unit when the power supply was turned ON or immediately after the Unit was restarted.	Unit operation will stop.	Turn the power supply OFF and ON or turn ON the Special I/O Unit Restart Bit Replace the I/O Sensor Unit if the error persists even though the Unit is reset.
Bit 12		ID Sensor Unit memory error	An error occurred when memory read was read.	Unit operation will stop.	Turn the power supply OFF and ON or turn ON the Special I/O Unit Restart Bit Replace the I/O Sensor Unit if the error persists even though the Unit is reset.

Note First word allocated to Unit in CIO Area: n = CIO 2000 + 10 × unit No.

Error name	Word (n + 8)	Word (n + 9)	Error	Correction
Data Carrier communications error	Bit 12	E070	An error occurred in communications with a Data Carrier, preventing a normal end.	Check for excessive noise. Check the travel speed. Check the distance between the Head and Data Carrier.
Data Carrier verification error	Bit 14	E071	The correct data could not be written to the Data Carrier. (Occurs only when verification is set for a write operation.)	Check the travel speed. (Page 92) Check for excessive noise.
Data Carrier missing error	Bit 10	E072	The communications specification was for a trigger, but there was no Data Carrier in the communications area. The communications specification was for single auto, but the auto wait time expired.	The Head and Data Carrier are too far apart. The axis is out of alignment.
Status Flag	Bit 04	E076	An overflow or underflow occurred for a Calculation Write command. The data did not verify for a Data Check command. The number of writes was exceeded for a Number of Writes Control command. An error occurred while writing for a Copy command.	Check the data settings. Replace the Data Carrier. Make the same checks as for a communications error.
Data Carrier address error	Bit 13	E07A	The Data Carrier address is not correct.	Specify the address correctly. Do not allow processing for the Bit Set, Bit Clear, Mask Bit Write, Calculation Write, or Number of Writes Control command to exceed one page. (Page 59)
Battery low warning	Bit 05	E07B	The life of the battery built into a SRAM Data Carrier has expired.	Replace the Data Carrier.
Head error	Bit 15	E07C	A R/W Head error occurred.	Check 24 V DC input. (CS1W-V600C12 only) Check the R/W Head.
Write protection error	Bit 11	E07D	An attempt was made to write to a write-protected area.	Specify the address and number of bytes correctly. Clear write protection. (Page 61)
Data storage area specification error	Bit 01	No change	The data storage area specification is not correct.	Specify the data storage area specification correctly.
Command error	Bit 00	No change	The command to the ID Sensor Unit is not correct.	Specify the command correctly.

7-3 CPU Unit Errors

The ERH indicator will light when the ID Sensor Unit cannot operate because an error occurred on the I/O bus to the CPU Unit or when data cannot be refreshed as a Special I/O Unit.

Both ERH and RUN Indicators Lit

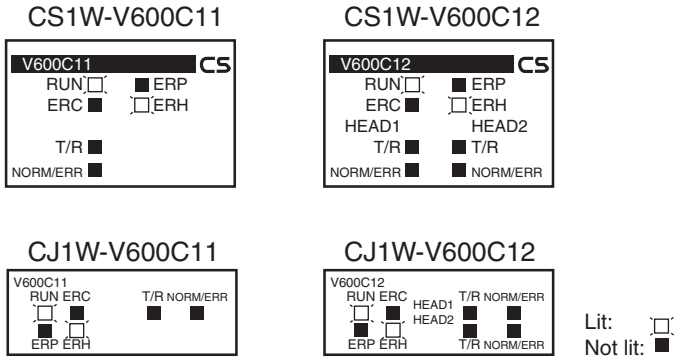

The ERH and RUN indicators will light when an error occurs on the I/O bus or a WDT (watchdog timer) error occurs in the CPU Unit, preventing data from being correctly refreshed for the ID Sensor Unit as a Special I/O Unit. If this happens, either turn the power supply OFF and ON or restart the system. Refer to the *SYSMAC CS-series PLC Operation Manual* for details.

Error name	Error	Unit response
I/O bus error	An error occurred in data transfer between the CPU Unit and the ID Sensor Unit.	Unit operation will stop.
CPU Unit monitor error	An error occurred because there was no response from the CPU Unit.	
CPU Unit WDT error	An error occurred in the CPU Unit.	

ERH Indicator Lit and RUN Indicator Not Lit

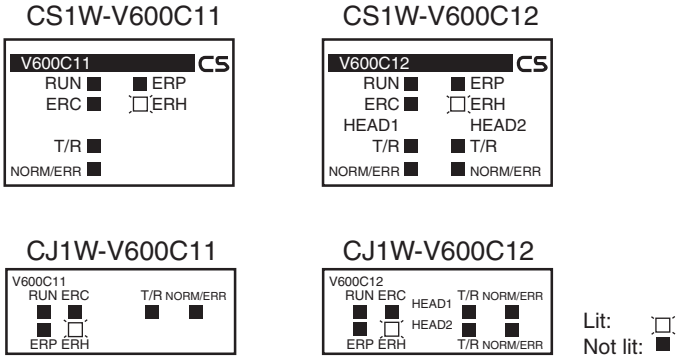

There is an error in the unit number setting for the ID Sensor Unit.

Error name	Error	Unit response
Unit No. duplication	The same unit number is set for more than one Unit or was set to a value that is not between 00 and 95.	Unit operation will stop.
Special I/O Unit setting error	The model of Special I/O Unit registered in the I/O table does not agree with the model of Special I/O Unit mounted in the system.	

7-4 Restarting Special I/O Units

To restart operation after changing settings in the DM Area or after removing the cause of an error, either turn the PLC's power supply OFF and ON or turn ON the Special I/O Unit Restart Bit.

CS-series Special I/O Unit Restart Bits

Bit address	Function	
A50200	Unit 0 Restart Bit	The Unit will be restarted when the corresponding bit is turned ON.
A50201	Unit 1 Restart Bit	
⋮	⋮	
A50215	Unit 15 Restart Bit	
A50300	Unit 16 Restart Bit	
⋮	⋮	
A50715	Unit 95 Restart Bit	

CJ-series Special I/O Unit Restart Bits

Bit address	Function	
A50200	Unit 0 Restart Bit	The Unit will be restarted when the corresponding bit is turned ON.
A50201	Unit 1 Restart Bit	
⋮	⋮	
A50215	Unit 15 Restart Bit	
A50300	Unit 16 Restart Bit	
⋮	⋮	
A50715	Unit 95 Restart Bit	

Note If an error persists even though the power supply is turned OFF and ON or the Special I/O Unit Restart Bit is turned ON, replace the ID Sensor Unit, Power Supply Unit, or CPU Unit.

7-5 Troubleshooting

If an error occurs, first study the situation well, see if the error occurs again, check the relationship to other devices, and otherwise analyze the error. Use the following flowcharts to check errors.

7-5-1 Main Check Flowchart

Use the Main Check Flowchart according to the nature of the error.

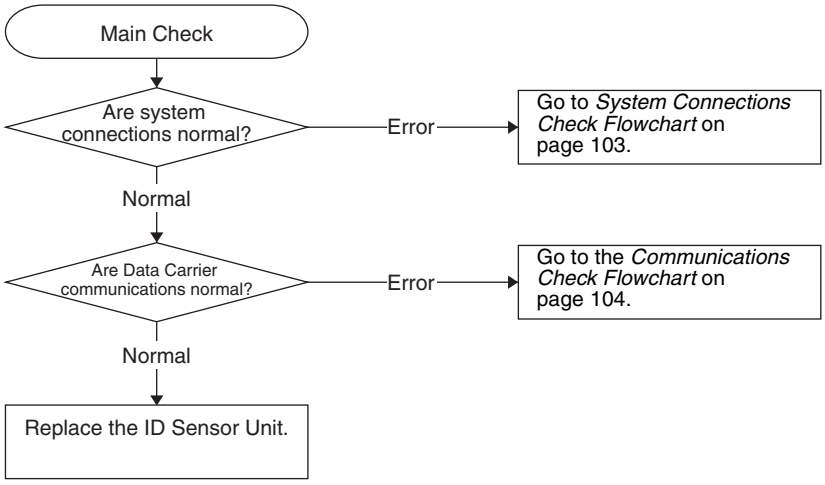

7-5-2 System Connections Check Flowchart

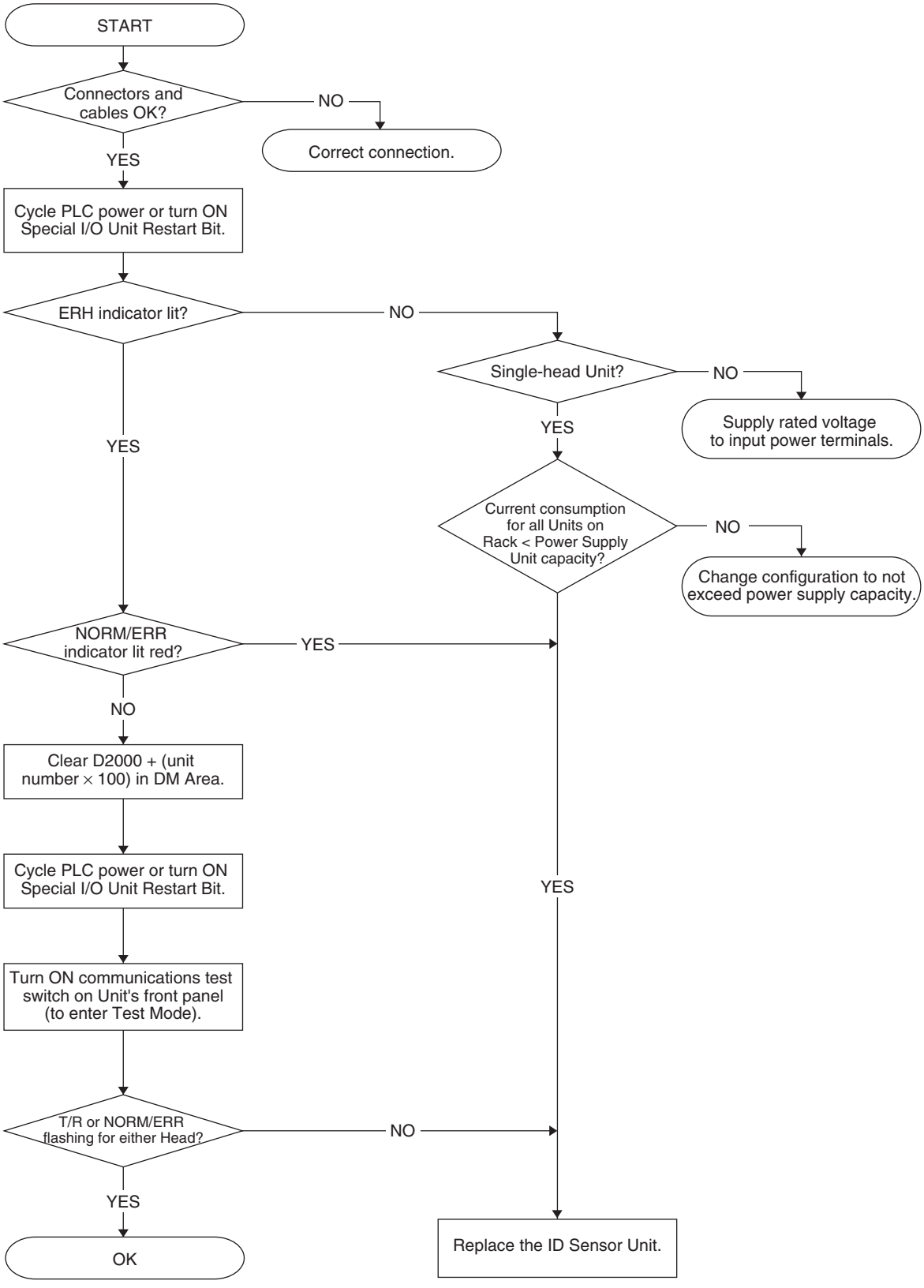

7-5-3 Communications Check Flowchart

Note 1. First word allocated to Unit in DM Area: m = D20000 + 100 × unit No.

2. First word allocated to Unit in CIO Area: n = CIO 2000 + 10 × unit No.

Appendix A
Dimensions

CS1W-V600C11

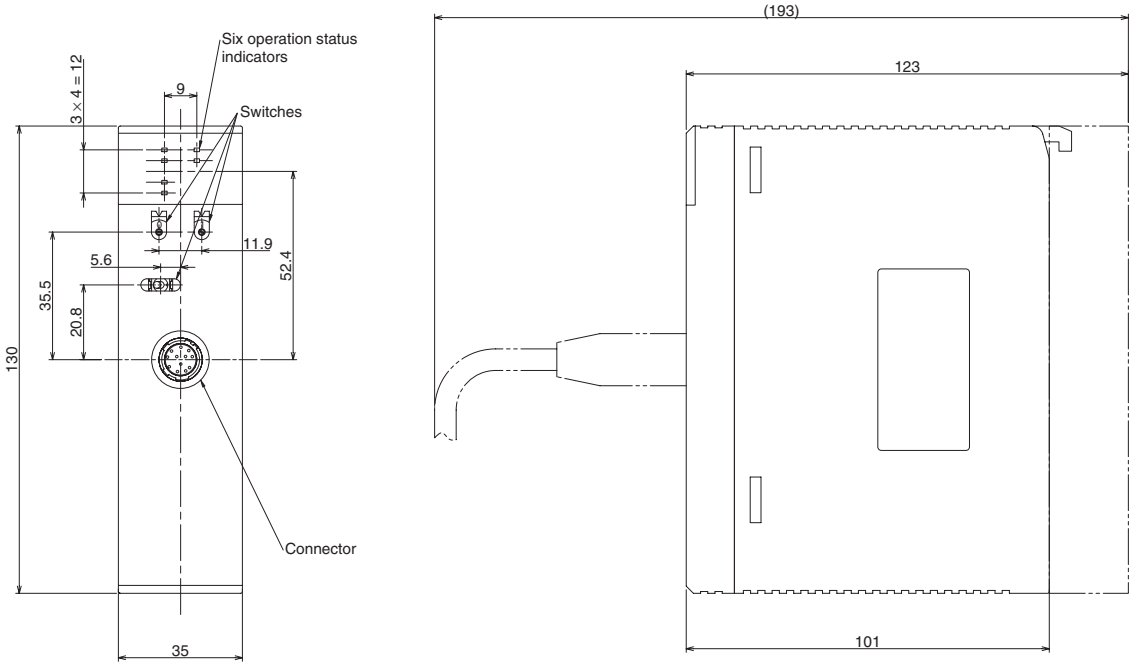

CS1W-V600C12

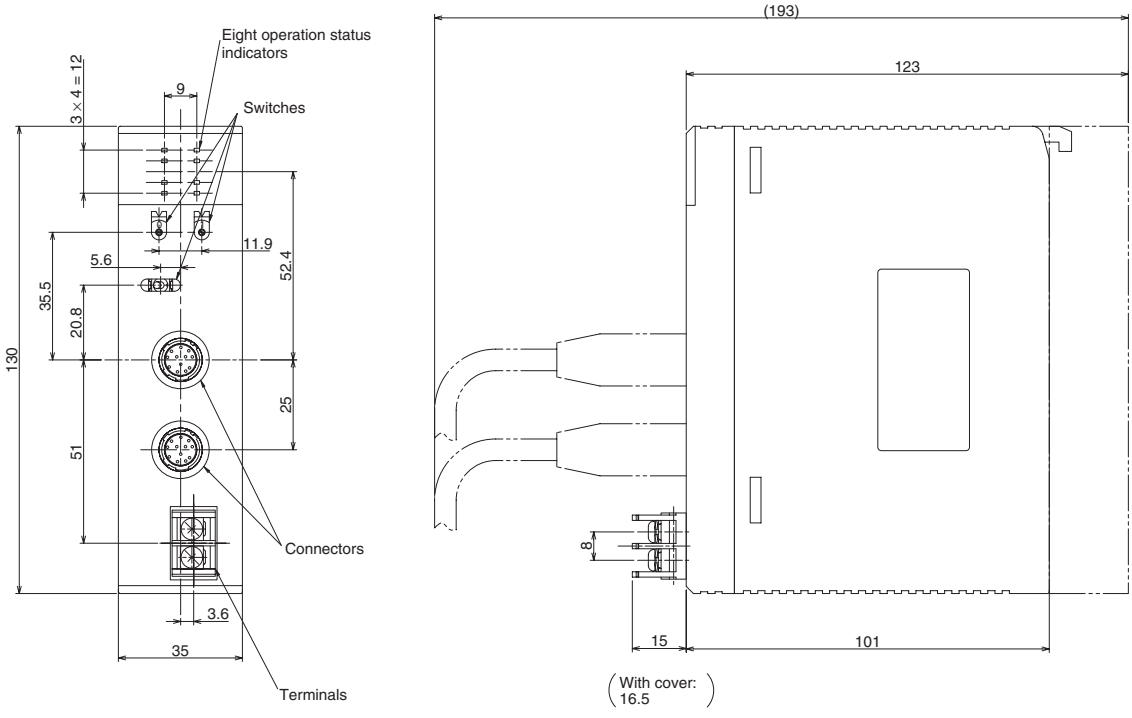

CJ1W-V600C11

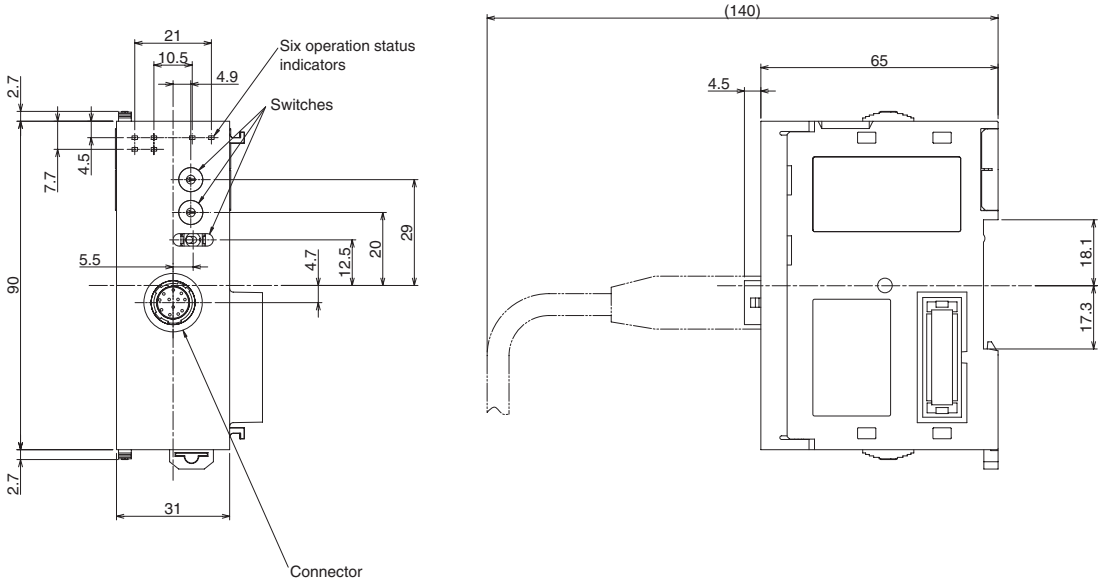

CJ1W-V600C12

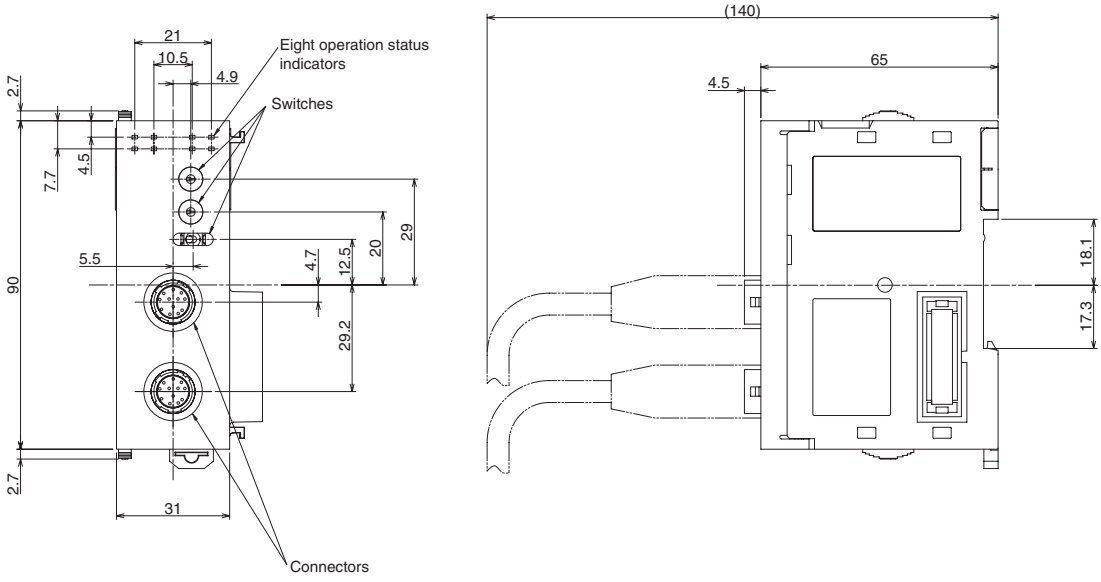

Appendix B
Sample Programming

Read, Communications Specification: Single Auto

Outline

This example shows how to read Data Carrier memory as it approaches the communications area for R/W Head 1.

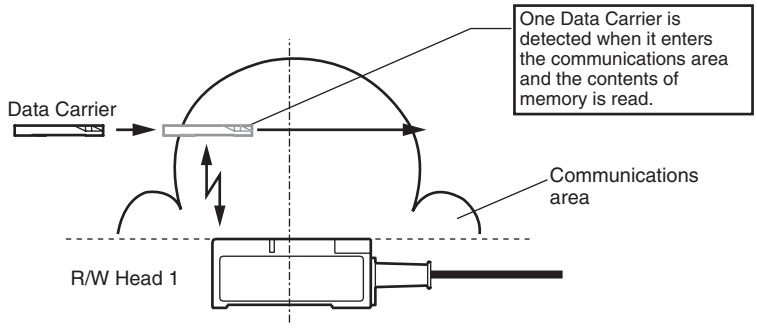

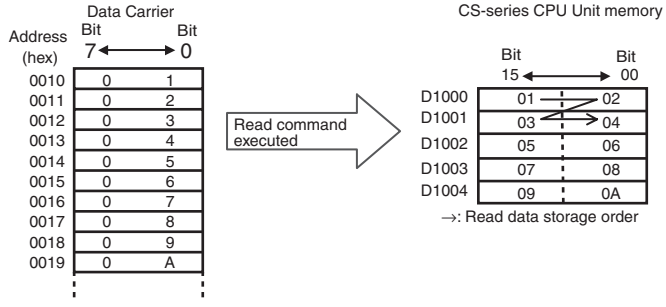

Unit Settings

Item	Setting	Setting location
Unit No.	00	Unit's front panel unit number switches: 00
Operating mode	Normal Mode	Unit's front panel communications test switch: OFF
System Settings	Operating mode switch enabled Write verification setting Communications mode: Communications distance priority	Set in the Special I/O Unit words in DM Area.
Auto Wait Time Setting	Infinite	
Command	Read	Set in the Special I/O Unit Area.
Communications specification	Single auto	
Read data storage order	Leftmost → Rightmost	
Read start address	0010 (hex)	
Number of bytes to read	10 bytes	
Read data storage destination	D1000 to D1004	

First word allocated to Unit in DM Area: m = D20000 + (100 × 0) = D20000

DM address	Contents				Meaning															
					15	14	13	12	11	10	9	8	7	6	5	4	3	2	1	0
D20000	0	0	0	0	Not used				Communications test switch enabled				Verification for writing				Communications mode: Distance			
D20001	0000				Auto Wait Time Setting															

First word allocated to Unit in CIO Area: n = CIO 2000 + (10 × 0) = CIO 2000

Word address	Contents				Meaning															
					15	14	13	12	11	10	9	8	7	6	5	4	3	2	1	0
CIO 2001	0	0	1	0	Command code								Communications specification				Data order			
CIO 2002	00		10		First read address															
CIO 2003	00		0A		Number of read bytes															
CIO 2004	10		00		Read data storage location (rightmost 4 digits)															
CIO 2005	0	0	00		Data storage area				Bank designation (Always 0)				Read data storage location (leftmost 2 digits)							
CIO 2006	00		00		---															

---: Ignored.

Programming Example

When the execution input turns ON, settings are made in the Special I/O Unit Area using the MOV and MOVL instructions and the command is executed. When communications with the Data Carrier have been completed, the Normal End Flag (word (n + 7), bit 01) or Error End Flag (word (n + 7), bit 02) is turned ON.

Read data can be used after the Normal End Flag (word (n + 7), bit 01) has been turned ON.

To end command execution while waiting for the Data Carrier, turn ON the Abort Input.

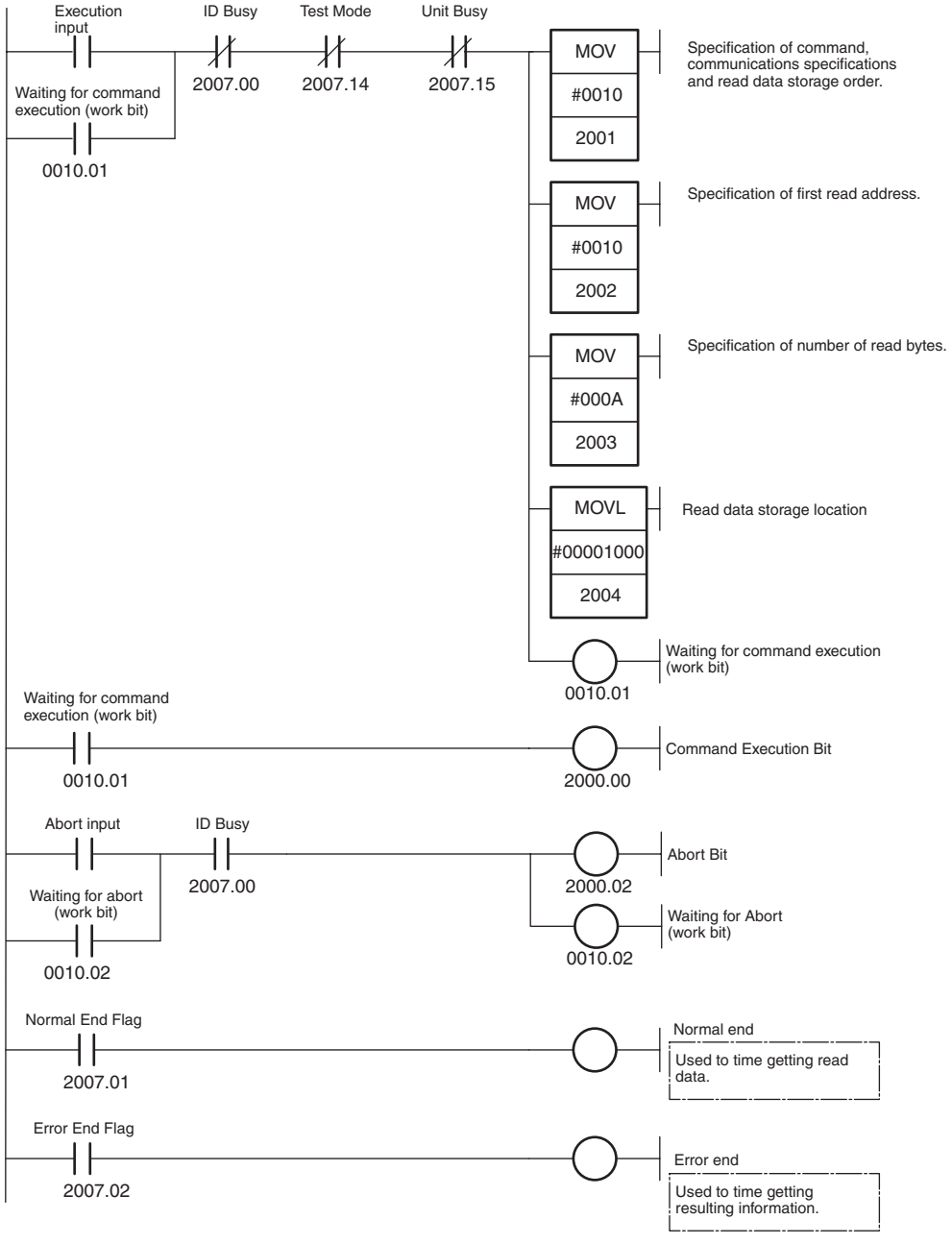

Timing Chart (n = CIO 2000 + (10 × 0) = CIO 2000)

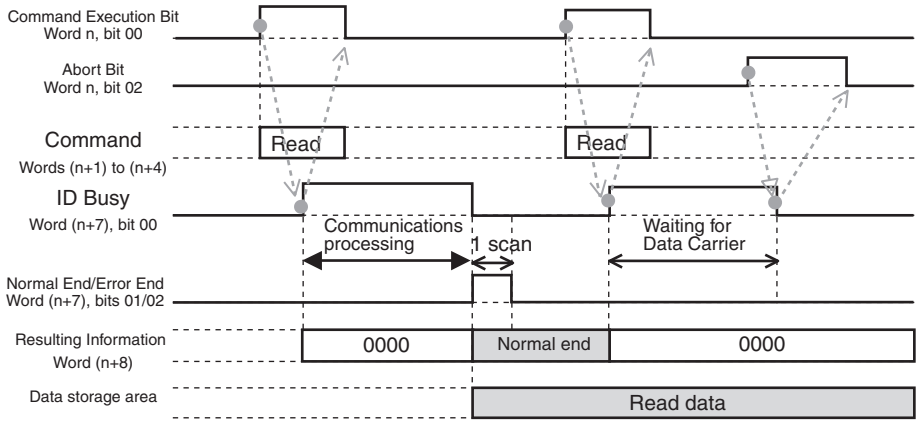

Note 1. If communications with the Data Carrier fail or an error occurs, communications will be aborted at that point, the error flags in the Results Information (word (n + 8)) will turn ON accordingly, and the error code will be placed in the Processing Results Monitor (word (n + 9)). The previous read data will not be changed.

2. If the Abort Bit is turned ON while waiting for a Data Carrier, communications will be aborted at that point. The Results Information (word (n + 8)) will always be 0000 (hex) in this case.

3. To confirm the execution results from the user program, use the ON status of the Normal End Flag or Error End Flag in the Unit Status.

4. Do not turn ON the Command Execution Bit during command execution (i.e., while the ID Busy Flag is ON). It will be ignored.

Read, Communications Specification: Repeat Auto

Outline

This example shows how to repeatedly read the data in the memory of Data Carriers from R/W Head 2. An auto wait time is set so that operation will be ended if a Data Carrier is not detected within a specified period of time.

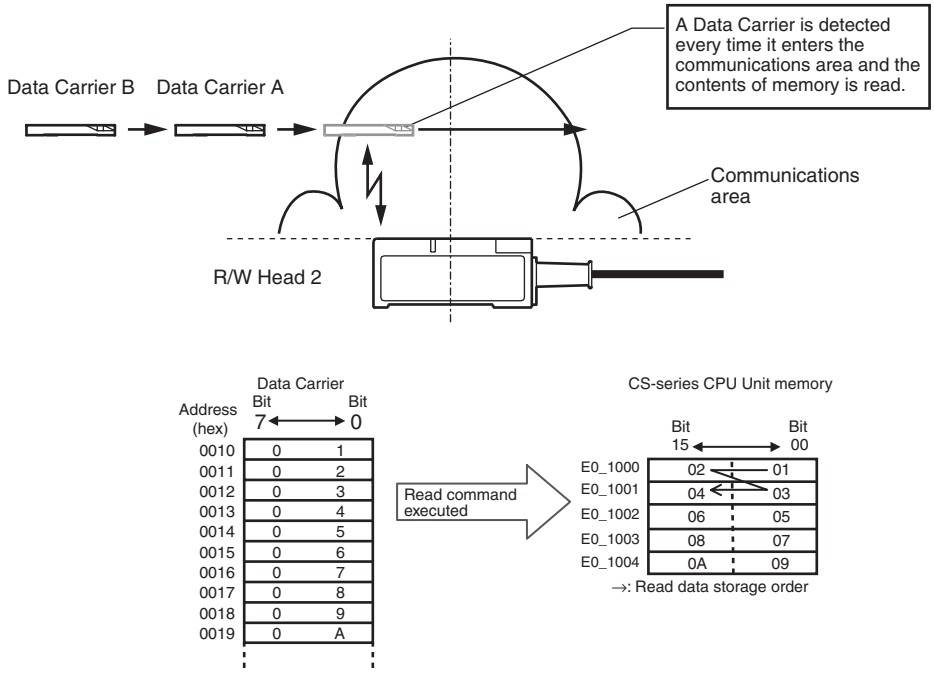

Unit Settings Example

Item	Setting	Setting location
Unit No.	00	Unit's front panel unit number switches: 00
Operating modes	Normal Mode	Unit's front panel communications test switch: OFF
System Settings	Operating mode switch enabled Write verification setting Communications mode: Communications distance priority	Set in the Special I/O Unit words in DM Area.
Auto Wait Time Setting	15 s	
Command	Read	Set in the Special I/O Unit Area.
Communications specification	Repeat auto	
Read data storage order	Rightmost → Leftmost	
Read Start address	0010	
Number of bytes to read	10 bytes	
Read data storage destination	E0_1000 to E0_1004	

First word allocated to Unit in DM Area: m = D20000 + (100 × (0 + 1)) = D20100

DM address	Contents				Meaning															
					15	14	13	12	11	10	9	8	7	6	5	4	3	2	1	0
D20100	0	0	0	0	Not used				Communications test switch enabled				Verification for writing				Communications mode: Distance			
D20101	0150				Auto Wait Time Setting															

First word allocated to Unit in CIO Area: n = CIO 2000 + (10 × (0 + 1)) = CIO 2010

Word address	Contents				Meaning															
					15	14	13	12	11	10	9	8	7	6	5	4	3	2	1	0
CIO 2011	0	0	2	1	Command code								Communications specification				Data order			
CIO 2012	00		10		First read address															
CIO 2013	00		0A		Number of read bytes															
CIO 2014	10		00		Read data storage location (rightmost 4 digits)															
CIO 2015	5	0	00		Data storage area				Bank designation				Read data storage location (leftmost 2 digits)							
CIO 2016	00		00		---															

---: Ignored.

Programming Example

When the execution input turns ON, settings are made in the Special I/O Unit Area using the MOV and MOVL instructions and the command is executed. When communications with the Data Carrier have been completed, the Normal End Flag (word (n + 7), bit 01) or Error End Flag (word (n + 7), bit 02) is turned ON.

Read data can be used after the Normal End Flag (word (n + 7), bit 01) has been ON.

If more than 15 seconds elapse while waiting for the Data Carrier, the operation will be ended.

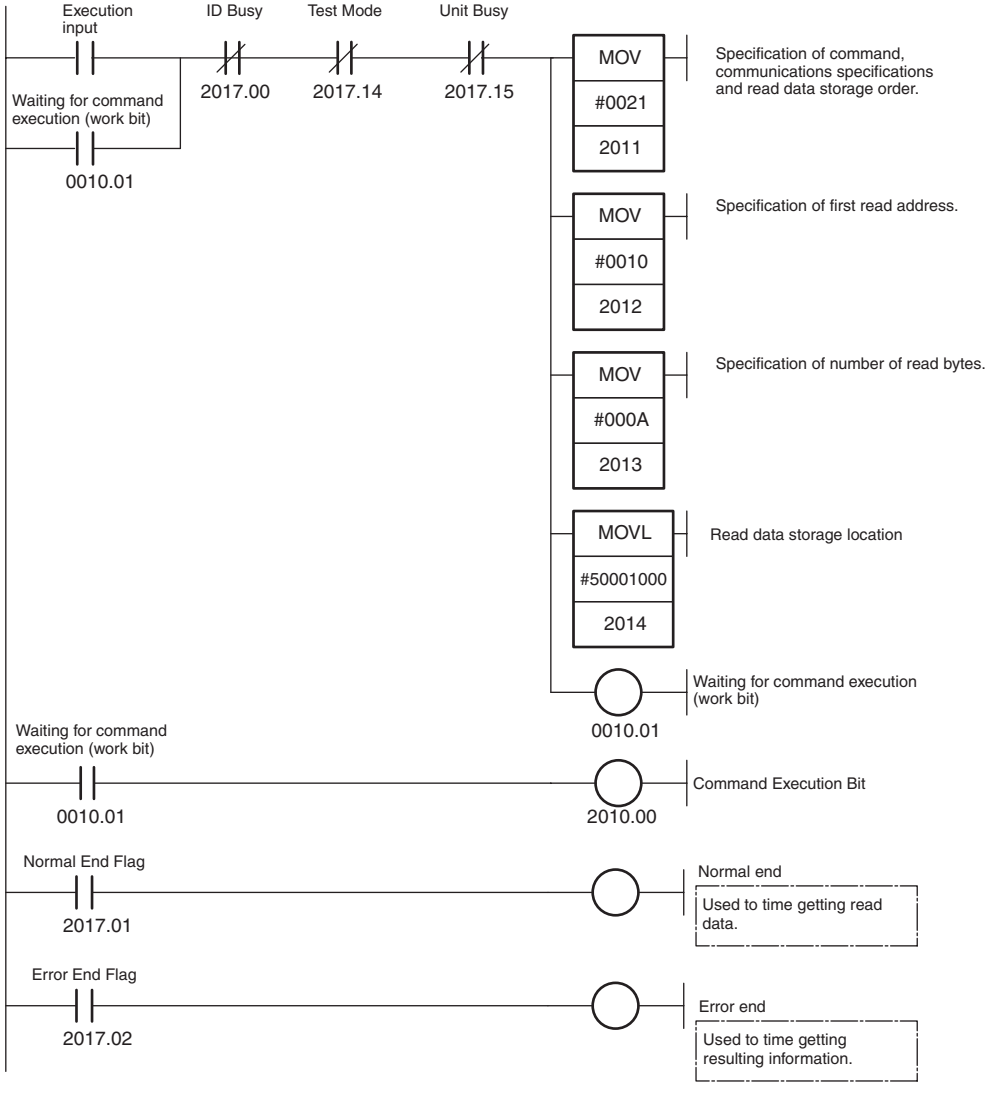

Timing Chart (n = CIO 2000 + (10 × (0 + 1)) = CIO 2010)

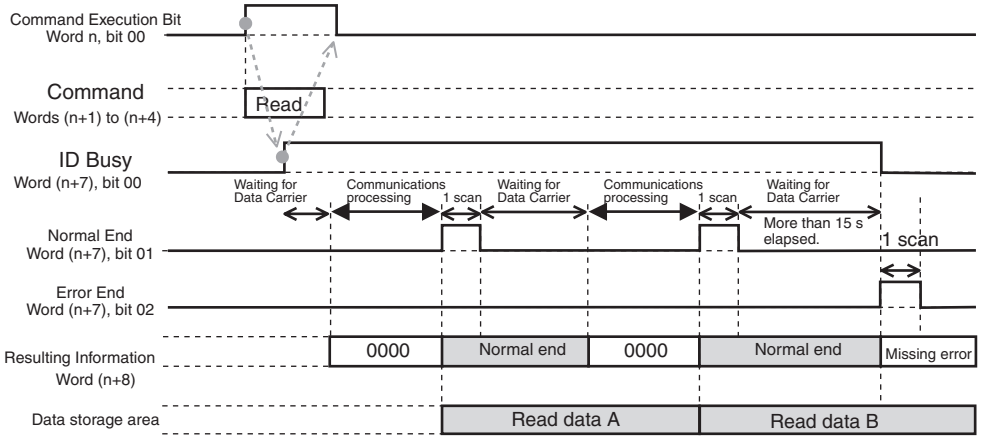

Note 1. If communications with the Data Carrier fail or an error occurs, communications will be aborted at that point, the error flags in the Results Information (word (n + 8)) will turn ON accordingly, and the error code will be placed in the Processing Results Monitor (word (n + 9)). The previous read data will not be changed.

2. If an auto wait time is set and the set time expires while waiting for a Data Carrie, the command operation will be aborted at that point, the Data Carrier Missing Error Flag (word (n + 8), bit 10) in the Results Information will turn ON, and an error code will be placed in the Processing Results Monitor (word (n + 9)).

3. When the communications specification is set to repeat auto, either the Normal End Flag or the Error End Flag will turn ON every scan for consecutive scans. The execution results can be correctly determined by using the ON status of both the Normal End Flag and the Error End Flag in Unit Status.

4. To confirm the execution results from the user program, use the ON status of the Normal End Flag or Error End Flag in the Unit Status.

5. Do not turn ON the Command Execution Bit during command execution (i.e., while the ID Busy Flag is ON). It will be ignored.

Write, Communications Specification: Trigger

Outline

This example shows how to write data to the memory of a Data Carrier in the communications area of R/W Head 1.

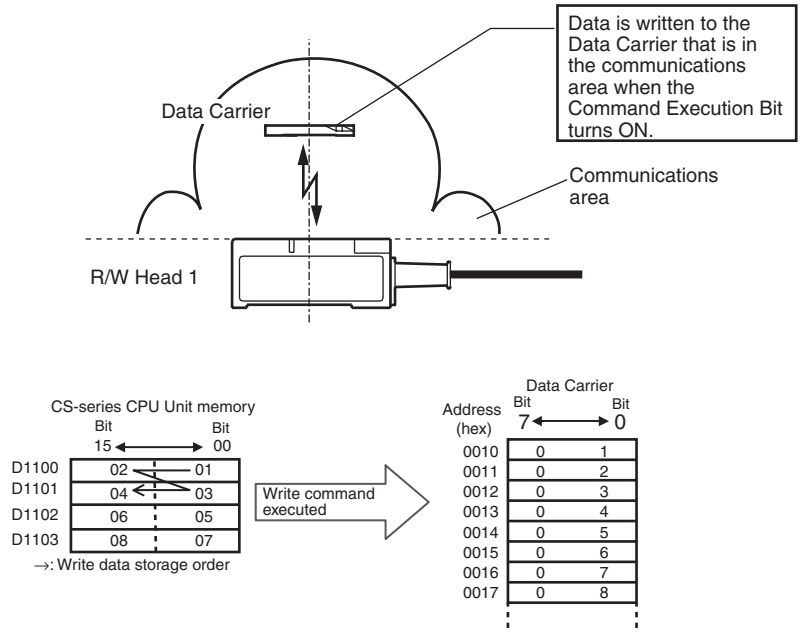

Unit Settings Example

Item	Setting	Setting location
Unit No.	55	Unit's front panel unit number switches: 55
Operating modes	Normal Mode	Unit's front panel communications test switch: OFF
System Settings	Operating mode switch enabled Write verification setting Communications mode: Communications distance priority	Set in the Special I/O Unit words in DM Area.
Auto Wait Time Setting	Infinite	
Command	Write	Set in the Special I/O Unit Area.
Communications specification	Trigger	
Read data storage order	Rightmost → Leftmost	
Read Start address	0010 (hex)	
Number of bytes to read	8 bytes	
Read data storage destination	D1100 to D1103	

First word allocated to Unit in DM Area: m = D20000 + (100 × 55) = D25500

DM address	Contents				Meaning															
					15	14	13	12	11	10	9	8	7	6	5	4	3	2	1	0
D25500	0	0	0	0	Not used				Communications test switch enabled				Verification for writing				Communications mode: Distance			
D25501	0000				Auto Wait Time Setting															

First word allocated to Unit in CIO Area: n = CIO 2000 + (10 × 55) = CIO 2550

Word address	Contents				Meaning															
					15	14	13	12	11	10	9	8	7	6	5	4	3	2	1	0
CIO 2551	01		0	1	Command code								Communications specification				Data order			
CIO 2552	00		10		First write address															
CIO 2553	00		08		Number of write bytes															
CIO 2554	11		00		Read data storage location (rightmost 4 digits)															
CIO 2555	0	0	00		Data storage area				Bank designation (Always 0)				Read data storage location (lefttmost 2 digits)							
CIO 2556	00		00		---															

---: Ignored.

Programming Example

When the execution input turns ON, settings are made in the Special I/O Unit Area using the MOV and MOVL instructions and the command is executed. When communications with the Data Carrier have been completed, the Normal End Flag (word (n + 7), bit 01) or Error End Flag (word (n + 7), bit 02) is turned ON.

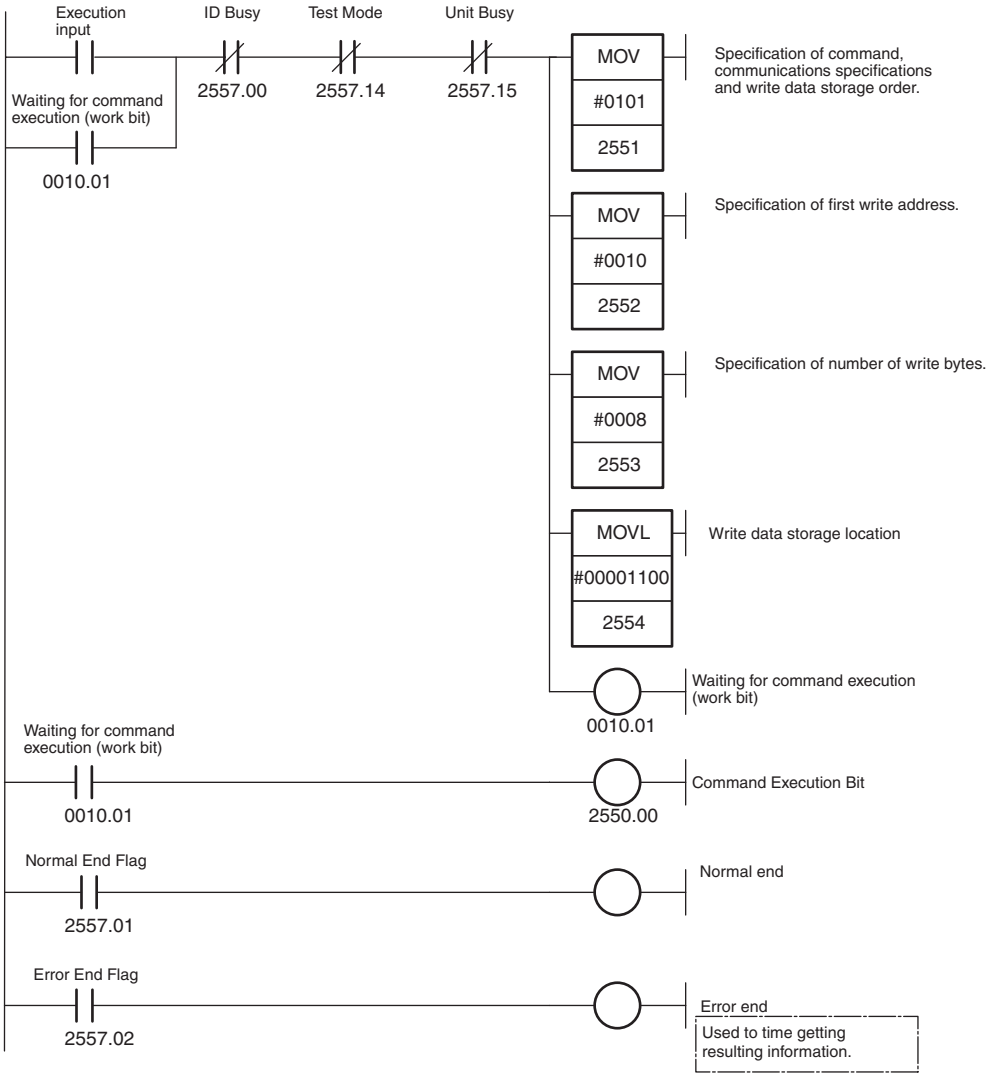

Timing Chart (n = CIO 2000 + (10 × 55) = CIO 2550)

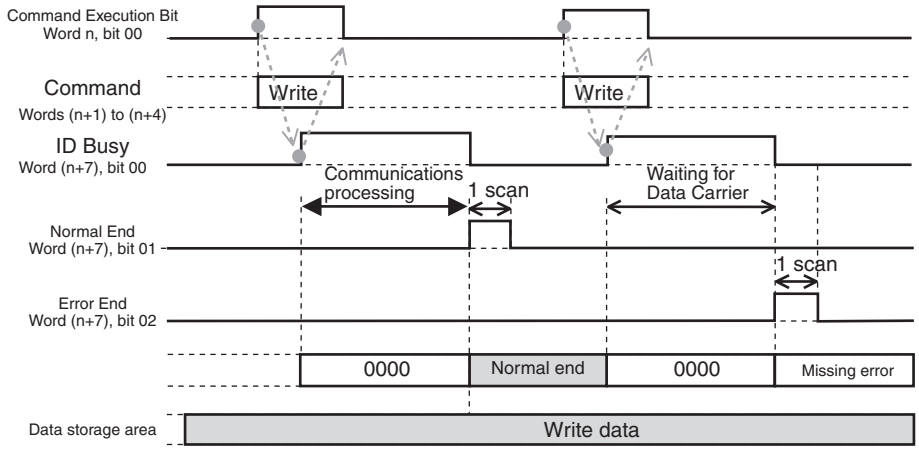

Note 1. To confirm the execution results from the user program, use the ON status of the Normal End Flag or Error End Flag in the Unit Status.

2. Do not turn ON the Command Execution Bit during command execution (i.e., while the ID Busy Flag is ON). It will be ignored.

Copy, Communications Specification: Single Auto

Outline

This example shows how to read data from the memory of Data Carrier A when it approaches R/W Head 1 and then write the data to Data Carrier B in the communications area of R/W Head 2.

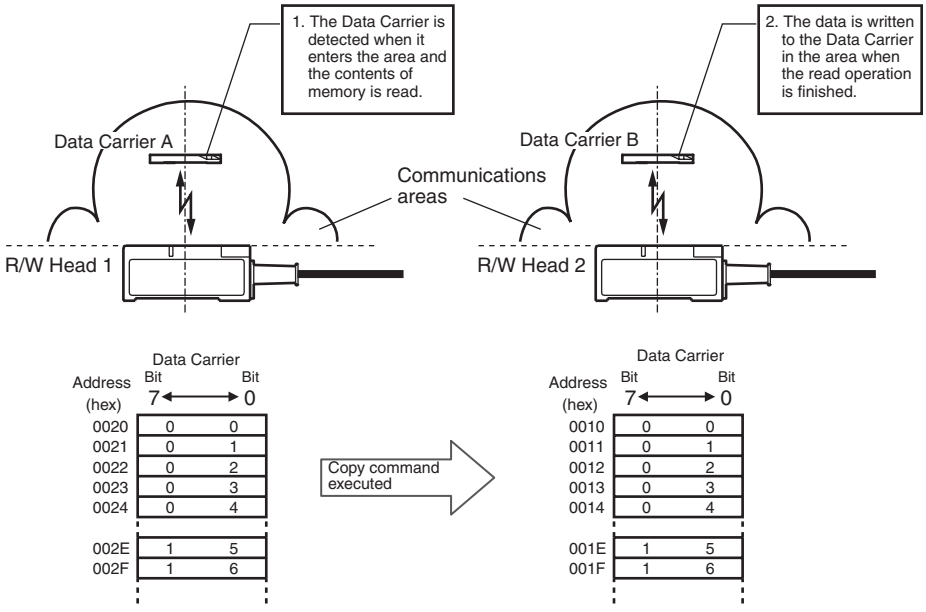

Unit Settings Example

Item	Setting	Setting location
Unit No.	77	Unit's front panel unit number switches: 77
Operating modes	Normal Mode	Unit's front panel communications test switch: OFF
System Settings	Operating mode switch enabled Write verification setting Communications mode: Communications distance priority	Set in the Special I/O Unit words in DM Area.
Auto Wait Time Setting	Infinite	
Command	Copy	Set in the Special I/O Unit Area.
Communications specification	Single auto	
Read start address	0020 (hex)	
Number of read/write bytes	16 bytes	
Write start address	0010 (hex)	

First word allocated to Unit in DM Area: m = D20000 + (100 × 77) = D27700

DM address	Contents				Meaning															
					15	14	13	12	11	10	9	8	7	6	5	4	3	2	1	0
D27700	0	0	0	0	Not used				Communications test switch enabled				Verification for writing				Communications mode: Distance			
D27701	0000				Auto Wait Time Setting															

First Word Allocated to Unit in CIO Area: n = CIO 2000 + (10 × 77) = CIO 2770

Word address	Contents				Meaning															
					15	14	13	12	11	10	9	8	7	6	5	4	3	2	1	0
CIO 2771	09		1	0	Command code								Communications specification				---			
CIO 2772	00		20		First processing address															
CIO 2773	00		10		Number of processing bytes															
CIO 2774	00		00		---															
CIO 2775	0	0	00		---				---				---							
CIO 2776	00		10		Command option															

---: Ignored.

Programming Example

When the execution input turns ON, settings are made in the Special I/O Unit Area using the MOV instruction and the command is executed. Data is read from the memory of Data Carrier A and written to the memory of Data Carrier B. When communications with Data Carrier B have been completed, the Normal End Flag (word (n + 7), bit 01) or Error End Flag (word (n + 7), bit 02) is turned ON.

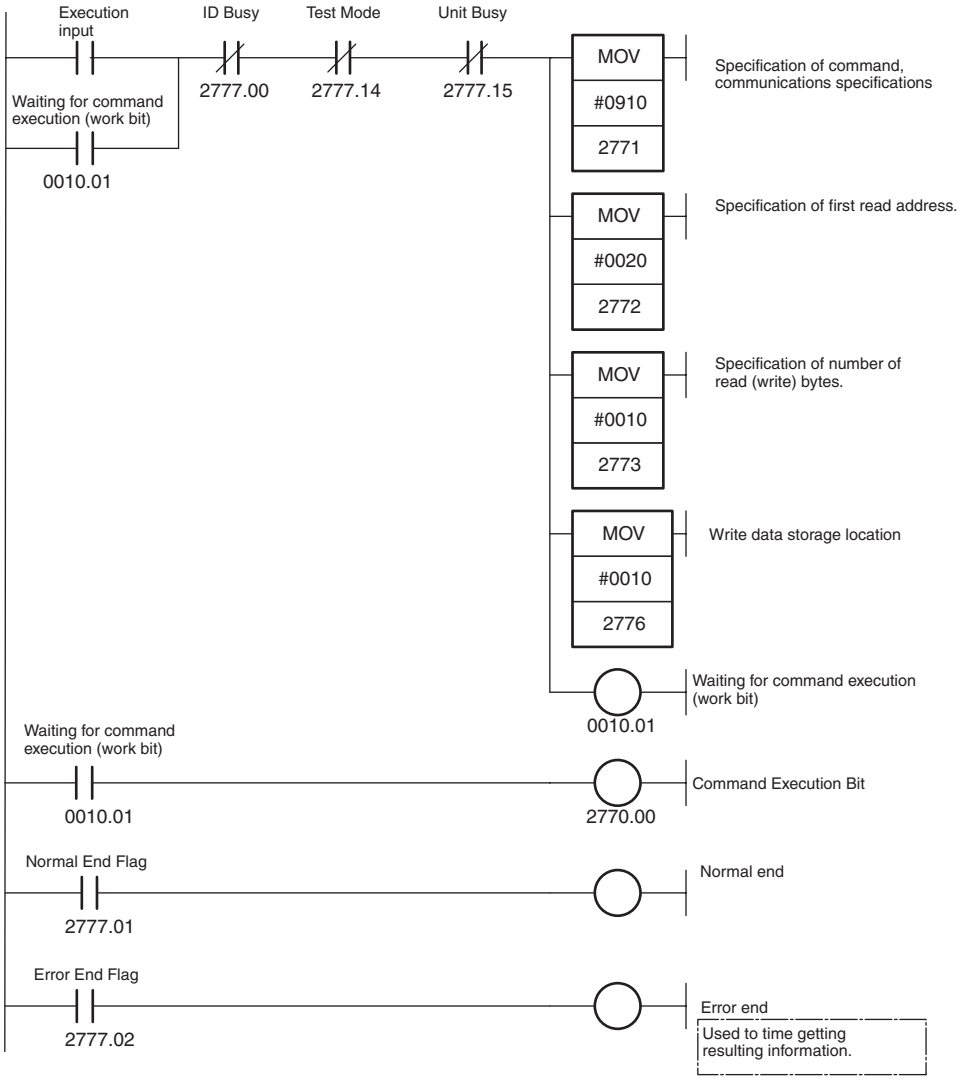

Timing Chart (n = CIO 2000 + (10 × 77) = CIO 2770)

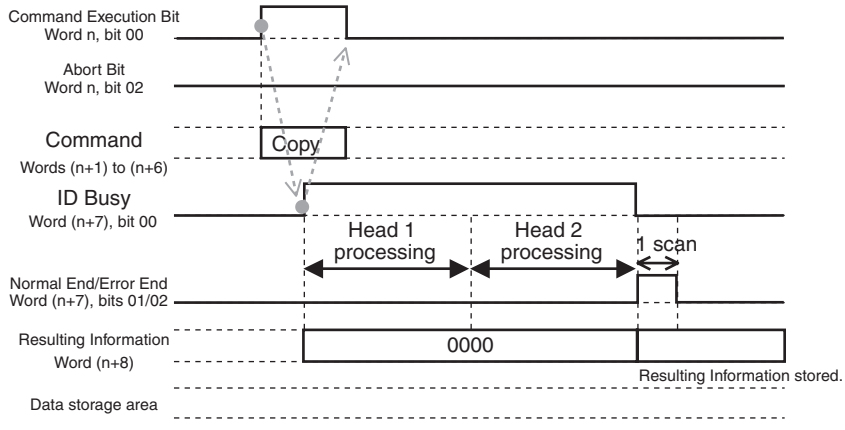

Note 1. To confirm the execution results from the user program, use the ON status of the Normal End Flag or Error End Flag in the Unit Status.

2. Do not turn ON the Command Execution Bit during command execution (i.e., while the ID Busy Flag is ON). It will be ignored.

Appendix C

Data Coding Tables

Special I/O Unit Words Allocated in DM Area
First word allocated to Head 1: m = D20000 + (100 × unit No.)
First word allocated to Head 2: m = D20000 + (100 × (unit No. + 1))

System Settings: D (m) (= D2□□00)

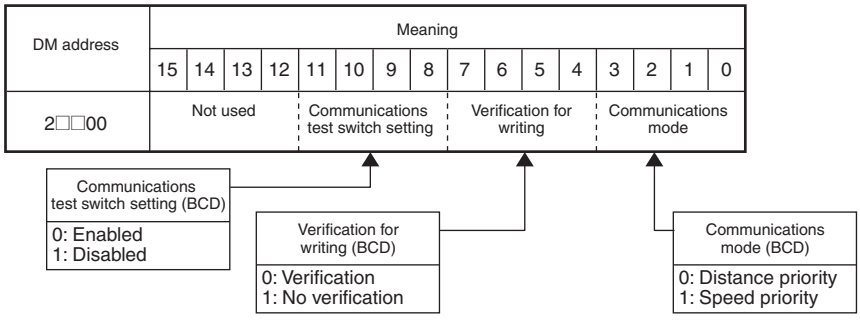

Auto Wait Time Setting: D (m + 1) (= D2□□01)

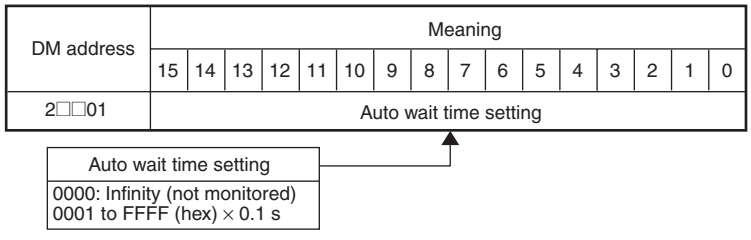

Words Allocated in Special I/O Unit Area in CIO Area
First word allocated to Head 1: n = CIO 2000 + (10 × unit No.)
First word allocated to Head 2: n = CIO 2000 + (10 × (unit No. + 1))

Unit Controls: Word n (= CIO 2□□0)

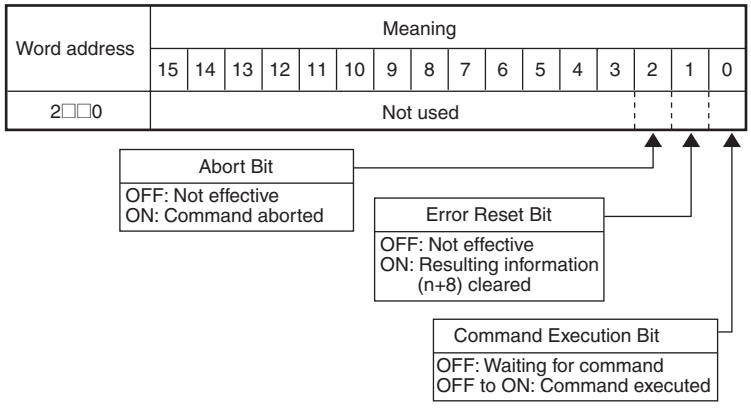

Command: Words (n + 1) to (n + 3) (= CIO 2□□1 to CIO 2□□3)

Word address	Meaning															
	15	14	13	12	11	10	9	8	7	6	5	4	3	2	1	0
2□□1	Command code								Communications specification				Processing specification			

Command code (BCD)	Applicable command
00	Read
01	Write
02	Bit Set
03	Bit Clear
04	Mask Bit Write
05	Calculation Write
06	Data Fill
07	Data Check
08	No. of Write Control
09	Copy

Com spec (BCD)	Applicable command
0:Trigger 1:Auto 2:Repeat auto	Read
	Write
	Bit Set
	Bit Clear
	Mask Bit Write
	Calculation Write
	Data Fill
0:Trigger 1:Auto	Data Check
	No. of Write Control
	Copy

Proc spec (BCD)	Applicable command
Data storage order 0:Upper, lower 1:Lower, upper	Read
	Write
	Bit Set
	Bit Clear
	Mask Bit Write
0:Add 1:Subtract	Calculation Write
0:Bytes 1:Words	Data Fill
0:Calculate 1:Verify	Data Check
0:Add 1:Subtract	No. of Write Control
---	Copy

---: Undefined (No setting required)

Word address	Meaning															
	15	14	13	12	11	10	9	8	7	6	5	4	3	2	1	0
2□□2	Processing address															
2□□3	Number of bytes to process															

No.of bytes (hex)	Applicable command
0001 to 0800	Read Write
0001 to 0004	Bit Set Bit Clear
---	Mask Bit Write
0001 to 0004	Calculation Write
0000 (All) 0001 to 0800	Data Fill
0003 to 0800	Data Check
---	No. of Write Control
0001 to 0800	Copy

Processing address (hex)	Applicable command
0000 to FFFF (Settable addresses depend on Data Carrier.)	Read
	Write
	Bit Set
	Bit Clear
	Mask Bit Write
	Calculation Write
	Data Fill
	Data Check
	No. of Write Control
Read address 0000 to FFFF	Copy

---: Undefined (No setting required)

Data Storage Area: Words (n + 4) to (n + 5) (= CIO 2□□4 to CIO 2□□5)

Word address	Meaning															
	15	14	13	12	11	10	9	8	7	6	5	4	3	2	1	0
2□□4	Data storage word (rightmost 4 digits)															
2□□5	Data storage area				Bank No.				Data storage word (leftmost 2 digits)							

Setting (hex)	Area
0	DM
1	CIO
2	WR
3	HR
4	AR
5	EM
6	TIM
7	CNT

Bank No. (hex)	Applicable area
0	DM
	CIO
	WR
	HR
	AR
0 to C	EM
0	TIM
	CNT

Rightmost 4 digits (BCD)	Leftmost 4 digits (BCD)	Applicable area
000000 to 032767		DM
000000 to 006143		CIO
		WR
000000 to 000511		HR
000000 to 000959		AR
000000 to 032767		EM
000000 to 004095		TIM
		CNT

Command Option: Word (n + 6) (= CIO 2□□6)

Word address	Meaning															
	15	14	13	12	11	10	9	8	7	6	5	4	3	2	1	0
2□□6	Command option															

Command option	Applicable command
---	Read
	Write
	Bit Set
	Bit Clear
Mask specified data 0000 to FFFE	Mask Bit Write
Operation data 0000 to FFFF	Calculation Write
Fill data 0000 to FFFF	Data Fill
---	Data Check
Number of writes 0000 to FFFF	No. of Writes Control
Write address 0000 to FFFF	Copy

---: Not defined (No setting necessary.)

ASCII Code Table

Left digit / Right digit	b8-b5	0000	1001	0010	0011	0100	0101	0110	0111	1000	1001	1010	1011	1100	1101	1110	1111
b4-b1	Column / Row	0	1	2	3	4	5	6	7	8	9	10	11	12	13	14	15
0000	0	NUL	TC_7(DLE)	(SP)	0	@	P	`	p	Undefined	Undefined	Undefined	Undefined	Undefined	Undefined	Undefined	Undefined
0001	1	TC_1(SOH)	DC_1	!	1	A	Q	a	q								
0010	2	TC_2(STX)	DC_2	"	2	B	R	b	r								
0011	3	TC_3(ETX)	DC_3	#	3	C	S	c	s								
0100	4	TC_4(EOT)	DC_4	$	4	D	T	d	t								
0101	5	TC_5(NEQ)	TC_8(NAK)	%	5	E	U	e	u								
0110	6	TC_6(ACK)	TC_9(SYN)	&	6	F	V	f	v								
0111	7	BEL	TC_{10}(ETB)	'	7	G	W	g	w								
1000	8	FE_0(BS)	CAN	(	8	H	X	h	x								
1001	9	FE_1(HT)	EM	)	9	I	Y	i	y								
1010	10	FE_2(LF)	SUB	*	:	J	Z	j	z								
1011	11	FE_3(VT)	ESC	+	;	K	[	k	{								
1100	12	FE_4(FF)	IS_4(FS)	,	<	L	\	l	|								
1101	13	FE_5(CR)	IS_3(GS)	–	=	M	]	m	}								
1110	14	S0	IS_2(RS)	.	>	N	^	n	-								
1111	15	S1	IS_1(US)	/	?	O	_	o	DEL								

Revision History

A manual revision code appears as a suffix to the catalog number on the front cover of the manual.

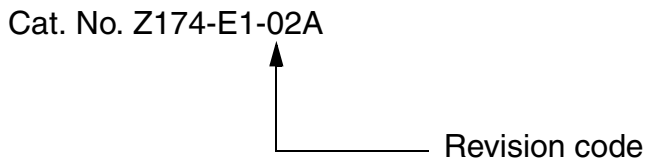

The following table outlines the changes made to the manual during each revision. Page numbers refer to the previous version.

Revision code	Date	Revised content
01	February 2003	Original production
02	March 2004	**Page 10:** Voltage changed to 26 for internal current consumption. **Page 24:** Information on number of Unit per Rack changed.
02A	December 2004	Warranty and liability information added to beginning of manual, signal word and alert symbols modified, and style of safety information in the body of the manual changed.

OMRON CORPORATION
Industrial Automation Company

Application Sensors Division
Sensing Devices & Components Division H.Q.
Shiokoji Horikawa, Shimogyo-ku,
Kyoto, 600-8530 Japan
Tel: (81)75-344-7068/Fax: (81)75-344-7107

Regional Headquarters

OMRON EUROPE B.V.
Sensor Business Unit,
Carl-Benz-Str. 4, D-71154 Nufringen,
Germany
Tel: (49)7032-811-0/Fax: (49)7032-811-199

OMRON ELECTRONICS LLC
1 East Commerce Drive, Schaumburg, IL 60173
U.S.A.
Tel: (1)847-843-7900/Fax: (1)847-843-8568

OMRON ASIA PACIFIC PTE. LTD.
83 Clemenceau Avenue,
#11-01, UE Square,
239920 Singapore
Tel: (65)6835-3011/Fax: (65)6835-2711

OMRON CHINA CO., LTD. BEIJING OFFICE
Room 1028, Office Building,
Beijing Capital Times Square,
No. 88 West Chang'an Road,
Beijing, 100031 China
Tel: (86)10-8391-3005/Fax: (86)10-8391-3688

OMRON

Authorized Distributor:

Cat. No. Z174-E1-02A

Note: Specifications subject to change without notice

Printed in Japan
1204-0.5C (0203) (M)